DOCUMENT RESUME

ED 422 489 CE 077 012

TITLE	Laser Machining Series. Educational Resources for the Machine Tool Industry. Course Syllabi, Instructor's Handbook, [and] Student Laboratory Manual.
INSTITUTION	Texas State Technical Coll. System, Waco.
SPONS AGENCY	Office of Vocational and Adult Education (ED), Washington, DC.; National Science Foundation, Arlington, VA. Div. of Undergraduate Education.
PUB DATE	1998-00-00
NOTE	1206p.; For related documents, see ED 401 431-445 and CE 077 005-017. Product of the MASTER (Machine Tool Advanced Skills Technology Educational Resources) Consortium.
CONTRACT	DUE-9553716
AVAILABLE FROM	Online at http://machinetool.tstc.edu
PUB TYPE	Guides - Classroom - Learner (051) -- Guides - Classroom - Teacher (052)
EDRS PRICE	MF09/PC49 Plus Postage.
DESCRIPTORS	Behavioral Objectives; Competency Based Education; *Computer Assisted Design; *Computer Assisted Manufacturing; Course Descriptions; Curriculum Design; Curriculum Guides; *Drafting; Educational Certificates; Electronics; Instructional Materials; Job Skills; Job Training; *Lasers; Learning Activities; Learning Modules; Machine Tool Operators; Machine Tools; *Machinists; *Numerical Control; Optics; Postsecondary Education; Student Certification; Student Evaluation; Teaching Methods; Technical Education; Troubleshooting
IDENTIFIERS	DACUM Process

ABSTRACT

This package consists of course syllabi, an instructor's handbook, and a student laboratory manual for a 1-year vocational training program to prepare students for entry-level employment as laser machining technicians. The program was developed through a modification of the DACUM (Developing a Curriculum) technique. The course syllabi volume begins with the MASTER (Machine Tool Advanced Skills Technology Educational Resources) Program Consortium competency profile with 10 duties (and supporting technical workplace competencies): practice laser safety; apply mathematical concepts; perform measurement and inspection; troubleshoot industrial electronics and control; apply concepts of modern optics; perform computer numerical control machining; investigate industrial laser systems; perform computer-aided drafting; perform laser materials processing; and perform computer-aided manufacturing. The first volume contains the justification, documentation, and course syllabi for the courses. Each syllabus contains the following: course description; prerequisites; course objectives; required course materials; methods of instruction; lecture outline; lab outline; Secretary's Commission on Achieving Necessary Skills competencies taught; and appropriate reference materials. The two-volume instructor's handbook consists of technical training modules that include some or all of the following: time required; duty; task; objective(s); instructional materials list; references; student preparation; introduction; presentation outline; practical application; evaluation; summary; and attachments, including handouts, laboratory worksheets, and self-assessment with answer key. The

+++++ ED422489 Has Multi-page SFR---Level=1 +++++
handbook is arranged by duty grouping, with technical modules developed for each task box on the competency profile. The student laboratory manual contains a DACUM chart and learning modules for duties A-J. Each module in the student manual includes some or all of the following: objectives, outline, laboratory exercises, laboratory aids, and handouts. (YLB)

****
* Reproductions supplied by EDRS are the best that can be made *
* from the original document. *
****

ED 422 489

Laser Machining Series
Educational Resources for the Machine Tool Industry
Course Syllabi
Instructor's Handbook
Student Laboratory Manual

U.S. DEPARTMENT OF EDUCATION
Office of Educational Research and Improvement
EDUCATIONAL RESOURCES INFORMATION
CENTER (ERIC)
☑ This document has been reproduced as received from the person or organization originating it.
☐ Minor changes have been made to improve reproduction quality.
• Points of view or opinions stated in this document do not necessarily represent official OERI position or policy.

BEST COPY AVAILABLE

CE 077 012

MACHINE TOOL ADVANCED SKILLS TECHNOLOGY EDUCATIONAL RESOURCES

MASTER

a consortium of educators and industry

EDUCATIONAL RESOURCES FOR THE MACHINE TOOL INDUSTRY

Laser Machining Series

COURSE SYLLABI

Supported by the National Science Foundation's Advanced Technological Education Program

MACHINE TOOL ADVANCED SKILLS TECHNOLOGY EDUCATIONAL RESOURCES

MASTER

a consortium of educators and industry

EDUCATIONAL RESOURCES FOR THE MACHINE TOOL INDUSTRY

Laser Machining Series

COURSE SYLLABI

Supported by the National Science Foundation's Advanced Technological Education Program

This material is based upon work supported by the
National Science Foundation under Grant No. DUE-9553716

National Science Foundation
Advanced Technological Education Program

"Any opinions, findings, and conclusions or recommendations expressed in this material are those of the author(s) and do not necessarily reflect the views of the Foundation."

ACKNOWLEDGEMENTS

This project was made possible by the cooperation and direct support of the following organizations:

National Science Foundation - Division of Undergraduate Education
MASTER Consortia of Employers and Educators

MASTER has built upon the foundation which was laid by the Machine Tool Advanced Skills Technology (MAST) Program. The MAST Program was supported by the U.S. Department of Education - Office of Vocational and Adult Education. Without this prior support MASTER could not have reached the level of quality and quantity that is contained in these project deliverables.

MASTER DEVELOPMENT CENTERS
Augusta Technical Institute - Central Florida Community College - Itawamba Community College - Moraine Valley Community College - San Diego City College (CACT) - Springfield Technical Community College - Texas State Technical College

INDUSTRIES
AB Lasers - AIRCAP/MTD - ALCOA - American Saw - AMOCO Performance Products - Automatic Switch Company - Bell Helicopter - Bowen Tool - Brunner - Chrysler Corp. - Chrysler Technologies - Conveyor Plus - Darr Caterpillar - Davis Technologies - Delta International - Devon - D. J. Plastics - Eaton Leonard - EBTEC - Electro-Motive - Emergency One - Eureka - Foster Mold - GeoDiamond/Smith International - Greenfield Industries - Hunter Douglas - Industrial Laser - ITT Engineered Valve - Kaiser Aluminum - Krueger International. - Laser Fare - Laser Services - Lockheed Martin - McDonnell Douglas - Mercury Tool - NASSCO - NutraSweet - Rapistan DEMAG - Reed Tool - ROHR, International - Searle - Solar Turbine - Southwest Fabricators - Smith & Wesson - Standard Refrigeration - Super Sagless - Taylor Guitars - Tecumseh - Teledyne Ryan - Thermal Ceramics - Thomas Lighting - FMC, United Defense - United Technologies Hamilton Standard

COLLEGE AFFILIATES
Aiken Technical College - Bevil Center for Advanced Manufacturing Technology - Chicago Manufacturing Technology Extension Center - Great Lakes Manufacturing Technology Center - Indiana Vocational Technical College - Milwaukee Area Technical College - Okaloosa-Walton Community College - Piedmont Technical College - Pueblo Community College - Salt Lake Community College - Spokane Community College - Texas State Technical Colleges at Harlington, Marshall, Sweetwater

FEDERAL LABS
Jet Propulsion Lab - Lawrence Livermore National Laboratory - L.B.J. Space Center (NASA) - Los Alamos Laboratory - Oak Ridge National Laboratory - Sandia National Laboratory - Several National Institute of Standards and Technology Centers (NIST) - Tank Automotive Research and Development Center (TARDEC) - Wright Laboratories

SECONDARY SCHOOLS
Aiken Career Center - Chicopee Comprehensive High School - Community High School (Moraine, IL) - Connally ISD - Consolidated High School - Evans High - Greenwood Vocational School - Hoover Sr. High - Killeen ISD - LaVega ISD - Lincoln Sr. High - Marlin ISD - Midway ISD - Moraine Area Career Center - Morse Sr. High - Point Lamar Sr. High -

ERIC

Pontotoc Ridge Area Vocational Center - Putnam Vocational High School - San Diego Sr. High - Tupelo-Lee Vocational Center - Waco ISD - Westfield Vocational High School

ASSOCIATIONS

American Vocational Association (AVA) - Center for Occupational Research and Development (CORD) - CIM in Higher Education (CIMHE) - Heart of Texas Tech-Prep - Midwest (Michigan) Manufacturing Technology Center (MMTC) - National Coalition For Advanced Manufacturing (NACFAM) - National Coalition of Advanced Technology Centers (NCATC) - National Skills Standards Pilot Programs - National Tooling and Machining Association (NTMA) - New York Manufacturing Extension Partnership (NYMEP) - Precision Metalforming Association (PMA) - Society of Manufacturing Engineers (SME) - Southeast Manufacturing Technology Center (SMTC)

MASTER PROJECT EVALUATORS

Dr. James Hales, East Tennessee State University and William Ruxton, formerly with the National Tooling and Machine Association (NTMA)

NATIONAL ADVISORY COUNCIL MEMBERS

The National Advisory Council has provided input and guidance into the project since the beginning. Without their contributions, MASTER could not have been nearly as successful as it has been. Much appreciation and thanks go to each of the members of this committee from the project team.
Dr. Hugh Rogers-Dean of Technology-Central Florida Community College
Dr. Don Clark-Professor Emeritus-Texas A&M University
Dr. Don Edwards-Department of Management-Baylor University
Dr. Jon Botsford-Vice President for Technology-Pueblo Community College
Mr. Robert Swanson-Administrator of Human Resources-Bell Helicopter, TEXTRON
Mr. Jack Peck-Vice President of Manufacturing-Mercury Tool & Die
Mr. Don Hancock-Superintendent-Connally ISD

SPECIAL RECOGNITION

Dr. Hugh Rogers recognized the need for this project, developed the baseline concepts and methodology, and pulled together industrial and academic partners from across the nation into a solid consortium. Special thanks and singular congratulations go to Dr. Rogers for his extraordinary efforts in this endeavor.

Dr. Don Pierson served as the Principal Investigator for the first two years of MASTER. His input and guidance of the project during the formative years was of tremendous value to the project team. Special thanks and best wishes go to Dr. Pierson during his retirement and all his worldly travels.

All findings and deliverables resulting from MASTER are primarily based upon information provided by the above companies, schools and labs. We sincerely thank key personnel within these organizations for their commitment and dedication to this project. Including the national survey, more than 2,800 other companies and organizations participated in this project. We commend their efforts in our combined attempt to reach some common ground in precision manufacturing skills standards and curriculum development.

MASTER DEVELOPMENT CENTER, SPRINGFIELD, MA
Center for Business and Technology
Springfield Technical Community College

Dr. Andrew M. Scibelli, President
Springfield Technical Community College

Dr. Thomas E. Holland, Vice President
Center for Business and Technology

One Armory Square
Springfield, MA 01105
College phone: 413/781-7822, fax: 413/781-5805
Center phone: 413/781-1314, fax:413/739-5066
e-mail: tholland@stccadmin.stcc.mass.edu

Manufacturing in New England

According to a 1994 survey from the U.S. Bureau of Labor Statistics, approximately 17% of the employment in New England is manufacturing-related, 32% is service industry, 22% is trade industry, and 29% are other industries. Recent studies show that there are four major areas of emerging growth in technical employment: (1) telecommuncations, (2) biotechnology, (3) environmental technology, and (4) advanced manufacturing technology. Telecommunications, environmental technology and biotechnology are among the top four new growth industries of the region, now constituting a total of more than 205,000 new jobs (NEBHE, 1994). While manufacturing -- long a primary sector of the New England economy -- has declined in the post-cold war era, it still comprises roughly 20% of the employment base of the six-state region. The nature of manufacturing in New England, however, is changing in terms of the technologies of design and production, the materials used, and the products developed. The application of *photonics*, which includes laser machining, is a key emerging technology inherent in all four of the above industries.

Springfield Technical Community College and the Center for Business and Technology

Springfield Technical Community College (STCC) is a public post-secondary institution located within an hour's drive to over 750 metal-machining, optics and photonics manufacturing firms in Massachusetts and Connecticut. The only technical college among the fifteen community colleges in the Commonwealth of Massachusetts, the College is situated between two large urban, disadvantaged communities and serves a highly diverse student body: over 26% of its students are minority, 52% are female, and the average age of all STCC students is twenty-seven. STCC's Advanced Technology Center (ATC) has close to $8 million in technical facilities and equipment in the areas of laser-electro optics, electronics, mechanical technologies (CAD, CNC, CAM), computer-integrated manufacturing (CIM), environmental technology, and the most current computer hardware and software to support manufacturing-related training. STCC also employs a cadre of faculty experts in these technologies who enable the ATC to conduct industry assessments, technical consulting, and industry-specific contract training for the more than 300 small- and medium-sized companies throughout western Massachusetts and Connecticut. The majority of client companies are primary suppliers to the hundreds of defense contractors in New England, including such major firms as United Technologies, Pratt & Whitney, General Electric, Raytheon, and Lockheed-Martin.

Development Team

- **Project Director:** Thomas E. Holland, Ph.D., Vice President of the STCC Center for Business and Technology, served as overall director for the MASTER project.
- **Co-Project Directors**: Gary J. Masciadrelli, MSME, Department Chairman of the STCC Mechanical Engineering Technology Department, and Nicholas M. Massa, MSEE, Program Coordinator for the Laser Electro-Optics Technology program, shared programmatic responsibility for conducting industry assessment, designing curricula, administering the pilot program, and developing skill standards and course/program materials for the Laser Machining component of the MASTER project.

Introduction

MASTER research indicates that individuals working as Laser Machinists will preferably have received at least one year of structured training and education in technical courses in the areas of laser machining. This training may have been conducted in a vocational institution or college.

In this one year program, the students progress through a series of courses designed to both educate and train students with knowledge and skills in areas such as technical mathematics, computer numerical control, metrology, laser technology and applications, optical systems, and industrial electronics and controls, CAD, and CAM skills. Students receive a wide range of training which enables them to seek jobs in many different manufacturing areas. The Laser Machinist Program at Springfield Technical Community College has been training Laser Machinists for many years and works closely with advisory committee members to make sure that the skills being taught are the skills needed in industry. Students who complete this course of study receive certificates from Springfield Technical. The Laser Machining Department worked closely with the MASTER staff, made every effort to assist the MASTER staff with research, and currently seek adoption of the recommended MASTER materials for their Laser Machining Department students. The Laser Machining Department at Springfield Technical is recognized throughout Massachusetts by large and small manufacturing companies as a premier source for entry-level Laser Machinists. Upon completion, students are able to interpret complex drawings, select the correct materials, and perform all necessary laser processes. The curriculum has been designed to prepare students to enter the workforce as entry-level Laser Machinists. Laboratory work is emphasized with actual industrial equipment in order to prepare students for interesting, rewarding work in a wide variety of industries. The Laser Machining Department has a unique blend of theoretical knowledge and practical application which directly corresponds to modern uses in manufacturing.

After many interviews with practitioners from industry and discussions with educators, managers, supervisors, and others involved with machine-related occupations (specifically laser machinist technology), the **MASTER** Consortium Partners have agreed to present our definition of a laser machinist as follows:

LASER MACHINIST - apply the principles of electronics, lasers, optics, materials, engineering documentation, CAD/CAM, and systems integration to manufacture products following current industry and company standards.

This volume contains the justification, documentation, and course syllabi for the courses which we recommend as minimum training for individuals desiring to become laser machinists.

The first and most important task of the **MASTER** program was the development of a foundation upon which all other works could be built. The **MASTER** Competency Profile is this foundation.

The MASTER Competency Profile

Development of Competency Profiles at each of the **MASTER** sites began with visits to representative companies for the purpose of surveying expert workers within the industry and occupational areas under investigation. Each site began the survey process by asking a subject matter expert in the targeted technical area, generally a member of its faculty, to employ a modified version of the generally accepted DACUM (Developing A Curriculum) method to categorize the major skills needed to work in the selected occupation. As source materials, the college instructors drew on their professional knowledge and experience of current industry requirements and trends. The initial skill standards developed by the subject matter experts underwent numerous internal reviews and revisions within each site, assuming final form as a series of structured survey and interview questions designed to elicit a simple yes or no response.

To determine an appropriate survey sample, each site compiled a database of its region's small and medium-sized manufacturers and searched for companies likely to employ workers in the targeted occupational area. The resulting cross-industry samples were sorted further to achieve a balance of technological capability and workforce size; the sample companies within each region were then asked to participate in the project. Willing respondents were scheduled for interviews.

During the company interviews, the **MASTER** staff asked expert workers to identify the primary duties and tasks performed by a typical worker and to consider the special skills and knowledge, traits and attitudes, and industry trends that would have an impact on worker training, employability, and performance both now and in the future. The interview results were analyzed to create individual profiles identifying the most common duties and skills required of workers at each company. These individual company Competency Profiles served two purposes. First, they showed, in a format that could be easily understood by both industries and educators, a picture of the occupational specialty at a given company at that particular time. Second, these individual company Competency Profiles furnished the company with a document over which they could claim ownership. This, in effect, made them real partners in the work of **MASTER**.

Data for all companies were then aggregated to develop a composite Competency Profile of industry skill standards within the selected occupational specialty area of Laser Machinist, as shown on the following page.

These same duties and tasks were then included in both the Texas and National Surveys for further validation. As a result of the surveys, additional refinements were made in the Competency Profiles. These changes were incorporated into the individual course syllabi which were used for the pilot program.

The **MASTER** Competency Profile for Laser Machinist has been included on the following page.

Laser Machining
Competency Profile

Job Analysis conducted and prepared by

MASTER

***M*achine Tool *A*dvanced *S*kills**
***T*echnology *E*ducational**
***R*esources Program**
Consortium

LASER MACHINIST

Technical Workplace Competencies

Duties	Tasks			
A Practice Laser Safety	A-1 Discuss laser safety standards	A-2 Discuss basic laser principles	A-3 Discuss laser hazards	A-4 Discuss control measures
B Apply Mathematical Concepts	B-1 Perform basic mathematical functions	B-2 Perform algebraic functions	B-3 Study exponents and right triangle geometry	B-4 Study elements of plane and solid geometry
	B-5 Perform data evaluation and statistical analysis	B-6 Perform proportioning and interpolation	B-7 Perform basic trigonometric calculations	B-8 Investigate vectors and vector systems
	B-9 Investigate the Cartesian Coordiante System			
C Perform Measurement and Inspection	C-1 Study basics of metrology	C-2 Select instruments used for measurement	C-3 Study datums and the three plane concept	C-4 Select gauging tools
	C-5 Use CMM for location of features	C-6 Perform measurements for orientation tolerances	C-7 Perform measurment by optical comparison	C-8 Perform measurements for circularity, concentricity, runout, and straightness tolerances
	C-9 Investigate advanced metrology topics			
D Troubleshoot Industrial Electronics and Control	D-1 Perform DC voltage, current, and power measurements	D-2 Perform AC voltage, current, and power measurements	D-3 Investigate digital logic systems	D-4 Investigate diode applications
	D-5 Investigate transistors and thyristors	D-6 Investigate operational amplifiers	D-7 Investigate power supply circuits	

LASER MACHINIST

Technical Workplace Competencies

Duties	Tasks			
E Apply Concepts of Modern Optics	E-1 Study reflection and refraction at plane surfaces	E-2 Perform imaging with a single lens	E-3 Perform imaging with multiple lenses	E-4 Study F-stops and apertures
	E-5 Use laser beam-expanding collimators	E-6 Study interference	E-7 Study diffraction	E-8 Study polarization
	E-9 Investigate radiometry and photometry			
F Perform CNC Machining	F-1 Apply machine specific nomenclature and terminology	F-2 Investigate the Cartesian coordinate system as applied to a CNC mill or laser	F-3 Apply CNC programming language	F-4 Perform start up, tool changing, and ending of programs
	F-5 Perform positioning and basic drilling	F-6 Create a sub-program	F-7 Perform contouring	F-8 Apply tool radius compensation
	F-9 Perform program preparation	F-10 Apply special laser coding parameters		
G Investigate Industrial Laser Systems	G-1 Review characteristics of light	G-2 Investigate emission and absorption of light	G-3 Discuss optical cavities and laser modes	G-4 Discuss temporal characteristics of lasers
	G-5 Investigate spatial characteristics of lasers	G-6 Discuss laser classifications and characteristics		
H Perform Computer-Aided Drafting (CAD)	H-1 Discuss and understand PC basics	H-2 Discuss CAD basics and file management	H-3 Use drawing settings	H-4 Perform basic editing commands

LASER MACHINIST

Technical Workplace Competencies

Duties	Tasks			
H Perform Computer-Aided Drafting (CAD) (continued)	H-5 Create drawings with accuracy	H-6 Organize drawing information	H-7 Control the display of drawings	H-8 Use intermediate drawing commands
	H-9 Perform intermediate editing commands	H-10 Create multi view drawings	H-11 Create sectioned drawings	H-12 Investigate basic dimensioning
	H-13 Perform advanced dimensioning	H-14 Use and manipulate blocks	H-15 Use blocks to automate the drawing process	
I Perform Laser Materials Processing	I-1 Review laser safety standards	I-2 Discuss lasers used for materials processing	I-3 Discuss laser optics and beam characteristics	I-4 Investigate absorption of laser energy
	I-5 Use lasers for welding and surface treatment	I-6 Use lasers for material removal		
J Perform Computer-Aided Manufacturing (CAM)	J-1 Discuss and understand the basics of a PC based CAM system	J-2 Discuss basic CAM operations	J-3 Set up cutting tools	J-4 Create simple part profiles
	J-5 Create and edit complex part profiles	J-6 Perform roughing, drilling, and counterboring	J-7 Advanced editing of part profiles	J-8 Edit tool paths
	J-9 Use construction layers in SmartCAM	J-10 Perform user commands and machine events	J-11 Create families of parts	J-12 Perform CAD/ CAM integration
	J-13 Perform code generation			

Laser Machinist
Skills, Traits, and Trends

Skills and Knowledge
Communication Skills
Use Measurement Tools
Use Inspection Devices
Mathematical Skills
Reading/Writing Skills
Knowledge of Safety Regulations
Practice Safety in the Workplace
Organizational Skills
Knowledge of Company Policies/ Procedures
Mechanical Aptitude
Ability to Comprehend Written/Verbal Instructions
Basic Knowledge of Fasteners
Ability to Work as Part of a Team
Conversance with the Technical Language of the Trade
Knowledge of Occupational Opportunities
Knowledge of Employee/Employer Responsibilities
Knowledge of Company Quality Assurance Activities
Practice Quality-Consciousness in Performance of the Job
Basic Machining Course Prerequisites or CNC Machinist Course Ware

Traits and Attitudes
Strong Work Ethic
Interpersonal Skills
Punctuality
Dependability
Honesty
Neatness
Safety Consciousness
Motivation
Responsibility
Physical Ability
Professionalism
Trustworthiness
Customer Relations
Personal Ethics

Tool/Equipment Proficiency
AC/DC Multimeter
Oscilloscope
DC Power Supply (+/- 15 volt)
3-Axis CNC Milling Machine
Introductory Optics Kit
HeNe Laser (Low power)
Pentium Computer System
AutoCAD® or Equivalent Software
SmartCAM® or Equivalent Software
60 Watt Nd:Yag Laser Marking/Etching System
200 Watt CO^2 Laser System with X-Y Table
Coordinate Measuring Machine
Optical Comparator
Vqarious Hand-Held Measurement Tools
Optical Power Meter with Attenuator

Current Trends
High Power Semiconductor Lasers
Desktop Manufacturing
Rapid Prototyping
Automation
Fiber Optic Beam Delivery
ISO 900X Certification

The MASTER Pilot Program
Curriculum and Course Descriptions

After completing the Competency Profile for each occupational specialty area, each MASTER partner reviewed its existing curriculum against the industry-verified skill standards in order to identify a suitable foundation for new pilot training programs. Because each college had to comply with the requirements of its respective college system and appropriate state agency, the resulting pilot curricula for occupational specialty areas tended to vary in format and academic requirements (e.g., some programs were based on the semester system, others on the quarter system). Despite differences in the curricula developed at the partner colleges, each of the pilot programs was designed to achieve the following two goals mandated in the MASTER grant proposal:

> ***Pilot Program***: "Conduct a one year pilot program with 25 or more selected applicants at each college or advanced technology center to evaluate laboratory content and effectiveness, as measured by demonstrated competencies and indicators of each program area."
>
> ***Student Assessment***: "Identify global skills competencies of program applicants both at point of entrance and point of exit for entry-level and already-employed technicians."
>
> (*Note*: Not all occupational specialty areas were pilot-tested at all Development Centers; however, all partner colleges conducted one or more pilot programs.)

Included on the following page is the curriculum listing for the pilot program which was used to validate course syllabi for this occupational specialty area. The curriculum also shows the number of hours assigned to each of the courses (lecture, laboratory and credit hours). Also included is a description of each of the courses.

MASTER Curriculum
Laser Machining
(Certificate Program)

		LEC	LAB	CR
First Semester*				
LSR 584	Industrial Mathematics	3	0	3
LSR 585	Industrial Electronics & Controls	2	3	3
LSR 591	Computer-Aided Design (CAD)	2	3	3
LSR 589	Computer Numerical Control (CNC)	2	3	3
LSR 594	Modern Optics	2	3	3
		11	12	15
Second Semester*				
LSR 593	Laser Safety	1	0	1
LSR 587	Industrial Laser Systems	3	3	4
LSR 592	Computer-Aided Manufacturing (CAM)	2	3	3
LSR 586	Metrology	2	3	3
LSR 588	Laser Materials Processing	2	3	3
		10	12	14
	Program Totals	21	24	29

*** Each Semester is 15 weeks in length**

MASTER Course Descriptions
Laser Machining

First Semester

LSR 584 **Industrial Mathematics** (3-0-3) is a broad mathematics course that includes topics related to the machine tool industry. Areas of study include elements of Algebra I, Algebra II, plane and solid geometry, trigonometry, and statistics. Problems are related to industry. Calculator use is required throughout.

LSR 585 **Fundamentals of Industrial Electronics and Controls** (2-3-3) is for students in the Laser Machining Technology program. It consists of a review of basic electronics theory and then a comprehensive coverage of the control of industrial machinery and processes through the use of electronic circuits and systems. Some of the topics covered include: linear integrated circuits, DC and AC motors, industrial control devices, transducers, industrial process control and programmable controllers. After a review of DC and AC circuit theory, the fundamentals of active devices and digital logic theory are also covered.

LSR 591 **Computer Aided Design (CAD)** (2-3-3) introduces the student to the terminology, capabilities, and operation of computer-aided drafting hardware and software. The student will be given graphic laboratory problems to create work files and to develop libraries and elementary drawings utilizing lines, rectangles, circles, arcs and ellipses. Using AutoCAD™ as a typical computer-aided drafting and design program, students will also learn scaling, rotations, translations, and projections.

LSR 589 **Computer Numerical Control (CNC)** (2-3-3) introduces the fundamental concepts of Computer Numerical Control (CNC). The importance of numerical control to manufacturing and productivity is discussed with different types of CNC systems. Coverage includes writing programs to perform three-axis hole and a variety of milling operations using the milling machines available in the labs. Students will also create programs for the various lathes. Turning and facing routines for the lathes as well as the math required to perform all the operations are covered.

LSR 594 **Modern Optics** (2-3-3) introduces the student to the basic theories of geometric and wave optics. Topics covered include the rectilinear propagation of light, elementary image formation, lenses, prisms, ray tracing, basic wave theory, interference, diffraction, polarization, and the analysis of optical systems. Classroom lectures supplemented with experimental demonstrations.

Second Semester

LSR 593 **Laser Safety** (1-0-1) is for students in the Laser Machining Technology program. The basic theory of laser operation is presented. With the emphasis on industrial lasers (i.e., higher-power models), various types of lasers and their different uses and applications are covered. Also, the various types of hazards encountered in the use of lasers and the present government safety regulations are discussed.

LSR 587 **Industrial Laser Systems** (3-3-4) Provide the student with a basic understanding of industrial lasers, applications, and systems. Course material includes the study of spontaneous and stimulated emission, laser output characteristics and modification, materials, laser safety, laser components, survey of laser types, and industrial laser applications. Among the laser systems to be studied are gas lasers, semiconductor lasers, solid state lasers, ion lasers, molecular and dye lasers, excimer lasers, free electron lasers, and others. Among the many different uses of lasers studied are laser welding and surface treatment, material removal, laser marking and etching, non-destructive testing, distance measurement, lasers in medicine and surgery, lasers in construction, spectroscopy, communications and others. Classroom lectures are supplemented with experimental and video demonstrations. Lab included.

LSR 592 **Computer Aided Manufacturing** (2-3-3) explores in a laboratory setting, machining by utilizing a graphical software package (SmartCAM®) to generate part programs for a CNC mill and laser. Following a review of manual part programming, the emphasis of the course is learning to use the CAM software to select tools, enter part geometry, and convert screen graphics into a CNC program. The student then learns how to communicate the program to the machine and manufacture the part. Intensive work is included in editing the graphics to fully utilize the software. In addition, the student will learn the integration of Computer Aided Design (CAD) with CAM to enhance the understanding of proceeding from the design process through the manufacturing process.

LSR 586 **Metrology** (2-3-3) Provides the class with an understanding of the importance of accurate measurement as it relates to the overall world of manufacturing. Within the fifteen week semester, we discuss the history and language of measurement; various measurement instruments and gages are also discussed. Also covered will be calibration, optical comparators and coordinate measuring machines (CMM). The principles of Geometric Dimensioning and Tolerancing are discussed throughout the semester to teach the interpretation of engineering drawings per ANSI Y14.5-1994.

LSR 588 **Laser Materials Processing** (2-3-3) first provides a basis for comparison between traditional methods and non-traditional methods of machining. By next studying the fundamentals of laser heating, the student is led into the world of laser material (metals, plastics, ceramics, and composites) interactions, with all of the variables which affect this process. This provides a basis for lasers studied as machine tools and the attendant machine operations, including safety. Demonstration laboratories provided after each new concept discussed in class. Video demonstrations shown for more elaborate scenarios.

The MASTER
Technical Workplace Competencies
and
Course Crosswalk

After development of appropriate curricula for the pilot programs, each **MASTER** college began to develop individual course outlines for its assigned specialty area. The skill standards identified in the Competency Profile were cross walked against the technical competencies of the courses in the pilot curriculum. The resulting matrix provided a valuable tool for assessing whether current course content was sufficient or needed to be modified to ensure mastery of entry-level technical competencies. Exit proficiency levels for each of the technical competencies were further validated through industry wide surveys both in Texas and across the nation.

The Technical Workplace Competencies and Course Crosswalk on the following pages presents the match between industry—identified duties and tasks and the pilot curriculum for Laser Machining. Course titles are shown in columns; duties and tasks, in rows. The Exit Proficiency Level Scale (see Figure 1), an ascending scale with 5 as the highest level of proficiency, includes marked boxes indicating whether the task is covered by the instructor during the course; the numbers 1–5 indicate the degree of attention given to the task and the corresponding proficiency expected on the part of the student upon completion of the course of studies. The crosswalk is intended to serve as an aide to other instructional designers and faculty in community college programs across the nation.

EXIT PROFICIENCY LEVEL SCALE					
Technical Workplace Competency	**1**	**2**	**3**	**4**	**5**
	Rarely	Routinely with Supervision	Routinely with Limited Supervision	Routinely Without Supervision	Initiates/ Improves/ Modifies and Supervises Others

Figure 1

Included on the following pages is the Technical Workplace Competencies and Course Crosswalk for the pilot program curriculum. This crosswalk validates the fact that the duties and tasks which were identified by industry as being necessary for entry-level employees have been incorporated into the development of the course syllabi.

LASER MACHINING

Technical Workplace Competencies and Course Crosswalk

	Industrial Mathematics	Fund. Indus. Elec./Controls	Computer Numerical Control	Modern Optics	Industrial Laser Systems	Computer-Aided Drafting	Computer-Aided Mfg. (CAM)	Laser Materials Processing	Metrology	Laser Safety					EXIT PROFICIENCY LEVEL
A. PRACTICE LASER SAFETY															
A-1 Discuss Laser Safety Standards				R	R			M		I					4
A-2 Discuss Basic Laser Principles				R	R			M		I					4
A-3 Discuss Laser Hazards				R	R			M		I					4
A-4 Discuss Control Measures				R	R			M		I					4
B. APPLY MATHEMATICAL CONCEPTS															
B-1 Perform Basic Mathematical Functions	I	R	R	R	R	R	R	R	R	R					4
B-2 Perform Algebraic Functions	I	R	R	R	R	R	R	R	R	R					4
B-3 Study Exponents and Right Triangle Geometry	I	R	R	R	R	R	R	R	R	R					4
B-4 Study Elements of Plane and Solid Geometry	I		R		R	M	R		R						4
B-5 Perform Data Evaluation and Statistical Analysis	I	R		R	R			R	R	R					3
B-6 Perform Proportioning and Interpolation	I	R	R	R	R	R	R	R	R	R					3
B-7 Perform Basic Trigonometric Calculations	I	R	M	R	R	R	R	R	R	R					4
B-8 Investigate Vectors and Vector Systems	I	R		R				R							1
B-9 Investigate the Cartesian Coordinate System	I	R	R	R	R	M	M	R	R						4
C. PERFORM MEASUREMENT AND INSPECTION															
C-1 Study Basics of Metrology									I						4
C-2 Select Instruments Used for Measurement									I						4
C-3 Study Datums and the Three Plane Concept	I					R			M						3
C-4 Select Gauging Tools									I						2
C-5 Use CMM for Location of Features			I						R						3
C-6 Perform Measurements for Orientation Tolerances									I						2
C-7 Perform Measurement by Optical Comparison								I	R						3
C-8 Perform Measurements for Circularity, Concentricity, Runout, and Straightness Tolerances								I	R						2
C-9 Investigate Advanced Metrology Topics					I				R						2
D. TROUBLESHOOT INDUSTRIAL ELECTRONICS AND CONTROL															
D-1 Perform DC Voltage, Current, and Power Measurements		I			R			R		R					4

I=Introduced and Taught R=Repeated and Reinforced M=Mastered

BEST COPY AVAILABLE

LASER MACHINING

Technical Workplace Competencies and Course Crosswalk

	Industrial Mathematics	Fund.-Indus. Elec./Controls	Computer Numerical Control	Modern Optics	Industrial Laser Systems	Computer-Aided Drafting	Computer-Aided Mfg. (CAM)	Laser Materials Processing	Metrology	Laser Safety					EXIT PROFICIENCY LEVEL
D-2 Perform AC Voltage, Current, and Power Measurements		I			R			R		R					4
D-3 Investigate Digital Logic Systems		I			R					R					4
D-4 Investigate Diode Applications		I			R					R					4
D-5 Investigate Transistors and Thyristors		I			R					R					4
D-6 Investigate Operational Amplifiers		I		R	R										4
D-7 Investigate Power Supply Circuits		I		R	R			R		R					4
E. APPLY CONCEPTS OF MODERN OPTICS															
E-1 Study Reflection and Refraction at Plane Surfaces				I	R			M		R					4
E-2 Perform Imaging with a Single Lens				I	R			M		R					4
E-3 Perform Imaging with Multiple Lenses				I	R			R		R					4
E-4 Study F-Stops and Apertures				I	R			R		R					4
E-5 Use Laser Beam-Expanding Collimators				I	R			M		R					4
E-6 Study Interference				I	R			R							4
E-7 Study Diffraction				I	R			R							4
E-8 Study Polarization				I	R			M		R					4
E-9 Investigate Radiometry and Photometry				I	R			M		R					5
F. PERFORM CNC MACHINING															
F-1 Apply Machine Specific Nomenclature and Terminology			I		R		R	R							4
F-2 Investigate the Cartesian Coordinate System as Applied to a CNC Mill or Laser	I		R		R		R	R							4
F-3 Apply CNC Programming Language			I				R	R							5
F-4 Perform Start Up, Tool Changing, and Ending of Programs			I				R	M							5
F-5 Perform Positioning and Basic Drilling			I				R	R							3
F-6 Create a Sub-Program			I					R							2
F-7 Perform Contouring			I				R	M							5
F-8 Apply Tool Radius Compensation			I				R	R							4
F-9 Perform Program Preparation			I				R	M							5
F-10 Apply Special Laser Coding Parameters			I				R	M							4

I=Introduced and Taught R=Repeated and Reinforced M=Mastered

BEST COPY AVAILABLE

LASER MACHINING

Technical Workplace Competencies and Course Crosswalk

	Industrial Mathematics	Fund.-Indus. Elec./Controls	Computer Numerical Control	Modern Optics	Industrial Laser Systems	Computer-Aided Drafting	Computer-Aided Mfg. (CAM)	Laser Materials Processing	Metrology	Laser Safety					EXIT PROFICIENCY LEVEL
G. INVESTIGATE INDUSTRIAL LASER SYSTEMS															
G-1 Review Characteristics of Light				I	R			R		R					4
G-2 Investigate Emission and Absorption of Light				I	M			R		R					4
G-3 Discuss Optical Cavities and Laser Modes					I			R		R					4
G-4 Discuss Temporal Characteristics of Lasers				I	R			M		R					5
G-5 Investigate Spatial Characteristics of Lasers				I	R			M		R					5
G-6 Discuss Laser Classifications and Characteristics					I			R		M					5
H. PERFORM COMPUTER-AIDED DRAFTING (CAD)															
H-1 Discuss and Understand PC Basics						I	R	M							4
H-2 Discuss CAD Basics and File Management						I	R	R							4
H-3 Use Drawing Settings						I	R	R							4
H-4 Perform Basic Editing Commands						I	R	M							5
H-5 Create Drawings with Accuracy						I	R	R							4
H-6 Organize Drawing Information						I	R	R							4
H-7 Control the Display of Drawings						I	R	R							4
H-8 Use Intermediate Drawing Commands						I	R	R							4
H-9 Perform Intermediate Editing Commands						I	R	R							4
H-10 Create Multi View Drawings						I		R	R						4
H-11 Create Sectioned Drawings						I			R						4
H-12 Investigate Basic Dimensioning						I		R	R						4
H-13 Perform Advanced Dimensioning						I			R						3
H-14 Use and Manipulate Blocks						I									2
H-15 Use Blocks to Automate the Drawing Process						I									2
I. PERFORM LASER MATERIALS PROCESSING															
I-1 Review Laser Safety Standards				R	R			M		I					5
I-2 Discuss Lasers Used for Materials Processing			R		I			M		R					4
I-3 Discuss Laser Optics and Beam Characteristics				I	R			M		R					4
I-4 Investigate Absorption of Laser Energy								R		I					4

I=Introduced and Taught R=Repeated and Reinforced M=Mastered

BEST COPY AVAILABLE

LASER MACHINING

Technical Workplace Competencies and Course Crosswalk

	Industrial Mathematics	Fund. Indus. Elec./Controls	Computer Numerical Control	Modern Optics	Industrial Laser Systems	Computer-Aided Drafting	Computer-Aided Mfg. (CAM)	Laser Materials Processing	Metrology	Laser Safety					EXIT PROFICIENCY LEVEL
I-5 Use Lasers for Welding and Surface Treatment							I								5
I-6 Use Lasers for Material Removal			I			R	R		R						5
J. PERFORM COMPUTER-AIDED MANUFACTURING (CAM)															
J-1 Discuss and Understand the Basics of a PC Based CAM System						I	R								4
J-2 Discuss Basic CAM Operations						I	R								4
J-3 Set Up Cutting Tools			I			R	R								4
J-4 Create Simple Part Profiles					I	M	R								5
J-5 Create and Edit Complex Part Profiles					I	R	R								4
J-6 Perform Roughing, Drilling, and Counterboring			I			R	R								4
J-7 Advanced Editing of Part Profiles					I	R	R								4
J-8 Edit Tool Paths			I			R	M								5
J-9 Use Construction Layers in SmartCAM					I	R									2
J-10 Perform User Commands and Machine Events			I			R									1
J-11 Create Families of Parts						I									1
J-12 Perform CAD/CAM Integration					I	R	M	R							5
J-13 Perform Code Generation			I			R	R								4

BEST COPY AVAILABLE

SCANS

The Secretary's Commission on Achieving Necessary Skills (SCANS), U. S. Department of Labor, has identified in its "AMERICA 2000 REPORT" the following five competencies and a three-part foundation of skills and personal qualities that are needed for solid job performance:

COMPETENCIES:

Resources:	*Identifies, organizes, plans, and allocates resources*
Interpersonal:	*Works with others*
Information:	*Acquires and uses information*
Systems:	*Understands complex inter-relationships*
Technology:	*Works with a variety of technologies*

FOUNDATION SKILLS:

Basic Skills:	*Reads, writes, performs arithmetic and mathematical operations, listens, and speaks well*
Thinking Skills:	*Thinks creatively, makes decisions, solves problems, visualizes, knows how to learn, and reasons*
Personal Qualities:	*Displays responsibility, self-esteem, sociability, self-management, integrity, and honesty*

Recognizing the value of SCANS proficiencies to job performance as well as the growing mandate in many states to include SCANS activities in course curricula, **MASTER** asked survey respondents to review the SCANS skill sets in the context of the draft skill standards for each occupational specialty area. **MASTER** also incorporated an evaluation of SCANS competencies and foundation skills into its assessment of the pilot training curricula. The results were summarized in a crosswalk that allowed the **MASTER** staff to modify course contents where needed to strengthen the achievement of SCANS competencies.

As soft skills, the SCANS competencies are inherently difficult to quantify. **MASTER** realizes that some faculty will emphasize the SCANS more or less than others. In time, faculty will learn to make these types of SCANS activities an integral and important part of the teaching process.

MASTER Curriculum
Laser Machining
(Certificate Program)

		LEC	LAB	CR
First Semester*				
LSR 584	Industrial Mathematics	3	0	3
LSR 585	Industrial Electronics & Controls	2	3	3
LSR 591	Computer-Aided Design (CAD)	2	3	3
LSR 589	Computer Numerical Control (CNC)	2	3	3
LSR 594	Modern Optics	2	3	3
		11	12	15
Second Semester*				
LSR 593	Laser Safety	1	0	1
LSR 587	Industrial Laser Systems	3	3	4
LSR 592	Computer-Aided Manufacturing (CAM)	2	3	3
LSR 586	Metrology	2	3	3
LSR 588	Laser Materials Processing	2	3	3
		10	12	14
	Program Totals	21	24	29

*** Each Semester is 15 weeks in length**

LSR 584

MASTER PROGRAM

Industrial Mathematics

COURSE SYLLABUS

Total lecture hours: 45 **Total lab hours: 0** **Credit hours: 3**

COURSE DESCRIPTION:

Industrial Mathematics is a broad mathematics course that includes topics related to the machine tool industry. Areas of study include elements of Algebra I, Algebra II, plane and solid geometry, trigonometry, and statistics. Problems are related to industry wherever possible. Calculator use is required throughout.

PREREQUISITES: **Satisfactory performance on math placement test**

COURSE OBJECTIVES:

After successful completion of this course, the students will be able to:

1. Understand scientific notation and conversion of units;
2. Use a hand calculator for trigonometric, statistical, and exponential functions;
3. Understand various equations relating to plane and solid geometry, and use algebraic techniques to solve for the unknown variable;
4. Perform basic statistical analysis including the plotting and analysis of bar graphs and charts;
5. Understand linear equations, proportioning, and interpolation; and,
6. Use trigonometry in right and oblique triangles, and vector analysis.

REQUIRED COURSE MATERIALS:

Textbook: *Basic Technical Mathematics,* C. T. Olivo and T. P. Olivo, Delmar Publishers, Inc., Latest Edition

Lab Manual: None

Supplementary Materials: Handouts, worksheets, and class problems

Supplies: Scientific calculator

METHOD OF INSTRUCTION:

Lecture: Didactic presentations will include lecture, handouts, worksheets, and class problems.

Method of Evaluation: A student's grade will be based on multiple measures of performance. The assessment will measure development of independent critical thinking skills and will include evaluation of the student's ability to:

1. Perform the manipulative skills of the craft as required to satisfactorily complete laboratory assignments;
2. Apply theory to laboratory assignments;
3. Perform on written, oral, or practical examinations;
4. Perform on outside assignments including writing assignments;
5. Contribute to class discussions;
6. Maintain attendance per current policy; and,
7. Follow all shop rules and safety regulations as stated in the laboratory manual.

LECTURE OUTLINE:

Lecture Topics

Introduction, Class Procedures

BASIC MATH REVIEW

Fractions, Decimals, Percentages
Units of Length, Area, Volume
Conversion of Units to S.I.
Use of Calculator

ALGEBRA REVIEW

Solving Equations with One Unknown
Isolation of One Unknown
Cross Multiplication
Equations with Fractions
Linear Equations, Slope of a Line

EXPONENTS & RIGHT TRIANGLE GEOMETRY

Law of Exponents
Exponentials and Roots
Right Triangle and Pythagorean Theorem

ELEMENTS OF PLANE AND SOLID GEOMETRY

Circle - Area, Circumference, Angular Measurement
(Degree and Radian)
Establish Tangent to Circle
Parallel Lines, Transverse Lines and Angles
Bisecting Angles

Sum of Interior Angles of Polygon
Areas of Triangles, Trapezoid
Areas of Irregular Shapes
Hourly Exam 1
Volume of Regular and Irregular Solids
Specific Gravity of Materials
Weight (English, S.I.)
Review Exam

DATA EVALUATION AND STATISTICAL ANALYSIS

Plotting Data, Bar Graphs, Pie Charts
Mean, Normal Distribution, Standard Dev.

PROPORTIONING AND INTERPOLATION

Ratios and Proportions
Direct, Inverse, Combined Variation
Constants of Proportionality
Tabular Interpolation

INTRODUCTION TO TRIGONOMETRY

Trigonometric Functions
Inverse Functions
Solving Right Triangles

TRIGONOMETRY

Trigonometric functions (values) of angles > 90
Solving Right Triangles
Exam 2
Review Exam
Applications of Trigonometry

OBLIQUE TRIANGLE GEOMETRY, VECTORS

Law of Sines, Law of Cosines
Introduction to Vectors
Adding Vectors
Components of Vectors

VECTOR SYSTEMS AND ANALYSIS

Combining Vectors

CARTESIAN COORDINATE SYSTEM

Coordinates, 2 and 3 Dimensions
Linear Equation, Slope of Line in
Coordinate System
Exam 3 and Review

COMPREHENSIVE FINAL EXAM

Total Lecture Hours 45

COURSE OBJECTIVES: SCANS COMPETENCIES

The Secretary's Commission on Achieving Necessary Skills (SCANS), U.S. Department of Labor, has identified in its "AMERICA 2000 REPORT" that all students should develop a new set of competencies and foundation skills if they are to enjoy a productive, full and satisfying life. These are in addition to the Technical Workplace Competencies required by industry. SCANS is made up of five competencies and a three-part foundation of skills and personal qualities that are needed for solid job performance. All italicized headings in this section are direct quotations from "What Work Requires of Schools: A SCANS Report for America 2000."

The following activities will be performed by each student for successful completion of this course:

I. COMPETENCIES

- *A.* ***Resources:*** *Identifies, organizes, plans, and allocates resources*
  1. Allocates time to complete assigned tasks on schedule
  2. Determines and allocates required materials and resources for meeting objectives
  3. Evaluates skills, performance, and quality of work and provides feedback
- *B.* ***Interpersonal:*** *Works with others*
  1. Participates as a member of the team, contributing to group effort
  2. Provides individual assistance/direction to peers as requested
  3. Determines and meets expectations
  4. Exercises leadership qualities to effectively communicate ideas and make decisions.
  5. Negotiates resources in order to accomplish objectives
  6. Works well with all members of the class
- *C.* ***Information:*** *Acquires and uses information*
  1. Acquires and evaluates information
  2. Organizes and maintains information
  3. Interprets and communicates information
- *D.* ***Systems:*** *Understands complex inter-relationships*
  1. Understands and works well with social, organizational, and technological systems
  2. Monitors and corrects performance of system during operation
  3. Recommends modifications to system to improve performance
- *E.* ***Technology:*** *Works with a variety of technologies*
  1. Chooses relevant procedures, tools, and equipment
  2. Applies appropriate procedures and techniques to accomplish tasks

3. Identifies or solves problems to maintain equipment

II. FOUNDATION SKILLS

A. **Basic Skills:** Reads, writes, performs arithmetic and mathematical operations, listens and speaks

1. ***Reading:*** *Locates, understands, and interprets written information in prose and in documents such as manuals, graphs, and schedules*
   a. Demonstrates basic reading skills including abilities to perceive main ideas, draw appropriate conclusions, detect a sequence, locate answers, find facts, and infer from written texts
   b. Demonstrates course specific reading skills including abilities to read, interpret, and comprehend information from text and supplemental materials on a level to facilitate productive independent and group study
   c. Demonstrates ability to read, interpret, and utilize information from course specific instruments (i.e., charts, diagrams, graphs, schematics, blueprints, flow charts, etc.)
   d. Demonstrates ability to read, interpret, and follow schedules and procedural instructions in a timely and appropriate manner
   e. Demonstrates ability to choose and use most appropriate reading method (skim, scan, or read for comprehension) for materials
2. ***Writing:*** *Communicates thoughts, ideas, information, and messages in writing; and creates documents such as letters, directions, manuals, reports, graphs, and flow charts*
   a. Demonstrates basic writing skills including abilities to produce written documents which conform with accepted grammatical and communication standards required for effective daily functioning
   b. Demonstrates effective written study skills including note taking, maintaining course specific journals, workbooks, manuals, etc.
   c. Demonstrates technical writing skills in preparing outlines, summaries, time lines, flow charts, diagrams, etc. appropriate to materials covered
   d. Demonstrates ability to complete all required writings in a timely, complete, and professional manner
   e. Demonstrates competence in subject matter through the organization and presentation of answers to required written assessments

3. ***Arithmetic/Mathematics:*** *Perform basic computations and approaches practical problems by choosing appropriately from a variety of mathematical techniques*
   a. Demonstrates proficiency in basic arithmetic functions including ability to add, subtract, multiply, and divide whole numbers, fractions, decimals, and percentages
   b. Demonstrates ability to read, comprehend, and select appropriate math procedures to work basic math problems
   c. Demonstrates ability to understand and perform multi-step computations
   d. Demonstrates ability to read, interpret, and use standard measuring devices
   e. Demonstrates ability to comprehend, retain, and utilize course specific measuring devices effectively
   f. Demonstrates ability to understand, retain, and utilize higher mathematical formulas and functions required for course specific math performance
   g. Demonstrates ability to appropriately transfer mathematical calculations and information from paper to machines
4. ***Listening:*** *Receives, attends to, interprets, and responds to verbal messages and other cues*
   a. Functions at minimal or above required hearing levels to receive, attend, interpret, and respond to verbal messages and instructions and to safely operate machinery
   b. Demonstrates ability to hear, comprehend, and appropriately follow directions
   c. Demonstrates auditory ability to hear, comprehend, and utilize verbal classroom as well as other auditory instruction
   d. Demonstrates ability to discriminate between essential and non-essential verbal information and react appropriately
   e. Demonstrates ability to focus and fine-tune listening skills to receive, interpret, and respond to various sounds
   f. Demonstrates ability and maturity to seek and receive additional individualized instruction as needed
5. ***Speaking:*** *Organizes ideas and communicates orally*
   a. Demonstrates appropriate listening and speaking skills in personal conversations
   b. Demonstrates ability to choose and organize appropriate words to effectively communicate

c. Demonstrates ability to speak clearly and distinctly with appropriate volume, tone, and body language for situation
d. Demonstrates ability to spontaneously organize and present appropriate answers and/or short presentations for classroom and /or assessment purposes
e. Demonstrates ability to formulate, organize, and deliver major presentations to peers or groups
f. Demonstrates ability to speak effectively in one-on-one, small group, or large group presentations
g. Demonstrates ability to take responsibility for presentations

B. Thinking Skills: Thinks creatively, makes decisions, solves problems, visualizes, knows how to learn and reasons

1. ***Decision Making:*** *Specifies goals and constraints, generates alternatives, considers risks, and evaluates and chooses best alternative*

a. Demonstrates ability to objectively assess personal strengths and weaknesses
b. Demonstrates ability to set realistic short-term and long-term goals
c. Demonstrates ability to recognize and distinguish between positive and negative alternatives
d. Demonstrates ability to identify potential pitfalls and take evasive actions
e. Demonstrates ability to objectively and responsibly evaluate alternatives by testing hypotheses and selecting most appropriate response
f. Demonstrates ability to profit from negative evaluations or mistakes by reformulating, redirecting, reconstructing, or retesting alternatives
g. Demonstrates maturity in taking responsibility for decisions

2. ***Problem Solving:*** *Recognizes problems and devises and implements plan of action*

a. Demonstrates ability to detect problem through observation, inquiry, or directive
b. Demonstrates ability to grasp appropriate overview and degree of seriousness of problem and to behave responsibly in situation
c. Demonstrates ability to generate alternatives or options for problem solution
d. Demonstrates ability to research options, assess and evaluate options, and determine appropriate and best solution

e. Demonstrates ability to initiate and effect solution
f. Demonstrates ability to take responsibility for outcomes
g. Demonstrates ability to effectively problem solve in individual, team, or group situations

3. ***Seeing Things In the Mind's Eye:*** *Organizes, and processes symbols, pictures, graphs, objects, and other information*
   a. Functions at minimum or above required visual levels in order to see, interpret, attend and respond to visual imagery and meet safety requirements for necessary machinery
   b. Demonstrates ability to read, interpret, and act upon signs, symbols, and other visual cues
   c. Demonstrates ability to visually discriminate in gross and fine imagery
   d. Demonstrates ability to visualize abstractly
   e. Demonstrates ability to apply visual imagery to applied tasks

4. ***Knowing How to Learn:*** *Use efficient learning techniques to acquire and apply new knowledge and skills*
   a. Demonstrates mastery of basic reading, math, and language skills through application
   b. Demonstrates ability to translate abstract theory into practical application
   c. Demonstrates ability to incorporate and generalize new learning into a sequential learning process
   d. Demonstrates knowledge of good study skills and learning habits

5. ***Reasoning:*** *Discovers a rule or principle underlying the relationship between two or more objects and applies it when solving a problem*
   a. Demonstrates use of simple logic
   b. Demonstrates ability to distinguish relationships
   c. Demonstrates ability to determine and isolate factors in relationships
   d. Demonstrates and applies knowledge through practice
   e. Recognizes that attitudes, skills, and practice are essential to productivity
   f. Demonstrates ability to discriminate between positive and negative, and act accordingly

C. **Personal Qualities:** Displays responsibility, self-esteem, sociability, self-management, and integrity and honesty

1. ***Responsibility:*** *Exerts a high level of effort and perseveres towards goal attainment*

a. Demonstrates ability to formulate realistic and useful short and long term goals and complete steps necessary to timely achieve goals
b. Demonstrates ability to make adjustments, revisions, and changes to achieve goals in a cooperative and polite manner
c. Demonstrates ability to focus on task at hand and work to completion
d. Demonstrates good work ethics through regular attendance, adequate classroom preparations, and appropriate use of classroom time
e. Demonstrates maturity to take responsibility for actions
f. Demonstrates ability to cooperatively work in individual, team, and group situations in timely and effective manner

2. ***Self-Esteem:*** *Believes in own self-worth and maintains a positive view of self*
   a. Presents a positive attitude toward tasks
   b. Demonstrates ability to separate work and personal behaviors
   c. Actively participates in learning opportunities by sharing knowledge and skills with peers and instructors
   d. Demonstrates ability to accept personal strengths and weaknesses and builds on positive behaviors
   e. Demonstrates ability to accept and use constructive criticism
   f. Accepts positive reinforcement in an appropriate manner
3. ***Sociability:*** *Demonstrates understanding, friendliness, adaptability, empathy, and politeness in group settings*
   a. Demonstrates appropriate and acceptable social behaviors in interactions
   b. Demonstrates ability to work cooperatively in individual, team, or group situations
   c. Demonstrates active interest in peers by offering assistance, sharing resources, and sharing knowledge in a professional and acceptable manner
   d. Demonstrates professional work ethic by separating work and personal social behaviors and acting accordingly
4. ***Self-Management:*** *Assesses self accurately, sets personal goals, monitors progress, and exhibits self-control*
   a. Accepts personal strengths and weaknesses and uses the same for positive advancement

b. Demonstrates ability to continuously set, assess, choose, and modify objectives as the situation demands in an appropriate manner
c. Demonstrates ability to formulate and follow personal schedules
d. Demonstrates ability to wisely use classroom time
e. Demonstrates use of good study habits and skills
f. Demonstrates maturity to take responsibility for own actions

5. ***Integrity/Honesty:*** *Chooses ethical courses of action*
   a. Knows and demonstrates ability to distinguish between positive and negative behaviors
   b. Demonstrates honesty and integrity in working with peers and supervisors
   c. Takes full responsibility for personal actions
   d. Demonstrates understanding of consequences for negative ethical behaviors and accepts responsibility for same when applicable
   e. Demonstrates positive work and social ethics in undertakings

Appropriate Reference Materials:

1. MASTER Technical Modules:
   LSR-B1 through LSR-B9;
   LSR-C3; and,
   LSR-F2.
2. Calculator Reference Manual

LSR 584
06/040798

LSR 585

MASTER PROGRAM

Fundamentals of Industrial Electronics And Controls

COURSE SYLLABUS

Total lecture hours: 30 **Total lab hours: 45** **Credit hours: 3**

COURSE DESCRIPTION:

This course is for students in the Laser Machining Technology program. It consists of a review of basic electronics theory and then a comprehensive coverage of the control of industrial machinery and processes through the use of electronic circuits and systems. After a review of DC and AC circuit theory, the fundamentals of active devices and digital logic theory, some of the topics covered include: linear integrated circuits, DC and AC motors, industrial control devices, transducers, industrial process control, and programmable controllers.

PREREQUISITES: **Algebra;**
Trigonometry

COURSE OBJECTIVES:

After successful completion of this course, the students will be able to:

1. Know basic DC and AC circuit theory;
2. Know the fundamentals of analog devices: diodes and transducers;
3. Know the fundamentals of digital logic circuitry and microprocessor control;
4. Know linear integrated circuits and their functions;
5. Know the operation of DC and AC motors;
6. Know industrial control devices and power control circuits;
7. Know industrial process control and how it relates to laser machining;
8. Know industrial telemetry and data communication; and,
9. Know sequential process control and programmable controllers.

REQUIRED COURSE MATERIALS:

Textbook: *Industrial Electronics*, Humphries and Sheets, Delmar Publishers, Inc., Latest Edition

Lab Manual: None

Supplementary Materials: Instructor's lecture and laboratory handouts

Supplies: None

METHOD OF INSTRUCTION:

Lecture: Didactic presentations will include lecture, handouts, and class problems.

Laboratory: Laboratory will be hands–on activities.

Method of Evaluation: A student's grade will be based on multiple measures of performance. The assessment will measure development of independent critical thinking skills and will include evaluation of the student's ability to:

1. Perform the manipulative skills of the craft as required to satisfactorily complete laboratory assignments;
2. Apply theory to laboratory assignments;
3. Perform on written, oral, or practical examinations;
4. Perform on outside assignments including writing assignments;
5. Contribute to class discussions;
6. Maintain attendance per current policy; and,
7. Follow all shop rules and safety regulations as stated in the laboratory manual.

LECTURE OUTLINE:

Lecture Topics

DC and AC Circuit Theory
Voltage, Current, Resistance and Power
Ohm's Law and Power and Energy
Series, Parallel and Series-Parallel Circuits
Alternating Current and Voltage
Capacitors, Inductors and Transformers
RC, RL and RLC Circuits
Polyphase Systems
Fundamentals of Analog Active Devices
Introduction to Semiconductors
Diodes and Applications
Transistors
Power Supply Circuits
Fundamentals of Digital Logic
Circuitry and Microprocessors
Number Systems and Codes
Logic Gates, Boolean Algebra and
Combinational Logic
Flip–Flops, Arithmetic Operations and Circuits

Counters, Registers and Memory
IC's and MSI Logic Circuits
Interfacing with A/D and D/A Circuits
Microprocessors, Microcontrollers and Microcomputers
Operational Amplifiers for Industrial Applications
Linear IC's for Industrial Applications
Motors and Industrial Control Devices
Wound–Field DC Motors and Generators
Brushless and Stepper DC Motors
AC Motors
Industrial Control Devices
Industrial and Power Control Devices
Transducers and Industrial Process Control
Pulse Modulation
Industrial Telemetry and Data Communications
Sequential Process Control
Programmable Controllers 1
Programmable Controllers 2
FINAL EXAM

Total Lecture Hours 30

LAB OUTLINE:

Lab Topics
DC and AC Circuit Analysis
Diodes and Applications
Transistors
Power Supply Circuits
Digital Logic Circuitry
Operational Amplifiers
Linear IC's for Industrial Applications
Motors and Industrial Control Devices
Transducers and Industrial Process Control
Industrial Telemetry and Data Communications
Programmable Controllers

Total Lab Hours 45

COURSE OBJECTIVES: SCANS COMPETENCIES

The Secretary's Commission on Achieving Necessary Skills (SCANS), U.S. Department of Labor, has identified in its "AMERICA 2000 REPORT" that all students should develop a new set of competencies and foundation skills if they are to enjoy a productive, full and satisfying life. These are in addition to the Technical Workplace Competencies required by industry. SCANS is made up of five competencies and a three-part foundation of skills and personal qualities that are needed for solid job performance.

All italicized headings in this section are direct quotations from "What Work Requires of Schools: A SCANS Report for America 2000."

The following activities will be performed by each student for successful completion of this course:

I. COMPETENCIES

- *A.* ***Resources:*** *Identifies, organizes, plans, and allocates resources*
  1. Allocates time to complete assigned tasks on schedule
  2. Determines and allocates required materials and resources for meeting objectives
  3. Evaluates skills, performance, and quality of work and provides feedback
- *B.* ***Interpersonal:*** *Works with others*
  1. Participates as a member of the team, contributing to group effort
  2. Provides individual assistance/direction to peers as requested
  3. Determines and meets expectations
  4. Exercises leadership qualities to effectively communicate ideas and make decisions.
  5. Negotiates resources in order to accomplish objectives
  6. Works well with all members of the class
- *C.* ***Information:*** *Acquires and uses information*
  1. Acquires and evaluates information
  2. Organizes and maintains information
  3. Interprets and communicates information
- *D.* ***Systems:*** *Understands complex inter-relationships*
  1. Understands and works well with social, organizational, and technological systems
  2. Monitors and corrects performance of system during operation
  3. Recommends modifications to system to improve performance
- *E.* ***Technology:*** *Works with a variety of technologies*
  1. Chooses relevant procedures, tools, and equipment
  2. Applies appropriate procedures and techniques to accomplish tasks
  3. Identifies or solves problems to maintain equipment

II. FOUNDATION SKILLS

- A. **Basic Skills:** Reads, writes, performs arithmetic and mathematical operations, listens and speaks
  - *1.* ***Reading:*** *Locates, understands, and interprets written information in prose and in documents such as manuals, graphs, and schedules*

a. Demonstrates basic reading skills including abilities to perceive main ideas, draw appropriate conclusions, detect a sequence, locate answers, find facts, and infer from written texts
b. Demonstrates course specific reading skills including abilities to read, interpret, and comprehend information from text and supplemental materials on a level to facilitate productive independent and group study
c. Demonstrates ability to read, interpret, and utilize information from course specific instruments (i.e., charts, diagrams, graphs, schematics, blueprints, flow charts, etc.)
d. Demonstrates ability to read, interpret, and follow schedules and procedural instructions in a timely and appropriate manner
e. Demonstrates ability to choose and use most appropriate reading method (skim, scan, or read for comprehension) for materials

2. ***Writing:*** *Communicates thoughts, ideas, information, and messages in writing; and creates documents such as letters, directions, manuals, reports, graphs, and flow charts*
   a. Demonstrates basic writing skills including abilities to produce written documents which conform with accepted grammatical and communication standards required for effective daily functioning
   b. Demonstrates effective written study skills including note taking, maintaining course specific journals, workbooks, manuals, etc.
   c. Demonstrates technical writing skills in preparing outlines, summaries, time lines, flow charts, diagrams, etc. appropriate to materials covered
   d. Demonstrates ability to complete all required writings in a timely, complete, and professional manner
   e. Demonstrates competence in subject matter through the organization and presentation of answers to required written assessments
3. ***Arithmetic/Mathematics:*** *Perform basic computations and approaches practical problems by choosing appropriately from a variety of mathematical techniques*
   a. Demonstrates proficiency in basic arithmetic functions including ability to add, subtract, multiply, and divide whole numbers, fractions, decimals, and percentages

b. Demonstrates ability to read, comprehend, and select appropriate math procedures to work basic math problems
c. Demonstrates ability to understand and perform multi-step computations
d. Demonstrates ability to read, interpret, and use standard measuring devices
e. Demonstrates ability to comprehend, retain, and utilize course specific measuring devices effectively
f. Demonstrates ability to understand, retain, and utilize higher mathematical formulas and functions required for course specific math performance
g. Demonstrates ability to appropriately transfer mathematical calculations and information from paper to machines

4. ***Listening:*** *Receives, attends to, interprets, and responds to verbal messages and other cues*
   a. Functions at minimal or above required hearing levels to receive, attend, interpret, and respond to verbal messages and instructions and to safely operate machinery
   b. Demonstrates ability to hear, comprehend, and appropriately follow directions
   c. Demonstrates auditory ability to hear, comprehend, and utilize verbal classroom as well as other auditory instruction
   d. Demonstrates ability to discriminate between essential and non-essential verbal information and react appropriately
   e. Demonstrates ability to focus and fine-tune listening skills to receive, interpret, and respond to various sounds
   f. Demonstrates ability and maturity to seek and receive additional individualized instruction as needed

5. ***Speaking:*** *Organizes ideas and communicates orally*
   a. Demonstrates appropriate listening and speaking skills in personal conversations
   b. Demonstrates ability to choose and organize appropriate words to effectively communicate
   c. Demonstrates ability to speak clearly and distinctly with appropriate volume, tone, and body language for situation
   d. Demonstrates ability to spontaneously organize and present appropriate answers and/or short presentations for classroom and /or assessment purposes
   e. Demonstrates ability to formulate, organize, and deliver major presentations to peers or groups

f. Demonstrates ability to speak effectively in one-on-one, small group, or large group presentations
g. Demonstrates ability to take responsibility for presentations

B. Thinking Skills: Thinks creatively, makes decisions, solves problems, visualizes, knows how to learn and reasons

1. ***Decision Making:*** *Specifies goals and constraints, generates alternatives, considers risks, and evaluates and chooses best alternative*

a. Demonstrates ability to objectively assess personal strengths and weaknesses
b. Demonstrates ability to set realistic short-term and long-term goals
c. Demonstrates ability to recognize and distinguish between positive and negative alternatives
d. Demonstrates ability to identify potential pitfalls and take evasive actions
e. Demonstrates ability to objectively and responsibly evaluate alternatives by testing hypotheses and selecting most appropriate response
f. Demonstrates ability to profit from negative evaluations or mistakes by reformulating, redirecting, reconstructing, or retesting alternatives
g. Demonstrates maturity in taking responsibility for decisions

2. ***Problem Solving:*** *Recognizes problems and devises and implements plan of action*

a. Demonstrates ability to detect problem through observation, inquiry, or directive
b. Demonstrates ability to grasp appropriate overview and degree of seriousness of problem and to behave responsibly in situation
c. Demonstrates ability to generate alternatives or options for problem solution
d. Demonstrates ability to research options, assess and evaluate options, and determine appropriate and best solution
e. Demonstrates ability to initiate and effect solution
f. Demonstrates ability to take responsibility for outcomes
g. Demonstrates ability to effectively problem solve in individual, team, or group situations

3. ***Seeing Things In the Mind's Eye:*** *Organizes, and processes symbols, pictures, graphs, objects, and other information*

a. Functions at minimum or above required visual levels in order to see, interpret, attend and respond to visual imagery and meet safety requirements for necessary machinery
b. Demonstrates ability to read, interpret, and act upon signs, symbols, and other visual cues
c. Demonstrates ability to visually discriminate in gross and fine imagery
d. Demonstrates ability to visualize abstractly
e. Demonstrates ability to apply visual imagery to applied tasks

4. ***Knowing How to Learn:*** *Use efficient learning techniques to acquire and apply new knowledge and skills*
   a. Demonstrates mastery of basic reading, math, and language skills through application
   b. Demonstrates ability to translate abstract theory into practical application
   c. Demonstrates ability to incorporate and generalize new learning into a sequential learning process
   d. Demonstrates knowledge of good study skills and learning habits

5. ***Reasoning:*** *Discovers a rule or principle underlying the relationship between two or more objects and applies it when solving a problem*
   a. Demonstrates use of simple logic
   b. Demonstrates ability to distinguish relationships
   c. Demonstrates ability to determine and isolate factors in relationships
   d. Demonstrates and applies knowledge through practice
   e. Recognizes that attitudes, skills, and practice are essential to productivity
   f. Demonstrates ability to discriminate between positive and negative, and act accordingly

C. **Personal Qualities:** Displays responsibility, self-esteem, sociability, self-management, and integrity and honesty

1. ***Responsibility:*** *Exerts a high level of effort and perseveres towards goal attainment*
   a. Demonstrates ability to formulate realistic and useful short and long term goals and complete steps necessary to timely achieve goals
   b. Demonstrates ability to make adjustments, revisions, and changes to achieve goals in a cooperative and polite manner

c. Demonstrates ability to focus on task at hand and work to completion
d. Demonstrates good work ethics through regular attendance, adequate classroom preparations, and appropriate use of classroom time
e. Demonstrates maturity to take responsibility for actions
f. Demonstrates ability to cooperatively work in individual, team, and group situations in timely and effective manner

2. ***Self-Esteem:*** *Believes in own self-worth and maintains a positive view of self*
   a. Presents a positive attitude toward tasks
   b. Demonstrates ability to separate work and personal behaviors
   c. Actively participates in learning opportunities by sharing knowledge and skills with peers and instructors
   d. Demonstrates ability to accept personal strengths and weaknesses and builds on positive behaviors
   e. Demonstrates ability to accept and use constructive criticism
   f. Accepts positive reinforcement in an appropriate manner
3. ***Sociability:*** *Demonstrates understanding, friendliness, adaptability, empathy, and politeness in group settings*
   a. Demonstrates appropriate and acceptable social behaviors in interactions
   b. Demonstrates ability to work cooperatively in individual, team, or group situations
   c. Demonstrates active interest in peers by offering assistance, sharing resources, and sharing knowledge in a professional and acceptable manner
   d. Demonstrates professional work ethic by separating work and personal social behaviors and acting accordingly
4. ***Self-Management:*** *Assesses self accurately, sets personal goals, monitors progress, and exhibits self-control*
   a. Accepts personal strengths and weaknesses and uses the same for positive advancement
   b. Demonstrates ability to continuously set, assess, choose, and modify objectives as the situation demands in an appropriate manner
   c. Demonstrates ability to formulate and follow personal schedules
   d. Demonstrates ability to wisely use classroom time
   e. Demonstrates use of good study habits and skills

f. Demonstrates maturity to take responsibility for own actions

5. *Integrity/Honesty: Chooses ethical courses of action*
   a. Knows and demonstrates ability to distinguish between positive and negative behaviors
   b. Demonstrates honesty and integrity in working with peers and supervisors
   c. Takes full responsibility for personal actions
   d. Demonstrates understanding of consequences for negative ethical behaviors and accepts responsibility for same when applicable
   e. Demonstrates positive work and social ethics in undertakings

Appropriate Reference Materials:

1. MASTER Technical Modules:
   LSR-B1 through LSR-B3;
   LSR-B5 through LSR-B9; and,
   LSR-D1 through LSR-D7.
2. *Fundamentals of Linear Circuits,* Floyd, Merrill Publishers, Latest Edition
3. *Principles of Electric Circuits,* Floyd, Merrill Publishers, Latest Edition
4. *Digital Systems,* Floyd, Merrill Publishers, Latest Edition

LSR 585
06/040798

LSR 591

MASTER PROGRAM

Computer–Aided Design (CAD)

COURSE SYLLABUS

Total lecture hours: 30 **Total lab hours: 45** **Credit hours: 3**

COURSE DESCRIPTION:

The purpose of this course is to introduce the student to the terminology, capabilities, and operation of computer–aided drafting hardware and software. The student will be given graphic laboratory problems to create work files and to develop libraries and elementary drawings utilizing lines, rectangles, circles, arcs and ellipses. Using AutoCAD® as typical computer–aided drafting and design program, students will also learn scaling, rotations, translations, and projections.

PREREQUISITES: **Mechanical Drawing**

COURSE OBJECTIVES:

After successful completion of this course, the students will be able to:

1. Understand the commands and parameters of the AutoCAD system required to create orthographic drawings electronically;
2. Be able to create elementary drawings using lines, arcs, circles and ellipses;
3. Understand how to develop drawing libraries for the purpose of automating the drawing process; and,
4. Understand how to create multi view drawings.

REQUIRED COURSE MATERIALS:

Textbook: *Discovering AutoCAD,* Dix and Riley, Prentice-Hall, Inc., Latest Edition

Lab Manual: None

Supplementary Materials: Handouts

Supplies: Computer Diskettes: 3.5 inch, 1.44 meg HD, DS

BEST COPY AVAILABLE

METHOD OF INSTRUCTION:

Lecture: Didactic presentations will include lecture, handouts, and demonstrations.

Laboratory: Laboratory will be a hands–on process using AutoCAD software.

Method of Evaluation: A student's grade will be based on multiple measures of performance. The assessment will measure development of independent critical thinking skills and will include evaluation of the student's ability to:

1. Perform the manipulative skills of the craft as required to satisfactorily complete laboratory assignments;
2. Apply theory to laboratory assignments;
3. Perform on written, oral, or practical examinations;
4. Perform on outside assignments including writing assignments;
5. Contribute to class discussions;
6. Maintain attendance per current policy; and,
7. Follow all shop rules and safety regulations as stated in the laboratory manual.

LECTURE OUTLINE:

Lecture Topics

Introduction to PCS

Hardware and Software Basics
Understand the Operating System
Understand Directory Structure and How to Manage Files

Introduction to AutoCAD and File Management

Understand How to Save Files in AutoCAD (SAVE, SAVE AS, AUTOSAVE)
Understand the Drawing Editor, Menu Structure
Understand Basic DRAW Commands (LINE, CIRCLE)
Understand How to Enter New Points (Coordinate entry)
Understand Basic EDIT Command (ERASE)

Drawing Settings

Understand How to Set up the Drawing Sheet (LIMITS, UNITS, GRID)
Understand How to Control Cursor Movement (ORTHO, SNAP, DDRMODES)

More Basic Editing Commands

Understand How to Make Changes to Objects on Screen (COPY, MOVE, FILLET,CHAMFER)
Understand How to Group Objects for Editing (WINDOW, CROSSING, REMOVE, ADD, PREVIOUS)

Drawing With Accuracy

BEST COPY AVAILABLE

Understand How to Draw With Object Snap Enabled (OSNAP, DDOSNAP)
Understand how to check the accuracy of the drawing (DIST, LIST, ID)

Organizing Drawing Information

Understand how to create layers (LAYER, DDLMODES)
Understand and identify line styles
Understand how to load and use line types (LINETYPE, LTSCALE)
Understand how to change properties of objects (CHANGE, CHPROP, DDMODIFY)

Controlling the Display of Drawings

Understand How to Change Magnification of Objects (ZOOM Window, Previous, All, Extents, Dynamic)
Understand How to Move the Display Area (PAN)
Understand How to Plot Drawings to a Printer (PLOT)
Understand How to Plot Drawings to a Plotter (PLOT)

Intermediate Drawing Commands

Understand How to Make Parallel Copies of Objects (OFFSET)
Understand How to Make Multiple Copies of Objects (Multiple COPY, Rectangular and Polar ARRAY)
Understand How to Create Arcs (ARC)
Understand How to Put Text on the Drawing (TEXT, DTEXT, STYLE)
Understand How to Draw Centermarks (DIM, CENTER)
Understand How to Draw an Ellipse (ELLIPSE)
Understand How to Draw Polygons(POLYGONS)

MIDTERM EXAM

Intermediate Editing Commands

Understand How to Mirror Objects (MIRROR)
Understand How to Rotate Objects (ROTATE)
Understand How to Change the Length of Existing Objects (STRETCH, EXTEND, TRIM)
Understand How to Edit Text (DDEDIT)
Understand How to Use Noun–Verb Format (GRIPS)

REVIEW EXAM

Creating Multiview Drawings

Understand the Concept of 3rd Angle Projections
Understand How to Create and Place Appropriate Orthogonal Views
Understand How to Draw Construction Lines From One View to Create Other Views
Understand How to Use Existing Geometry to Place Other Views (Point Filters)

Creating Sectioned Drawings
Understand How to Create and Place Appropriate Section Views
Understand How to Put Section Lines on a Drawing (HATCH, BHATCH, PLINE)
Basic Dimensioning
Understand How to Dimension Objects (DIM)
Understand How to Change Direction Settings (DIMVARS)
Advanced Dimensioning
Understand How to Create and Use Dimension Styles (DDIM)
Understand How to Apply Geometric Dimensioning from ANSI Y14.5
Grouping Objects Together as Blocks
Understand How to Create a Block (BLOCK)
Understand How to Bring Blocks Into the Drawing (INSERT, DDINSERT)
Understand How to Make a Block Available Outside the Current Drawing (WBLOCK)
Understand How to Assign Attributes to Blocks (DDATTDEF)
Understand How to Edit Attribute Information (DDATTE)
Using Blocks to Automate the Drawing Process
Understand How to Use Attributes to Create a Bill of Materials and Parts List
Understand How to Create a Standard Parts Library
FINAL COMPREHENSIVE EXAM

Total Lecture Hours 30

LAB OUTLINE:

Lab Topics

AutoCAD Basics: Line Command, Absolute and Relative Coordinates
Line & Circle Commands: Polar Coordinates
Drawing Setup Commands: Creating Arcs
Basic Editing: Copy, Fillet, and Chamfer
Drawing with Accuracy: Object Snaps
Layers and Linetypes. Changing Objects
Printing and Plotting
Multiple Copies: Array; Text Commands
Symmetrical Parts: Mirror Rotating, Extending, and Stretching Objects

Creating and Placing Orthogonal Views
Section Views: Hatch Command
Dimensioning Commands
Dimension Styles and ANSI Y14.5
Grouping Objects Together: Blocks
Using Blocks for Bills of Material and Libraries

Total Lab Hours 45

COURSE OBJECTIVES: SCANS COMPETENCIES

The Secretary's Commission on Achieving Necessary Skills (SCANS), U.S. Department of Labor, has identified in its "AMERICA 2000 REPORT" that all students should develop a new set of competencies and foundation skills if they are to enjoy a productive, full and satisfying life. These are in addition to the Technical Workplace Competencies required by industry. SCANS is made up of five competencies and a three-part foundation of skills and personal qualities that are needed for solid job performance. All italicized headings in this section are direct quotations from "What Work Requires of Schools: A SCANS Report for America 2000."

The following activities will be performed by each student for successful completion of this course:

I. COMPETENCIES

A. ***Resources:*** *Identifies, organizes, plans, and allocates resources*
1. Allocates time to complete assigned tasks on schedule
2. Determines and allocates required materials and resources for meeting objectives
3. Evaluates skills, performance, and quality of work and provides feedback

B. ***Interpersonal:*** *Works with others*
1. Participates as a member of the team, contributing to group effort
2. Provides individual assistance/direction to peers as requested
3. Determines and meets expectations
4. Exercises leadership qualities to effectively communicate ideas and make decisions.
5. Negotiates resources in order to accomplish objectives
6. Works well with all members of the class

C. ***Information:*** *Acquires and uses information*
1. Acquires and evaluates information
2. Organizes and maintains information
3. Interprets and communicates information

D. ***Systems:*** *Understands complex inter-relationships*

1. Understands and works well with social, organizational, and technological systems
2. Monitors and corrects performance of system during operation
3. Recommends modifications to system to improve performance

E. Technology: Works with a variety of technologies

1. Chooses relevant procedures, tools, and equipment
2. Applies appropriate procedures and techniques to accomplish tasks
3. Identifies or solves problems to maintain equipment

II. FOUNDATION SKILLS

A. **Basic Skills:** Reads, writes, performs arithmetic and mathematical operations, listens and speaks

*1. **Reading:** Locates, understands, and interprets written information in prose and in documents such as manuals, graphs, and schedules*

a. Demonstrates basic reading skills including abilities to perceive main ideas, draw appropriate conclusions, detect a sequence, locate answers, find facts, and infer from written texts

b. Demonstrates course specific reading skills including abilities to read, interpret, and comprehend information from text and supplemental materials on a level to facilitate productive independent and group study

c. Demonstrates ability to read, interpret, and utilize information from course specific instruments (i.e., charts, diagrams, graphs, schematics, blueprints, flow charts, etc.)

d. Demonstrates ability to read, interpret, and follow schedules and procedural instructions in a timely and appropriate manner

e. Demonstrates ability to choose and use most appropriate reading method (skim, scan, or read for comprehension) for materials

*2. **Writing:** Communicates thoughts, ideas, information, and messages in writing; and creates documents such as letters, directions, manuals, reports, graphs, and flow charts*

a. Demonstrates basic writing skills including abilities to produce written documents which conform with accepted grammatical and communication standards required for effective daily functioning

b. Demonstrates effective written study skills including note taking, maintaining course specific journals, workbooks, manuals, etc.

c. Demonstrates technical writing skills in preparing outlines, summaries, time lines, flow charts, diagrams, etc. appropriate to materials covered
d. Demonstrates ability to complete all required writings in a timely, complete, and professional manner
e. Demonstrates competence in subject matter through the organization and presentation of answers to required written assessments

3. ***Arithmetic/Mathematics:*** *Perform basic computations and approaches practical problems by choosing appropriately from a variety of mathematical techniques*
   a. Demonstrates proficiency in basic arithmetic functions including ability to add, subtract, multiply, and divide whole numbers, fractions, decimals, and percentages
   b. Demonstrates ability to read, comprehend, and select appropriate math procedures to work basic math problems
   c. Demonstrates ability to understand and perform multi-step computations
   d. Demonstrates ability to read, interpret, and use standard measuring devices
   e. Demonstrates ability to comprehend, retain, and utilize course specific measuring devices effectively
   f. Demonstrates ability to understand, retain, and utilize higher mathematical formulas and functions required for course specific math performance
   g. Demonstrates ability to appropriately transfer mathematical calculations and information from paper to machines

4. ***Listening:*** *Receives, attends to, interprets, and responds to verbal messages and other cues*
   a. Functions at minimal or above required hearing levels to receive, attend, interpret, and respond to verbal messages and instructions and to safely operate machinery
   b. Demonstrates ability to hear, comprehend, and appropriately follow directions
   c. Demonstrates auditory ability to hear, comprehend, and utilize verbal classroom as well as other auditory instruction
   d. Demonstrates ability to discriminate between essential and non-essential verbal information and react appropriately
   e. Demonstrates ability to focus and fine-tune listening skills to receive, interpret, and respond to various sounds

f. Demonstrates ability and maturity to seek and receive additional individualized instruction as needed

5. ***Speaking***: *Organizes ideas and communicates orally*
   a. Demonstrates appropriate listening and speaking skills in personal conversations
   b. Demonstrates ability to choose and organize appropriate words to effectively communicate
   c. Demonstrates ability to speak clearly and distinctly with appropriate volume, tone, and body language for situation
   d. Demonstrates ability to spontaneously organize and present appropriate answers and/or short presentations for classroom and /or assessment purposes
   e. Demonstrates ability to formulate, organize, and deliver major presentations to peers or groups
   f. Demonstrates ability to speak effectively in one-on-one, small group, or large group presentations
   g. Demonstrates ability to take responsibility for presentations

B. Thinking Skills: Thinks creatively, makes decisions, solves problems, visualizes, knows how to learn and reasons

1. ***Decision Making:*** *Specifies goals and constraints, generates alternatives, considers risks, and evaluates and chooses best alternative*
   a. Demonstrates ability to objectively assess personal strengths and weaknesses
   b. Demonstrates ability to set realistic short-term and long-term goals
   c. Demonstrates ability to recognize and distinguish between positive and negative alternatives
   d. Demonstrates ability to identify potential pitfalls and take evasive actions
   e. Demonstrates ability to objectively and responsibly evaluate alternatives by testing hypotheses and selecting most appropriate response
   f. Demonstrates ability to profit from negative evaluations or mistakes by reformulating, redirecting, reconstructing, or retesting alternatives
   g. Demonstrates maturity in taking responsibility for decisions

2. ***Problem Solving:*** *Recognizes problems and devises and implements plan of action*
   a. Demonstrates ability to detect problem through observation, inquiry, or directive

b. Demonstrates ability to grasp appropriate overview and degree of seriousness of problem and to behave responsibly in situation
c. Demonstrates ability to generate alternatives or options for problem solution
d. Demonstrates ability to research options, assess and evaluate options, and determine appropriate and best solution
e. Demonstrates ability to initiate and effect solution
f. Demonstrates ability to take responsibility for outcomes
g. Demonstrates ability to effectively problem solve in individual, team, or group situations

3. ***Seeing Things In the Mind's Eye:*** *Organizes, and processes symbols, pictures, graphs, objects, and other information*
   a. Functions at minimum or above required visual levels in order to see, interpret, attend and respond to visual imagery and meet safety requirements for necessary machinery
   b. Demonstrates ability to read, interpret, and act upon signs, symbols, and other visual cues
   c. Demonstrates ability to visually discriminate in gross and fine imagery
   d. Demonstrates ability to visualize abstractly
   e. Demonstrates ability to apply visual imagery to applied tasks
4. ***Knowing How to Learn:*** *Use efficient learning techniques to acquire and apply new knowledge and skills*
   a. Demonstrates mastery of basic reading, math, and language skills through application
   b. Demonstrates ability to translate abstract theory into practical application
   c. Demonstrates ability to incorporate and generalize new learning into a sequential learning process
   d. Demonstrates knowledge of good study skills and learning habits
5. ***Reasoning:*** *Discovers a rule or principle underlying the relationship between two or more objects and applies it when solving a problem*
   a. Demonstrates use of simple logic
   b. Demonstrates ability to distinguish relationships
   c. Demonstrates ability to determine and isolate factors in relationships
   d. Demonstrates and applies knowledge through practice

e. Recognizes that attitudes, skills, and practice are essential to productivity
f. Demonstrates ability to discriminate between positive and negative, and act accordingly

C. **Personal Qualities:** Displays responsibility, self-esteem, sociability, self-management, and integrity and honesty

1. ***Responsibility:*** *Exerts a high level of effort and perseveres towards goal attainment*
   a. Demonstrates ability to formulate realistic and useful short and long term goals and complete steps necessary to timely achieve goals
   b. Demonstrates ability to make adjustments, revisions, and changes to achieve goals in a cooperative and polite manner
   c. Demonstrates ability to focus on task at hand and work to completion
   d. Demonstrates good work ethics through regular attendance, adequate classroom preparations, and appropriate use of classroom time
   e. Demonstrates maturity to take responsibility for actions
   f. Demonstrates ability to cooperatively work in individual, team, and group situations in timely and effective manner
2. ***Self-Esteem:*** *Believes in own self-worth and maintains a positive view of self*
   a. Presents a positive attitude toward tasks
   b. Demonstrates ability to separate work and personal behaviors
   c. Actively participates in learning opportunities by sharing knowledge and skills with peers and instructors
   d. Demonstrates ability to accept personal strengths and weaknesses and builds on positive behaviors
   e. Demonstrates ability to accept and use constructive criticism
   f. Accepts positive reinforcement in an appropriate manner
3. ***Sociability:*** *Demonstrates understanding, friendliness, adaptability, empathy, and politeness in group settings*
   a. Demonstrates appropriate and acceptable social behaviors in interactions
   b. Demonstrates ability to work cooperatively in individual, team, or group situations
   c. Demonstrates active interest in peers by offering assistance, sharing resources, and sharing knowledge in a professional and acceptable manner

d. Demonstrates professional work ethic by separating work and personal social behaviors and acting accordingly

4. *Self-Management: Assesses self accurately, sets personal goals, monitors progress, and exhibits self-control*
   a. Accepts personal strengths and weaknesses and uses the same for positive advancement
   b. Demonstrates ability to continuously set, assess, choose, and modify objectives as the situation demands in an appropriate manner
   c. Demonstrates ability to formulate and follow personal schedules
   d. Demonstrates ability to wisely use classroom time
   e. Demonstrates use of good study habits and skills
   f. Demonstrates maturity to take responsibility for own actions

5. *Integrity/Honesty: Chooses ethical courses of action*
   a. Knows and demonstrates ability to distinguish between positive and negative behaviors
   b. Demonstrates honesty and integrity in working with peers and supervisors
   c. Takes full responsibility for personal actions
   d. Demonstrates understanding of consequences for negative ethical behaviors and accepts responsibility for same when applicable
   e. Demonstrates positive work and social ethics in undertakings

Appropriate Reference Materials:

1. MASTER Technical Modules:
   LSR-B1 through LSR-B4;
   LSR-B6 through LSR-B7;
   LSR-B9;
   LSR-C3;
   LSR-H1 through LSR-H15;
   LSR-J4 through LSR-J5;
   LSR-J7;
   LSR-J9; and,
   LSR-J12
2. *ANSI Y14.5* - (Dimensioning and Tolerancing), Latest Edition
3. Any text on Drafting
4. *AutoCAD Reference Manual*, Latest Edition

LSR 589

MASTER PROGRAM

Computer Numerical Control

COURSE SYLLABUS

Total lecture hours: 30 **Total lab hours/week: 45** **Credit hours: 3**

COURSE DESCRIPTION:

This course is an introduction to the fundamental concepts of Computer Numerical Control (CNC). The importance of numerical control to manufacturing and productivity is discussed with different types of CNC systems. Special emphasis will be placed on programming laser CNC equipment. Coverage includes writing programs to perform three-axis hole and a variety of milling and cutting operations using the equipment available in our labs.

PREREQUISITES: **Machine Tool Techniques 1**

COURSE OBJECTIVES:

After successful completion of this course, the students will be able to:

1. Understand the significance of laboratory safety;
2. Understand the Cartesian coordinate system as employed in CNC machining;
3. Understand how a part is processed for CNC application;
4. Understand basic part geometry and tool action statements in programming;
5. Use multiple tooling in the machining center;
6. Manufacture parts on the school's milling machines; and,
7. Perform taping operations on the milling machines.

REQUIRED COURSE MATERIALS:

Textbook: *Learning Computer Numerical Control,* Michael Janke, Delmar Publishers, Inc., Latest Edition

Lab Manual: None

Supplementary Materials: Instructor Handouts

Supplies: 2" three–ring binder
Computer Diskettes, 3.5 inch, 1.44 meg, high density
Safety Glasses

BEST COPY AVAILABLE

METHOD OF INSTRUCTION:

Lecture: Didactic presentations will include lecture, handouts, and demonstrations.

Laboratory: Laboratory will be a hands–on CNC programming and machining process.

Method of Evaluation: A student's grade will be based on multiple measures of performance. The assessment will measure development of independent critical thinking skills and will include evaluation of the student's ability to:

1. Perform the manipulative skills of the craft as required to satisfactorily complete laboratory assignments;
2. Apply theory to laboratory assignments;
3. Perform on written, oral, or practical examinations;
4. Perform on outside assignments including writing assignments;
5. Contribute to class discussions;
6. Maintain attendance per current policy; and,
7. Follow all shop rules and safety regulations as stated in the laboratory manual.

LECTURE OUTLINE:

This course will be taught using weekly handouts in conjunction with assignments from the text.

Programming, Setup and Operations *via*
Matsuura MC-500V2 with Yasnac MX1 Controls

Lecture Topics

Apply Machine Specific Nomenclature and Terminology

Discuss CNC machine specifications
Start up the machine
Operate the machine's keyboard and function keys
Establish radius offsets
Perform programming basics at the MCU (machine control unit)
Prove out a program
Load and run a part program

Investigate the Cartesian Coordinate System as Applied to a CNC Mill or Laser

Discuss the Cartesian coordinate system
Discuss the basics of a coordinate measurement system
Plot points in an XYZ coordinate system
Set (G90) and program in absolute coordinates
Set (G91) and program in incremental coordinates

BEST COPY AVAILABLE

Apply CNC Programming Language
Discuss word-address and variable block formats
Discuss standard programming formats such as FANUC
Discuss the concept of modal address
Perform Start Up, Tool Changing, and Ending of Programs
Start the machine
Zero the machine to the part
Discuss and program tool changing
Discuss and program the ending of a CNC program for both mill and laser
Perform Positioning and Basic Drilling
Start and stop the spindle
Initiate the drilling cycle
Program using the R-level to avoid obstructions
Cancel the drilling cycle
Create a Sub-Program
Study the applications of sub-programming
Study the CNC codes used in sub-programming (M98, P###, L##)
Call a sub-program (M98)
End a sub-program (M99)
Perform Contouring
Initiate rapid traverse (G00)
Perform linear cutting (G01)
Perform the necessary trigonometry to obtain program coordinates
Perform circular cutting (G02 and G03 with I, J, K parameters)
Discuss how to select each of the three orthogonal planes (G17, G18, G19)
Apply Tool Radius Compensation
Understand the purpose and application of tool radius compensation
Turn on cutter comp left (G41)
Turn on cutter comp right (G42)
Turn off (cancel) cutter comp (G40)
Perform Program Preparation
Identify program planning steps
Set beam size and power (laser applications)
Determine cutting depth (mill) or penetration (laser)
Determine cutting speed (mill only) and feed
Determine and design fixtures for part holding
Apply Special Laser Coding Parameters
Select assist gas: oxygen low

Select assist gas: oxygen high
Select assist gas: Nitrogen
Select assist gas: air
Turn on and cancel selected assist gas
Set continuous wave, gated pulsing, super pulsing, and hyper pulsing

Total Lecture Hours 30

LAB OUTLINE:

Lab Topics

Machine Specifications
Matsuura Controls and Operations
Cartesian Coordinate System
G and M Codes
Positioning and Drilling Programs
Positioning and Drilling Using Sub–Programs
Rapid Traverse—linear and Circular Cutting
Contour Programming
Contour Programming with Tool Radius Compensation (TRC)
Contour Programming with TRC and Sub–Programming
Drilling and Milling Using Sub–Programming and TRC

Total Lab Hours 45

COURSE OBJECTIVES: SCANS COMPETENCIES

The Secretary's Commission on Achieving Necessary Skills (SCANS), U.S. Department of Labor, has identified in its "AMERICA 2000 REPORT" that all students should develop a new set of competencies and foundation skills if they are to enjoy a productive, full and satisfying life. These are in addition to the Technical Workplace Competencies required by industry. SCANS is made up of five competencies and a three-part foundation of skills and personal qualities that are needed for solid job performance. All italicized headings in this section are direct quotations from "What Work Requires of Schools: A SCANS Report for America 2000."

The following activities will be performed by each student for successful completion of this course:

I. COMPETENCIES

A. ***Resources:*** *Identifies, organizes, plans, and allocates resources*

1. Allocates time to complete assigned tasks on schedule
2. Determines and allocates required materials and resources for meeting objectives

3. Evaluates skills, performance, and quality of work and provides feedback

B. ***Interpersonal:*** *Works with others*

1. Participates as a member of the team, contributing to group effort
2. Provides individual assistance/direction to peers as requested
3. Determines and meets expectations
4. Exercises leadership qualities to effectively communicate ideas and make decisions.
5. Negotiates resources in order to accomplish objectives
6. Works well with all members of the class

C. ***Information:*** *Acquires and uses information*

1. Acquires and evaluates information
2. Organizes and maintains information
3. Interprets and communicates information

D. ***Systems:*** *Understands complex inter-relationships*

1. Understands and works well with social, organizational, and technological systems
2. Monitors and corrects performance of system during operation
3. Recommends modifications to system to improve performance

E. ***Technology:*** *Works with a variety of technologies*

1. Chooses relevant procedures, tools, and equipment
2. Applies appropriate procedures and techniques to accomplish tasks
3. Identifies or solves problems to maintain equipment

II. FOUNDATION SKILLS

A. Basic Skills: Reads, writes, performs arithmetic and mathematical operations, listens and speaks

1. ***Reading:*** *Locates, understands, and interprets written information in prose and in documents such as manuals, graphs, and schedules*

a. Demonstrates basic reading skills including abilities to perceive main ideas, draw appropriate conclusions, detect a sequence, locate answers, find facts, and infer from written texts

b. Demonstrates course specific reading skills including abilities to read, interpret, and comprehend information from text and supplemental materials on a level to facilitate productive independent and group study

c. Demonstrates ability to read, interpret, and utilize information from course specific instruments (i.e., charts, diagrams, graphs, schematics, blueprints, flow charts, etc.)

d. Demonstrates ability to read, interpret, and follow schedules and procedural instructions in a timely and appropriate manner
e. Demonstrates ability to choose and use most appropriate reading method (skim, scan, or read for comprehension) for materials

2. ***Writing:*** *Communicates thoughts, ideas, information, and messages in writing; and creates documents such as letters, directions, manuals, reports, graphs, and flow charts*
   a. Demonstrates basic writing skills including abilities to produce written documents which conform with accepted grammatical and communication standards required for effective daily functioning
   b. Demonstrates effective written study skills including note taking, maintaining course specific journals, workbooks, manuals, etc.
   c. Demonstrates technical writing skills in preparing outlines, summaries, time lines, flow charts, diagrams, etc. appropriate to materials covered
   d. Demonstrates ability to complete all required writings in a timely, complete, and professional manner
   e. Demonstrates competence in subject matter through the organization and presentation of answers to required written assessments

3. ***Arithmetic/Mathematics:*** *Perform basic computations and approaches practical problems by choosing appropriately from a variety of mathematical techniques*
   a. Demonstrates proficiency in basic arithmetic functions including ability to add, subtract, multiply, and divide whole numbers, fractions, decimals, and percentages
   b. Demonstrates ability to read, comprehend, and select appropriate math procedures to work basic math problems
   c. Demonstrates ability to understand and perform multi-step computations
   d. Demonstrates ability to read, interpret, and use standard measuring devices
   e. Demonstrates ability to comprehend, retain, and utilize course specific measuring devices effectively
   f. Demonstrates ability to understand, retain, and utilize higher mathematical formulas and functions required for course specific math performance

g. Demonstrates ability to appropriately transfer mathematical calculations and information from paper to machines

4. ***Listening:*** *Receives, attends to, interprets, and responds to verbal messages and other cues*
   a. Functions at minimal or above required hearing levels to receive, attend, interpret, and respond to verbal messages and instructions and to safely operate machinery
   b. Demonstrates ability to hear, comprehend, and appropriately follow directions
   c. Demonstrates auditory ability to hear, comprehend, and utilize verbal classroom as well as other auditory instruction
   d. Demonstrates ability to discriminate between essential and non-essential verbal information and react appropriately
   e. Demonstrates ability to focus and fine-tune listening skills to receive, interpret, and respond to various sounds
   f. Demonstrates ability and maturity to seek and receive additional individualized instruction as needed

5. ***Speaking:*** *Organizes ideas and communicates orally*
   a. Demonstrates appropriate listening and speaking skills in personal conversations
   b. Demonstrates ability to choose and organize appropriate words to effectively communicate
   c. Demonstrates ability to speak clearly and distinctly with appropriate volume, tone, and body language for situation
   d. Demonstrates ability to spontaneously organize and present appropriate answers and/or short presentations for classroom and /or assessment purposes
   e. Demonstrates ability to formulate, organize, and deliver major presentations to peers or groups
   f. Demonstrates ability to speak effectively in one-on-one, small group, or large group presentations
   g. Demonstrates ability to take responsibility for presentations

B. Thinking Skills: Thinks creatively, makes decisions, solves problems, visualizes, knows how to learn and reasons

1. ***Decision Making:*** *Specifies goals and constraints, generates alternatives, considers risks, and evaluates and chooses best alternative*
   a. Demonstrates ability to objectively assess personal strengths and weaknesses

b. Demonstrates ability to set realistic short-term and long-term goals
c. Demonstrates ability to recognize and distinguish between positive and negative alternatives
d. Demonstrates ability to identify potential pitfalls and take evasive actions
e. Demonstrates ability to objectively and responsibly evaluate alternatives by testing hypotheses and selecting most appropriate response
f. Demonstrates ability to profit from negative evaluations or mistakes by reformulating, redirecting, reconstructing, or retesting alternatives
g. Demonstrates maturity in taking responsibility for decisions

2. ***Problem Solving:*** *Recognizes problems and devises and implements plan of action*
   a. Demonstrates ability to detect problem through observation, inquiry, or directive
   b. Demonstrates ability to grasp appropriate overview and degree of seriousness of problem and to behave responsibly in situation
   c. Demonstrates ability to generate alternatives or options for problem solution
   d. Demonstrates ability to research options, assess and evaluate options, and determine appropriate and best solution
   e. Demonstrates ability to initiate and effect solution
   f. Demonstrates ability to take responsibility for outcomes
   g. Demonstrates ability to effectively problem solve in individual, team, or group situations

3. ***Seeing Things In the Mind's Eye:*** *Organizes, and processes symbols, pictures, graphs, objects, and other information*
   a. Functions at minimum or above required visual levels in order to see, interpret, attend and respond to visual imagery and meet safety requirements for necessary machinery
   b. Demonstrates ability to read, interpret, and act upon signs, symbols, and other visual cues
   c. Demonstrates ability to visually discriminate in gross and fine imagery
   d. Demonstrates ability to visualize abstractly
   e. Demonstrates ability to apply visual imagery to applied tasks

4. ***Knowing How to Learn:*** *Use efficient learning techniques to acquire and apply new knowledge and skills*
   a. Demonstrates mastery of basic reading, math, and language skills through application
   b. Demonstrates ability to translate abstract theory into practical application
   c. Demonstrates ability to incorporate and generalize new learning into a sequential learning process
   d. Demonstrates knowledge of good study skills and learning habits
5. ***Reasoning:*** *Discovers a rule or principle underlying the relationship between two or more objects and applies it when solving a problem*
   a. Demonstrates use of simple logic
   b. Demonstrates ability to distinguish relationships
   c. Demonstrates ability to determine and isolate factors in relationships
   d. Demonstrates and applies knowledge through practice
   e. Recognizes that attitudes, skills, and practice are essential to productivity
   f. Demonstrates ability to discriminate between positive and negative, and act accordingly

C. **Personal Qualities:** Displays responsibility, self-esteem, sociability, self-management, and integrity and honesty
1. ***Responsibility:*** *Exerts a high level of effort and perseveres towards goal attainment*
   a. Demonstrates ability to formulate realistic and useful short and long term goals and complete steps necessary to timely achieve goals
   b. Demonstrates ability to make adjustments, revisions, and changes to achieve goals in a cooperative and polite manner
   c. Demonstrates ability to focus on task at hand and work to completion
   d. Demonstrates good work ethics through regular attendance, adequate classroom preparations, and appropriate use of classroom time
   e. Demonstrates maturity to take responsibility for actions
   f. Demonstrates ability to cooperatively work in individual, team, and group situations in timely and effective manner
2. ***Self-Esteem:*** *Believes in own self-worth and maintains a positive view of self*
   a. Presents a positive attitude toward tasks

b. Demonstrates ability to separate work and personal behaviors
c. Actively participates in learning opportunities by sharing knowledge and skills with peers and instructors
d. Demonstrates ability to accept personal strengths and weaknesses and builds on positive behaviors
e. Demonstrates ability to accept and use constructive criticism
f. Accepts positive reinforcement in an appropriate manner

3. ***Sociability:*** *Demonstrates understanding, friendliness, adaptability, empathy, and politeness in group settings*
   a. Demonstrates appropriate and acceptable social behaviors in interactions
   b. Demonstrates ability to work cooperatively in individual, team, or group situations
   c. Demonstrates active interest in peers by offering assistance, sharing resources, and sharing knowledge in a professional and acceptable manner
   d. Demonstrates professional work ethic by separating work and personal social behaviors and acting accordingly
4. ***Self-Management:*** *Assesses self accurately, sets personal goals, monitors progress, and exhibits self-control*
   a. Accepts personal strengths and weaknesses and uses the same for positive advancement
   b. Demonstrates ability to continuously set, assess, choose, and modify objectives as the situation demands in an appropriate manner
   c. Demonstrates ability to formulate and follow personal schedules
   d. Demonstrates ability to wisely use classroom time
   e. Demonstrates use of good study habits and skills
   f. Demonstrates maturity to take responsibility for own actions
5. ***Integrity/Honesty:*** *Chooses ethical courses of action*
   a. Knows and demonstrates ability to distinguish between positive and negative behaviors
   b. Demonstrates honesty and integrity in working with peers and supervisors
   c. Takes full responsibility for personal actions
   d. Demonstrates understanding of consequences for negative ethical behaviors and accepts responsibility for same when applicable
   e. Demonstrates positive work and social ethics in undertakings

Appropriate Reference Materials:

1. MASTER Technical Modules:
   - LSR-B1 through LSR-B4;
   - LSR-B6 through LSR-B7;
   - LSR-B9;
   - LSR-C5;
   - LSR-F1 through LSR-F10;
   - LSR-I2;
   - LSR-I6;
   - LSR-J3;
   - LSR-J6;
   - LSR-J8;
   - LSR-J10; and,
   - LSR-J13.
2. Matsuura Reference Manual, Latest Edition
3. Yasnac MX1 Reference Manual, Latest Edition

LSR 589
06/040798

LSR 594

MASTER PROGRAM

Modern Optics

COURSE SYLLABUS

Total lecture hours: 30 **Total lab hours: 45** **Credit hours: 3**

COURSE DESCRIPTION:

This course will introduce the student to the basic theories of geometric and wave optics. Topics to be covered will include the rectilinear propagation of light, elementary image formation, lenses, prisms, ray tracing, basic wave theory, interference, diffraction, polarization, and the analysis of optical systems. Classroom lectures will be supplemented with experimental demonstrations.

PREREQUISITES: **Algebra I and II; Trigonometry**

COURSE OBJECTIVES:

After successful completion of this course, the students will be able to:

1. Understand basic theory of light including reflection and refraction;
2. Understand geometric optics including optical components, hardware, and systems;
3. Understand physical optics including the wave nature of light, polarization, diffraction and interference; and,
4. Understand basic principles of radiometry and photometry including measurement technique.

REQUIRED COURSE MATERIALS:

Textbook: *Introduction to Classical and Modern Optics*, Meyer–Arendt, Prentice-Hall, Latest Edition
Geometric Optics, CORD Communications, Laser Electro–Optics Series, Latest Edition
Light Sources and Wave Optics, CORD Communications, Laser Electro–Optics Series, Latest Edition

Lab Manual: None

Supplementary Materials: Instructor's Notes and Laboratory Handouts

METHOD OF INSTRUCTION:

Lecture: Didactic presentations will include lecture, handouts, and demonstrations.

Laboratory: Laboratory will be hands–on and will be on selected experiments in geometric and physical optics as well as radiometry and photometry.

Method of Evaluation: A student's grade will be based on multiple measures of performance. The assessment will measure development of independent critical thinking skills and will include evaluation of the student's ability to:

1. Perform the manipulative skills of the craft as required to satisfactorily complete laboratory assignments;
2. Apply theory to laboratory assignments;
3. Perform on written, oral, or practical examinations;
4. Perform on outside assignments including writing assignments;
5. Contribute to class discussions;
6. Maintain attendance per current policy; and,
7. Follow all shop rules and safety regulations as stated in the laboratory manual.

LECTURE OUTLINE:

Lecture Topics

Introduction to Light
What is Light?
Propagation of Light
The Electromagnetic Spectrum
Reflection and Refraction
Index of Refraction
Snell's Law
Geometric Optics
Prisms
Thin Lenses
Thin Lens Equations
Thick Lenses
Geometric Ray Tracing
Magnification
Mirrors
Telescopes
Review and Midterm Exam
Wave Optics
Light as a Wave Phenomenon
Simple Harmonic Motion

Polarization
Interference
Coherence
Diffraction
Radiometry and Photometry
Absorption of Light
Optical Density
Optical Filters
Optical Power Meters
Irradiance Measurement
Review and Final Exam

Total Lecture Hours 30

LAB OUTLINE:

Lab Topics
Reflection and Refraction at Plane Surfaces
Refraction at Spherical Surfaces
Imaging with a Single Lens
Imaging with Multiple Thin Lenses
F–Stops and Apertures
Beam–Expanding Collimators
Young's Double Slit Interference
Thin Film Interference
Determine Surface Flatness by Interference
Fraunhofer (Far Field) Diffraction
Fresnel (Near Field) Diffraction
Measure Beam Divergence and Spot Size
Diffraction Gratings
Polarization

Total Lab Hours 45

COURSE OBJECTIVES: SCANS COMPETENCIES

The Secretary's Commission on Achieving Necessary Skills (SCANS), U.S. Department of Labor, has identified in its "AMERICA 2000 REPORT" that all students should develop a new set of competencies and foundation skills if they are to enjoy a productive, full and satisfying life. These are in addition to the Technical Workplace Competencies required by industry. SCANS is made up of five competencies and a three-part foundation of skills and personal qualities that are needed for solid job performance. All italicized headings in this section are direct quotations from "What Work Requires of Schools: A SCANS Report for America 2000."

The following activities will be performed by each student for successful completion of this course:

I. COMPETENCIES

- *A.* ***Resources:*** *Identifies, organizes, plans, and allocates resources*
  1. Allocates time to complete assigned tasks on schedule
  2. Determines and allocates required materials and resources for meeting objectives
  3. Evaluates skills, performance, and quality of work and provides feedback
- *B.* ***Interpersonal:*** *Works with others*
  1. Participates as a member of the team, contributing to group effort
  2. Provides individual assistance/direction to peers as requested
  3. Determines and meets expectations
  4. Exercises leadership qualities to effectively communicate ideas and make decisions.
  5. Negotiates resources in order to accomplish objectives
  6. Works well with all members of the class
- *C.* ***Information:*** *Acquires and uses information*
  1. Acquires and evaluates information
  2. Organizes and maintains information
  3. Interprets and communicates information
- *D.* ***Systems:*** *Understands complex inter-relationships*
  1. Understands and works well with social, organizational, and technological systems
  2. Monitors and corrects performance of system during operation
  3. Recommends modifications to system to improve performance
- *E.* ***Technology:*** *Works with a variety of technologies*
  1. Chooses relevant procedures, tools, and equipment
  2. Applies appropriate procedures and techniques to accomplish tasks
  3. Identifies or solves problems to maintain equipment

II. FOUNDATION SKILLS

- A. **Basic Skills:** Reads, writes, performs arithmetic and mathematical operations, listens and speaks
  - *1.* ***Reading:*** *Locates, understands, and interprets written information in prose and in documents such as manuals, graphs, and schedules*
    - a. Demonstrates basic reading skills including abilities to perceive main ideas, draw appropriate conclusions, detect

a sequence, locate answers, find facts, and infer from written texts

b. Demonstrates course specific reading skills including abilities to read, interpret, and comprehend information from text and supplemental materials on a level to facilitate productive independent and group study
c. Demonstrates ability to read, interpret, and utilize information from course specific instruments (i.e., charts, diagrams, graphs, schematics, blueprints, flow charts, etc.)
d. Demonstrates ability to read, interpret, and follow schedules and procedural instructions in a timely and appropriate manner
e. Demonstrates ability to choose and use most appropriate reading method (skim, scan, or read for comprehension) for materials

2. ***Writing:*** *Communicates thoughts, ideas, information, and messages in writing; and creates documents such as letters, directions, manuals, reports, graphs, and flow charts*
   a. Demonstrates basic writing skills including abilities to produce written documents which conform with accepted grammatical and communication standards required for effective daily functioning
   b. Demonstrates effective written study skills including note taking, maintaining course specific journals, workbooks, manuals, etc.
   c. Demonstrates technical writing skills in preparing outlines, summaries, time lines, flow charts, diagrams, etc. appropriate to materials covered
   d. Demonstrates ability to complete all required writings in a timely, complete, and professional manner
   e. Demonstrates competence in subject matter through the organization and presentation of answers to required written assessments
3. ***Arithmetic/Mathematics:*** *Perform basic computations and approaches practical problems by choosing appropriately from a variety of mathematical techniques*
   a. Demonstrates proficiency in basic arithmetic functions including ability to add, subtract, multiply, and divide whole numbers, fractions, decimals, and percentages
   b. Demonstrates ability to read, comprehend, and select appropriate math procedures to work basic math problems

c. Demonstrates ability to understand and perform multi-step computations
d. Demonstrates ability to read, interpret, and use standard measuring devices
e. Demonstrates ability to comprehend, retain, and utilize course specific measuring devices effectively
f. Demonstrates ability to understand, retain, and utilize higher mathematical formulas and functions required for course specific math performance
g. Demonstrates ability to appropriately transfer mathematical calculations and information from paper to machines

4. ***Listening:*** *Receives, attends to, interprets, and responds to verbal messages and other cues*
   a. Functions at minimal or above required hearing levels to receive, attend, interpret, and respond to verbal messages and instructions and to safely operate machinery
   b. Demonstrates ability to hear, comprehend, and appropriately follow directions
   c. Demonstrates auditory ability to hear, comprehend, and utilize verbal classroom as well as other auditory instruction
   d. Demonstrates ability to discriminate between essential and non-essential verbal information and react appropriately
   e. Demonstrates ability to focus and fine-tune listening skills to receive, interpret, and respond to various sounds
   f. Demonstrates ability and maturity to seek and receive additional individualized instruction as needed

5. ***Speaking:*** *Organizes ideas and communicates orally*
   a. Demonstrates appropriate listening and speaking skills in personal conversations
   b. Demonstrates ability to choose and organize appropriate words to effectively communicate
   c. Demonstrates ability to speak clearly and distinctly with appropriate volume, tone, and body language for situation
   d. Demonstrates ability to spontaneously organize and present appropriate answers and/or short presentations for classroom and /or assessment purposes
   e. Demonstrates ability to formulate, organize, and deliver major presentations to peers or groups
   f. Demonstrates ability to speak effectively in one-on-one, small group, or large group presentations

g. Demonstrates ability to take responsibility for presentations

B. Thinking Skills: Thinks creatively, makes decisions, solves problems, visualizes, knows how to learn and reasons

1. ***Decision Making:*** *Specifies goals and constraints, generates alternatives, considers risks, and evaluates and chooses best alternative*

a. Demonstrates ability to objectively assess personal strengths and weaknesses
b. Demonstrates ability to set realistic short-term and long-term goals
c. Demonstrates ability to recognize and distinguish between positive and negative alternatives
d. Demonstrates ability to identify potential pitfalls and take evasive actions
e. Demonstrates ability to objectively and responsibly evaluate alternatives by testing hypotheses and selecting most appropriate response
f. Demonstrates ability to profit from negative evaluations or mistakes by reformulating, redirecting, reconstructing, or retesting alternatives
g. Demonstrates maturity in taking responsibility for decisions

2. ***Problem Solving:*** *Recognizes problems and devises and implements plan of action*

a. Demonstrates ability to detect problem through observation, inquiry, or directive
b. Demonstrates ability to grasp appropriate overview and degree of seriousness of problem and to behave responsibly in situation
c. Demonstrates ability to generate alternatives or options for problem solution
d. Demonstrates ability to research options, assess and evaluate options, and determine appropriate and best solution
e. Demonstrates ability to initiate and effect solution
f. Demonstrates ability to take responsibility for outcomes
g. Demonstrates ability to effectively problem solve in individual, team, or group situations

3. ***Seeing Things In the Mind's Eye:*** *Organizes, and processes symbols, pictures, graphs, objects, and other information*

a. Functions at minimum or above required visual levels in order to see, interpret, attend and respond to visual

BEST COPY AVAILABLE

imagery and meet safety requirements for necessary machinery

b. Demonstrates ability to read, interpret, and act upon signs, symbols, and other visual cues
c. Demonstrates ability to visually discriminate in gross and fine imagery
d. Demonstrates ability to visualize abstractly
e. Demonstrates ability to apply visual imagery to applied tasks

4. ***Knowing How to Learn:*** *Use efficient learning techniques to acquire and apply new knowledge and skills*
   a. Demonstrates mastery of basic reading, math, and language skills through application
   b. Demonstrates ability to translate abstract theory into practical application
   c. Demonstrates ability to incorporate and generalize new learning into a sequential learning process
   d. Demonstrates knowledge of good study skills and learning habits
5. ***Reasoning:*** *Discovers a rule or principle underlying the relationship between two or more objects and applies it when solving a problem*
   a. Demonstrates use of simple logic
   b. Demonstrates ability to distinguish relationships
   c. Demonstrates ability to determine and isolate factors in relationships
   d. Demonstrates and applies knowledge through practice
   e. Recognizes that attitudes, skills, and practice are essential to productivity
   f. Demonstrates ability to discriminate between positive and negative, and act accordingly

C. **Personal Qualities:** Displays responsibility, self-esteem, sociability, self-management, and integrity and honesty

1. ***Responsibility:*** *Exerts a high level of effort and perseveres towards goal attainment*
   a. Demonstrates ability to formulate realistic and useful short and long term goals and complete steps necessary to timely achieve goals
   b. Demonstrates ability to make adjustments, revisions, and changes to achieve goals in a cooperative and polite manner
   c. Demonstrates ability to focus on task at hand and work to completion

BEST COPY AVAILABLE

d. Demonstrates good work ethics through regular attendance, adequate classroom preparations, and appropriate use of classroom time
e. Demonstrates maturity to take responsibility for actions
f. Demonstrates ability to cooperatively work in individual, team, and group situations in timely and effective manner

2. ***Self-Esteem:*** *Believes in own self-worth and maintains a positive view of self*
   a. Presents a positive attitude toward tasks
   b. Demonstrates ability to separate work and personal behaviors
   c. Actively participates in learning opportunities by sharing knowledge and skills with peers and instructors
   d. Demonstrates ability to accept personal strengths and weaknesses and builds on positive behaviors
   e. Demonstrates ability to accept and use constructive criticism
   f. Accepts positive reinforcement in an appropriate manner
3. ***Sociability:*** *Demonstrates understanding, friendliness, adaptability, empathy, and politeness in group settings*
   a. Demonstrates appropriate and acceptable social behaviors in interactions
   b. Demonstrates ability to work cooperatively in individual, team, or group situations
   c. Demonstrates active interest in peers by offering assistance, sharing resources, and sharing knowledge in a professional and acceptable manner
   d. Demonstrates professional work ethic by separating work and personal social behaviors and acting accordingly
4. ***Self-Management:*** *Assesses self accurately, sets personal goals, monitors progress, and exhibits self-control*
   a. Accepts personal strengths and weaknesses and uses the same for positive advancement
   b. Demonstrates ability to continuously set, assess, choose, and modify objectives as the situation demands in an appropriate manner
   c. Demonstrates ability to formulate and follow personal schedules
   d. Demonstrates ability to wisely use classroom time
   e. Demonstrates use of good study habits and skills
   f. Demonstrates maturity to take responsibility for own actions
5. ***Integrity/Honesty:*** *Chooses ethical courses of action*

a. Knows and demonstrates ability to distinguish between positive and negative behaviors
b. Demonstrates honesty and integrity in working with peers and supervisors
c. Takes full responsibility for personal actions
d. Demonstrates understanding of consequences for negative ethical behaviors and accepts responsibility for same when applicable
e. Demonstrates positive work and social ethics in undertakings

Appropriate Reference Materials:

1. MASTER Technical Modules:
   LSR-A1 through LSR-A4;
   LSR-B1 through LSR-B3;
   LSR-B5 through LSR-B9;
   LSR-D6 through LSR-D7;
   LSR-E1 through LSR-E9;
   LSR-G1 through LSR-G2;
   LSR-G4 through LSR-G5;
   LSR-I1; and,
   LSR-I3.
2. ANSI-Z136.1, *Safe Use of Lasers*, Latest Edition
3. Laser Institute of America (LIA) *Introduction to Laser Safety and Laser Hazards* — Video Training Module, Latest Edition

LSR 594
06/040798

MASTER Curriculum
Laser Machining
(Certificate Program)

		LEC	LAB	CR
First Semester*				
LSR 584	Industrial Mathematics	3	0	3
LSR 585	Industrial Electronics & Controls	2	3	3
LSR 591	Computer-Aided Design (CAD)	2	3	3
LSR 589	Computer Numerical Control (CNC)	2	3	3
LSR 594	Modern Optics	2	3	3
		11	12	15
Second Semester*				
LSR 593	Laser Safety	1	0	1
LSR 587	Industrial Laser Systems	3	3	4
LSR 592	Computer-Aided Manufacturing (CAM)	2	3	3
LSR 586	Metrology	2	3	3
LSR 588	Laser Materials Processing	2	3	3
		10	12	14
	Program Totals	21	24	29

*** Each Semester is 15 weeks in length**

LSR 593

MASTER PROGRAM

Laser Safety

COURSE SYLLABUS

Total lecture hours: 15 **Total lab hours: 0** **Credit hours: 1**

COURSE DESCRIPTION:

This course is for students in the Laser Machining Technology program. The basic theory of laser operation is presented. With the emphasis on industrial lasers (i.e., higher–power models), various types of lasers and their different uses and applications are covered. Also, the various types of hazards encountered in the use of lasers and the present government safety regulations are discussed.

PREREQUISITES: NONE

COURSE OBJECTIVES:

After successful completion of this course, the students will be able to:

1. Know basic laser operations;
2. Know the various types of lasers with emphasis on those with industrial applications;
3. Know the various classifications of lasers;
4. Know the present government safety rules: specifically, ANSIZ136.1, regarding laser operations; and,
5. Know the various types of laser safety eyewear available.

REQUIRED COURSE MATERIALS:

Textbook: *Laser Safety Guide,* by the LIA, Latest Edition

Supplementary Materials: Instructor Handouts

METHOD OF INSTRUCTION:

Lecture: Didactic presentations will include lecture, handouts, and demonstrations.

Method of Evaluation: A student's grade will be based on multiple measures of performance. The assessment will measure development of independent critical thinking skills and will include evaluation of the student's ability to:

1. Perform the manipulative skills of the craft as required to satisfactorily complete laboratory assignments;
2. Apply theory to laboratory assignments;
3. Perform on written, oral, or practical examinations;
4. Perform on outside assignments including writing assignments;
5. Contribute to class discussions;
6. Maintain attendance per current policy; and,
7. Follow all shop rules and safety regulations as stated in the laboratory manual.

LECTURE OUTLINE:

Lecture Topics

Introduction and Theory of Laser Operation
Types of Lasers and Laser Hazards
Laser Characteristics and Classes of Lasers
Laser Safety Standards
Eye Protection and Hazard Evaluation
Laser Calculations and Measurements
ANSI Z136.1 Standards
FINAL EXAM

Total Lecture Hours 15

COURSE OBJECTIVES: SCANS COMPETENCIES

The Secretary's Commission on Achieving Necessary Skills (SCANS), U.S. Department of Labor, has identified in its "AMERICA 2000 REPORT" that all students should develop a new set of competencies and foundation skills if they are to enjoy a productive, full and satisfying life. These are in addition to the Technical Workplace Competencies required by industry. SCANS is made up of five competencies and a three-part foundation of skills and personal qualities that are needed for solid job performance. All italicized headings in this section are direct quotations from "What Work Requires of Schools: A SCANS Report for America 2000."

The following activities will be performed by each student for successful completion of this course:

I. COMPETENCIES

A. ***Resources:*** *Identifies, organizes, plans, and allocates resources*

1. Allocates time to complete assigned tasks on schedule

2. Determines and allocates required materials and resources for meeting objectives
3. Evaluates skills, performance, and quality of work and provides feedback

B. *Interpersonal: Works with others*
1. Participates as a member of the team, contributing to group effort
2. Provides individual assistance/direction to peers as requested
3. Determines and meets expectations
4. Exercises leadership qualities to effectively communicate ideas and make decisions.
5. Negotiates resources in order to accomplish objectives
6. Works well with all members of the class

C. *Information: Acquires and uses information*
1. Acquires and evaluates information
2. Organizes and maintains information
3. Interprets and communicates information

D. *Systems: Understands complex inter-relationships*
1. Understands and works well with social, organizational, and technological systems
2. Monitors and corrects performance of system during operation
3. Recommends modifications to system to improve performance

E. *Technology: Works with a variety of technologies*
1. Chooses relevant procedures, tools, and equipment
2. Applies appropriate procedures and techniques to accomplish tasks
3. Identifies or solves problems to maintain equipment

II. FOUNDATION SKILLS

A. **Basic Skills:** Reads, writes, performs arithmetic and mathematical operations, listens and speaks

1. ***Reading:*** *Locates, understands, and interprets written information in prose and in documents such as manuals, graphs, and schedules*

a. Demonstrates basic reading skills including abilities to perceive main ideas, draw appropriate conclusions, detect a sequence, locate answers, find facts, and infer from written texts

b. Demonstrates course specific reading skills including abilities to read, interpret, and comprehend information from text and supplemental materials on a level to facilitate productive independent and group study

c. Demonstrates ability to read, interpret, and utilize information from course specific instruments (i.e., charts,

diagrams, graphs, schematics, blueprints, flow charts, etc.)

d. Demonstrates ability to read, interpret, and follow schedules and procedural instructions in a timely and appropriate manner

e. Demonstrates ability to choose and use most appropriate reading method (skim, scan, or read for comprehension) for materials

2. ***Writing:*** *Communicates thoughts, ideas, information, and messages in writing; and creates documents such as letters, directions, manuals, reports, graphs, and flow charts*

a. Demonstrates basic writing skills including abilities to produce written documents which conform with accepted grammatical and communication standards required for effective daily functioning

b. Demonstrates effective written study skills including note taking, maintaining course specific journals, workbooks, manuals, etc.

c. Demonstrates technical writing skills in preparing outlines, summaries, time lines, flow charts, diagrams, etc. appropriate to materials covered

d. Demonstrates ability to complete all required writings in a timely, complete, and professional manner

e. Demonstrates competence in subject matter through the organization and presentation of answers to required written assessments

3. ***Arithmetic/Mathematics:*** *Perform basic computations and approaches practical problems by choosing appropriately from a variety of mathematical techniques*

a. Demonstrates proficiency in basic arithmetic functions including ability to add, subtract, multiply, and divide whole numbers, fractions, decimals, and percentages

b. Demonstrates ability to read, comprehend, and select appropriate math procedures to work basic math problems

c. Demonstrates ability to understand and perform multi-step computations

d. Demonstrates ability to read, interpret, and use standard measuring devices

e. Demonstrates ability to comprehend, retain, and utilize course specific measuring devices effectively

f. Demonstrates ability to understand, retain, and utilize higher mathematical formulas and functions required for course specific math performance

g. Demonstrates ability to appropriately transfer mathematical calculations and information from paper to machines

4. ***Listening:*** *Receives, attends to, interprets, and responds to verbal messages and other cues*
   a. Functions at minimal or above required hearing levels to receive, attend, interpret, and respond to verbal messages and instructions and to safely operate machinery
   b. Demonstrates ability to hear, comprehend, and appropriately follow directions
   c. Demonstrates auditory ability to hear, comprehend, and utilize verbal classroom as well as other auditory instruction
   d. Demonstrates ability to discriminate between essential and non-essential verbal information and react appropriately
   e. Demonstrates ability to focus and fine-tune listening skills to receive, interpret, and respond to various sounds
   f. Demonstrates ability and maturity to seek and receive additional individualized instruction as needed

5. ***Speaking***: *Organizes ideas and communicates orally*
   a. Demonstrates appropriate listening and speaking skills in personal conversations
   b. Demonstrates ability to choose and organize appropriate words to effectively communicate
   c. Demonstrates ability to speak clearly and distinctly with appropriate volume, tone, and body language for situation
   d. Demonstrates ability to spontaneously organize and present appropriate answers and/or short presentations for classroom and /or assessment purposes
   e. Demonstrates ability to formulate, organize, and deliver major presentations to peers or groups
   f. Demonstrates ability to speak effectively in one-on-one, small group, or large group presentations
   g. Demonstrates ability to take responsibility for presentations

B. Thinking Skills: Thinks creatively, makes decisions, solves problems, visualizes, knows how to learn and reasons

1. ***Decision Making:*** *Specifies goals and constraints, generates alternatives, considers risks, and evaluates and chooses best alternative*
   a. Demonstrates ability to objectively assess personal strengths and weaknesses

b. Demonstrates ability to set realistic short-term and long-term goals
c. Demonstrates ability to recognize and distinguish between positive and negative alternatives
d. Demonstrates ability to identify potential pitfalls and take evasive actions
e. Demonstrates ability to objectively and responsibly evaluate alternatives by testing hypotheses and selecting most appropriate response
f. Demonstrates ability to profit from negative evaluations or mistakes by reformulating, redirecting, reconstructing, or retesting alternatives
g. Demonstrates maturity in taking responsibility for decisions

2. ***Problem Solving:*** *Recognizes problems and devises and implements plan of action*
   a. Demonstrates ability to detect problem through observation, inquiry, or directive
   b. Demonstrates ability to grasp appropriate overview and degree of seriousness of problem and to behave responsibly in situation
   c. Demonstrates ability to generate alternatives or options for problem solution
   d. Demonstrates ability to research options, assess and evaluate options, and determine appropriate and best solution
   e. Demonstrates ability to initiate and effect solution
   f. Demonstrates ability to take responsibility for outcomes
   g. Demonstrates ability to effectively problem solve in individual, team, or group situations
3. ***Seeing Things In the Mind's Eye:*** *Organizes, and processes symbols, pictures, graphs, objects, and other information*
   a. Functions at minimum or above required visual levels in order to see, interpret, attend and respond to visual imagery and meet safety requirements for necessary machinery
   b. Demonstrates ability to read, interpret, and act upon signs, symbols, and other visual cues
   c. Demonstrates ability to visually discriminate in gross and fine imagery
   d. Demonstrates ability to visualize abstractly
   e. Demonstrates ability to apply visual imagery to applied tasks

4. ***Knowing How to Learn:*** *Use efficient learning techniques to acquire and apply new knowledge and skills*
   a. Demonstrates mastery of basic reading, math, and language skills through application
   b. Demonstrates ability to translate abstract theory into practical application
   c. Demonstrates ability to incorporate and generalize new learning into a sequential learning process
   d. Demonstrates knowledge of good study skills and learning habits
5. ***Reasoning:*** *Discovers a rule or principle underlying the relationship between two or more objects and applies it when solving a problem*
   a. Demonstrates use of simple logic
   b. Demonstrates ability to distinguish relationships
   c. Demonstrates ability to determine and isolate factors in relationships
   d. Demonstrates and applies knowledge through practice
   e. Recognizes that attitudes, skills, and practice are essential to productivity
   f. Demonstrates ability to discriminate between positive and negative, and act accordingly

C. **Personal Qualities:** Displays responsibility, self-esteem, sociability, self-management, and integrity and honesty
1. ***Responsibility:*** *Exerts a high level of effort and perseveres towards goal attainment*
   a. Demonstrates ability to formulate realistic and useful short and long term goals and complete steps necessary to timely achieve goals
   b. Demonstrates ability to make adjustments, revisions, and changes to achieve goals in a cooperative and polite manner
   c. Demonstrates ability to focus on task at hand and work to completion
   d. Demonstrates good work ethics through regular attendance, adequate classroom preparations, and appropriate use of classroom time
   e. Demonstrates maturity to take responsibility for actions
   f. Demonstrates ability to cooperatively work in individual, team, and group situations in timely and effective manner
2. ***Self-Esteem:*** *Believes in own self-worth and maintains a positive view of self*
   a. Presents a positive attitude toward tasks

b. Demonstrates ability to separate work and personal behaviors
c. Actively participates in learning opportunities by sharing knowledge and skills with peers and instructors
d. Demonstrates ability to accept personal strengths and weaknesses and builds on positive behaviors
e. Demonstrates ability to accept and use constructive criticism
f. Accepts positive reinforcement in an appropriate manner

3. ***Sociability:*** *Demonstrates understanding, friendliness, adaptability, empathy; and politeness in group settings*
   a. Demonstrates appropriate and acceptable social behaviors in interactions
   b. Demonstrates ability to work cooperatively in individual, team, or group situations
   c. Demonstrates active interest in peers by offering assistance, sharing resources, and sharing knowledge in a professional and acceptable manner
   d. Demonstrates professional work ethic by separating work and personal social behaviors and acting accordingly

4. ***Self-Management:*** *Assesses self accurately, sets personal goals, monitors progress, and exhibits self-control*
   a. Accepts personal strengths and weaknesses and uses the same for positive advancement
   b. Demonstrates ability to continuously set, assess, choose, and modify objectives as the situation demands in an appropriate manner
   c. Demonstrates ability to formulate and follow personal schedules
   d. Demonstrates ability to wisely use classroom time
   e. Demonstrates use of good study habits and skills
   f. Demonstrates maturity to take responsibility for own actions

5. ***Integrity/Honesty:*** *Chooses ethical courses of action*
   a. Knows and demonstrates ability to distinguish between positive and negative behaviors
   b. Demonstrates honesty and integrity in working with peers and supervisors
   c. Takes full responsibility for personal actions
   d. Demonstrates understanding of consequences for negative ethical behaviors and accepts responsibility for same when applicable
   e. Demonstrates positive work and social ethics in undertakings

Appropriate Reference Materials:

1. MASTER Technical Modules:
   LSR-A1 through LSR-A4;
   LSR-B1 through LSR-B3;
   LSR-B5 through LSR-B7;
   LSR-D1 through LSR-D5;
   LSR-D7;
   LSR-E1 through LSR-E5;
   LSR-E8 through LSR-E9;
   LSR-G1 through LSR-G6;
   LSR-I1 through LSR-I4; and,
   LSR-I6.
2. *Safe Use of Lasers,* ANSI-Z136.1, Latest Edition
3. *Introduction to Laser Safety and Laser Hazards* — Video Training Module, Laser Institute of America (LIA), Latest Edition
4. *Guide to the Selection of Laser Eye Protection* by LIA, Latest Edition
5. *Industrial Lasers and Their Applications,* Luxon and Parker, Prentice-Hall, Latest Edition

LSR 593
06/040798

LSR 587

MASTER PROGRAM

Industrial Laser Systems

COURSE SYLLABUS

Total lecture hours: 45 **Total lab hours: 45** **Credit hours: 4**

COURSE DESCRIPTION:

This course will provide the student with a basic understanding of industrial lasers, applications, and systems. Course material will include the study of spontaneous and stimulated emission, laser output characteristics and modification, materials, laser safety, laser components, survey of laser types, and industrial laser applications. Among the laser systems to be studied will be gas lasers, semiconductor lasers, solid state lasers, ion lasers, molecular and dye lasers, excimer lasers, free electron lasers, and others. Among the many different uses of lasers to be studied will be laser welding and surface treatment, material removal, laser marking and etching, non-destructive testing, distance measurement, lasers in medicine and surgery, lasers in construction, spectroscopy, communications and others. Classroom lectures will be supplemented with experimental and video demonstrations. Laboratory included.

PREREQUISITES: **Senior standing in Laser Electro-Optics Technology**

COURSE OBJECTIVES:

After successful completion of this course, the students will be able to:

1. Understand basic characteristics of light including directionality, coherence properties, polarization, and monochromaticity;
2. Understand basic laser principles;
3. Understand laser output characteristics;
4. Understand laser output modification techniques;
5. Apply proper laboratory safety procedures;
6. Understand a broad range of laser and laser systems;
7. Perform laser alignment, gauging, and inspection;
8. Understand holography and its applications;
9. Understand the interaction of high energy laser beams with various materials;
10. Understand laser welding and surface treatment; and,
11. Understand laser material removal.

REQUIRED COURSE MATERIALS:

Textbook: *Industrial Lasers and Their Applications,* Luxon/Parker, Prentice Hall, Latest Edition

Lab Manual: None

Supplementary Materials: Instructor's Notes and Handouts

Supplies: Notebook

METHOD OF INSTRUCTION:

Lecture: Didactic presentations will include lecture, handouts, and demonstrations.

Laboratory: Laboratory will be a hands–on process.

Method of Evaluation: A student's grade will be based on multiple measures of performance. The assessment will measure development of independent critical thinking skills and will include evaluation of the student's ability to:

1. Perform the manipulative skills of the craft as required to satisfactorily complete laboratory assignments;
2. Apply theory to laboratory assignments;
3. Perform on written, oral, or practical examinations;
4. Perform on outside assignments including writing assignments;
5. Contribute to class discussions;
6. Maintain attendance per current policy; and,
7. Follow all shop rules and safety regulations as stated in the laboratory manual.

LECTURE OUTLINE:

Lecture Topics

Characteristics of Light

General Description of Light Waves
Understand Monochromaticity
Understand Directionality, Coherence and Polarization

Basic Laser Principles

Optical Radiation Processes with Emphasis on the Amplification Process
Understand Optical Feedback
Discussion of Optical Selection Rules, Transition Lifetimes
Understand Einstein Relations, Gain Coefficients, Three–and–Four Level Pumping Systems, and

Threshold and Resonator Stability

Laser Output Characteristics

Discussion of the Active Medium, Population Inversion And Optical Feedback Determine the Temporal, Spatial, and Spectral Characteristics of the Device

Understand Line Broadening Mechanisms, Axial and Transverse Modes

Understand Pump Rate, Gain Saturation, and Power Output

Output Modification

Discussion on Methods Used to Modify the Spatial and Spectral Characteristics of a Variety of Laser Systems

Understand Q-Switching

Understand Electro-Optic Modulation and Acousto–Optic Modulation

Safety and Laboratory Procedures

Discussion of Proper Laboratory Practice

Live Demonstrations of Practices

A Laser Exposition

General Description of Characteristics and Component of Commercial Lasers

Understand Ruby, Nd: YAG and Other Solid State Lasers

Understand Gas, Dye, and Semiconductor Lasers

Laser Alignment, Gauging, and Inspection

Discussion of Laser Scanning Techniques

Understand Optical Alignment and Optical Triangulation

Understand the Principles of Optical Detection

General Treatment of Charge–Coupled Devices (CCD)

Holography and Applications: Non–Destructive Testing

General Discussion of Light Wave Interference

Understand the Principles of Holographic Non-Destructive Testing (HNDT)

Understand the Set–Up and Operation of Holographic Recording System

Understand the Set–Up and Operation of HNDT

Interaction of High Power Laser Beam With Materials

Understand Laser-Optics and Beam Characteristics

Discussion of Transverse Electromagnetic Modes (TEM)

Understand Spot Size and Power Density

Understand Reflectivity and Absorption of Laser Energy

Discussion of Thermal Diffusivity and Thermal Time Constants

Laser Welding and Surface Treatment

Discussion of Beam Delivery Optics

Understand the Procedure of Laser Welding

Understand Pulsed and Continuous–Wave (CW) Laser Welding
Laser Material Removal
Discussion of Laser–Supported Absorption (LSA)
Understand Laser Drilling
Understand Laser Cutting
Miscellaneous Applications
Discussion of Spectroscopy
Discussion of Spectroscopic Systems
Final Exam

Total Lecture Hours 45

LAB OUTLINE:

Lab Topics

Alignment Procedures
Divergence, Beam-Collimation, and Spatial-Filtering
Absorption and Reflection Measurements
Power and Energy Measurements
CW and Pulsed Power Supply Design and Test
Alignment and Operation of an Argon Laser System
Alignment and Operation of a CW Nd:YAG Laser System
Alignment and Operation of a CW CO_2 Laser System
Operation of a Gas Semiconductor Diode Laser
Alignment and Operation of a CW Nd:YAG Laser System

Total Lab Hours 48

COURSE OBJECTIVES: SCANS COMPETENCIES

The Secretary's Commission on Achieving Necessary Skills (SCANS), U.S. Department of Labor, has identified in its "AMERICA 2000 REPORT" that all students should develop a new set of competencies and foundation skills if they are to enjoy a productive, full and satisfying life. These are in addition to the Technical Workplace Competencies required by industry. SCANS is made up of five competencies and a three-part foundation of skills and personal qualities that are needed for solid job performance. All italicized headings in this section are direct quotations from "What Work Requires of Schools: A SCANS Report for America 2000."

The following activities will be performed by each student for successful completion of this course:

I. COMPETENCIES
   A. *Resources: Identifies, organizes, plans, and allocates resources*
      1. Allocates time to complete assigned tasks on schedule

2. Determines and allocates required materials and resources for meeting objectives
3. Evaluates skills, performance, and quality of work and provides feedback

B. ***Interpersonal:*** *Works with others*
1. Participates as a member of the team, contributing to group effort
2. Provides individual assistance/direction to peers as requested
3. Determines and meets expectations
4. Exercises leadership qualities to effectively communicate ideas and make decisions.
5. Negotiates resources in order to accomplish objectives
6. Works well with all members of the class

C. ***Information:*** *Acquires and uses information*
1. Acquires and evaluates information
2. Organizes and maintains information
3. Interprets and communicates information

D. ***Systems:*** *Understands complex inter-relationships*
1. Understands and works well with social, organizational, and technological systems
2. Monitors and corrects performance of system during operation
3. Recommends modifications to system to improve performance

E. ***Technology:*** *Works with a variety of technologies*
1. Chooses relevant procedures, tools, and equipment
2. Applies appropriate procedures and techniques to accomplish tasks
3. Identifies or solves problems to maintain equipment

II. FOUNDATION SKILLS

A. **Basic Skills:** Reads, writes, performs arithmetic and mathematical operations, listens and speaks

1. ***Reading:*** *Locates, understands, and interprets written information in prose and in documents such as manuals, graphs, and schedules*

a. Demonstrates basic reading skills including abilities to perceive main ideas, draw appropriate conclusions, detect a sequence, locate answers, find facts, and infer from written texts

b. Demonstrates course specific reading skills including abilities to read, interpret, and comprehend information from text and supplemental materials on a level to facilitate productive independent and group study

c. Demonstrates ability to read, interpret, and utilize information from course specific instruments (i.e., charts,

diagrams, graphs, schematics, blueprints, flow charts, etc.)

d. Demonstrates ability to read, interpret, and follow schedules and procedural instructions in a timely and appropriate manner

e. Demonstrates ability to choose and use most appropriate reading method (skim, scan, or read for comprehension) for materials

2. ***Writing:*** *Communicates thoughts, ideas, information, and messages in writing; and creates documents such as letters, directions, manuals, reports, graphs, and flow charts*

a. Demonstrates basic writing skills including abilities to produce written documents which conform with accepted grammatical and communication standards required for effective daily functioning

b. Demonstrates effective written study skills including note taking, maintaining course specific journals, workbooks, manuals, etc.

c. Demonstrates technical writing skills in preparing outlines, summaries, time lines, flow charts, diagrams, etc. appropriate to materials covered

d. Demonstrates ability to complete all required writings in a timely, complete, and professional manner

e. Demonstrates competence in subject matter through the organization and presentation of answers to required written assessments

3. ***Arithmetic/Mathematics:*** *Perform basic computations and approaches practical problems by choosing appropriately from a variety of mathematical techniques*

a. Demonstrates proficiency in basic arithmetic functions including ability to add, subtract, multiply, and divide whole numbers, fractions, decimals, and percentages

b. Demonstrates ability to read, comprehend, and select appropriate math procedures to work basic math problems

c. Demonstrates ability to understand and perform multi-step computations

d. Demonstrates ability to read, interpret, and use standard measuring devices

e. Demonstrates ability to comprehend, retain, and utilize course specific measuring devices effectively

f. Demonstrates ability to understand, retain, and utilize higher mathematical formulas and functions required for course specific math performance

g. Demonstrates ability to appropriately transfer mathematical calculations and information from paper to machines

4. ***Listening:*** *Receives, attends to, interprets, and responds to verbal messages and other cues*
   a. Functions at minimal or above required hearing levels to receive, attend, interpret, and respond to verbal messages and instructions and to safely operate machinery
   b. Demonstrates ability to hear, comprehend, and appropriately follow directions
   c. Demonstrates auditory ability to hear, comprehend, and utilize verbal classroom as well as other auditory instruction
   d. Demonstrates ability to discriminate between essential and non-essential verbal information and react appropriately
   e. Demonstrates ability to focus and fine-tune listening skills to receive, interpret, and respond to various sounds
   f. Demonstrates ability and maturity to seek and receive additional individualized instruction as needed

5. ***Speaking:*** *Organizes ideas and communicates orally*
   a. Demonstrates appropriate listening and speaking skills in personal conversations
   b. Demonstrates ability to choose and organize appropriate words to effectively communicate
   c. Demonstrates ability to speak clearly and distinctly with appropriate volume, tone, and body language for situation
   d. Demonstrates ability to spontaneously organize and present appropriate answers and/or short presentations for classroom and /or assessment purposes
   e. Demonstrates ability to formulate, organize, and deliver major presentations to peers or groups
   f. Demonstrates ability to speak effectively in one-on-one, small group, or large group presentations
   g. Demonstrates ability to take responsibility for presentations

B. Thinking Skills: Thinks creatively, makes decisions, solves problems, visualizes, knows how to learn and reasons

1. ***Decision Making:*** *Specifies goals and constraints, generates alternatives, considers risks, and evaluates and chooses best alternative*
   a. Demonstrates ability to objectively assess personal strengths and weaknesses

b. Demonstrates ability to set realistic short-term and long-term goals
c. Demonstrates ability to recognize and distinguish between positive and negative alternatives
d. Demonstrates ability to identify potential pitfalls and take evasive actions
e. Demonstrates ability to objectively and responsibly evaluate alternatives by testing hypotheses and selecting most appropriate response
f. Demonstrates ability to profit from negative evaluations or mistakes by reformulating, redirecting, reconstructing, or retesting alternatives
g. Demonstrates maturity in taking responsibility for decisions

2. ***Problem Solving:*** *Recognizes problems and devises and implements plan of action*
   a. Demonstrates ability to detect problem through observation, inquiry, or directive
   b. Demonstrates ability to grasp appropriate overview and degree of seriousness of problem and to behave responsibly in situation
   c. Demonstrates ability to generate alternatives or options for problem solution
   d. Demonstrates ability to research options, assess and evaluate options, and determine appropriate and best solution
   e. Demonstrates ability to initiate and effect solution
   f. Demonstrates ability to take responsibility for outcomes
   g. Demonstrates ability to effectively problem solve in individual, team, or group situations

3. ***Seeing Things In the Mind's Eye:*** *Organizes, and processes symbols, pictures, graphs, objects, and other information*
   a. Functions at minimum or above required visual levels in order to see, interpret, attend and respond to visual imagery and meet safety requirements for necessary machinery
   b. Demonstrates ability to read, interpret, and act upon signs, symbols, and other visual cues
   c. Demonstrates ability to visually discriminate in gross and fine imagery
   d. Demonstrates ability to visualize abstractly
   e. Demonstrates ability to apply visual imagery to applied tasks

4. ***Knowing How to Learn:*** *Use efficient learning techniques to acquire and apply new knowledge and skills*
   a. Demonstrates mastery of basic reading, math, and language skills through application
   b. Demonstrates ability to translate abstract theory into practical application
   c. Demonstrates ability to incorporate and generalize new learning into a sequential learning process
   d. Demonstrates knowledge of good study skills and learning habits
5. ***Reasoning:*** *Discovers a rule or principle underlying the relationship between two or more objects and applies it when solving a problem*
   a. Demonstrates use of simple logic
   b. Demonstrates ability to distinguish relationships
   c. Demonstrates ability to determine and isolate factors in relationships
   d. Demonstrates and applies knowledge through practice
   e. Recognizes that attitudes, skills, and practice are essential to productivity
   f. Demonstrates ability to discriminate between positive and negative, and act accordingly

C. **Personal Qualities:** Displays responsibility, self-esteem, sociability, self-management, and integrity and honesty
1. ***Responsibility:*** *Exerts a high level of effort and perseveres towards goal attainment*
   a. Demonstrates ability to formulate realistic and useful short and long term goals and complete steps necessary to timely achieve goals
   b. Demonstrates ability to make adjustments, revisions, and changes to achieve goals in a cooperative and polite manner
   c. Demonstrates ability to focus on task at hand and work to completion
   d. Demonstrates good work ethics through regular attendance, adequate classroom preparations, and appropriate use of classroom time
   e. Demonstrates maturity to take responsibility for actions
   f. Demonstrates ability to cooperatively work in individual, team, and group situations in timely and effective manner
2. ***Self-Esteem:*** *Believes in own self-worth and maintains a positive view of self*
   a. Presents a positive attitude toward tasks

b. Demonstrates ability to separate work and personal behaviors
c. Actively participates in learning opportunities by sharing knowledge and skills with peers and instructors
d. Demonstrates ability to accept personal strengths and weaknesses and builds on positive behaviors
e. Demonstrates ability to accept and use constructive criticism
f. Accepts positive reinforcement in an appropriate manner

3. ***Sociability:*** *Demonstrates understanding, friendliness, adaptability, empathy, and politeness in group settings*
   a. Demonstrates appropriate and acceptable social behaviors in interactions
   b. Demonstrates ability to work cooperatively in individual, team, or group situations
   c. Demonstrates active interest in peers by offering assistance, sharing resources, and sharing knowledge in a professional and acceptable manner
   d. Demonstrates professional work ethic by separating work and personal social behaviors and acting accordingly
4. ***Self-Management:*** *Assesses self accurately, sets personal goals, monitors progress, and exhibits self-control*
   a. Accepts personal strengths and weaknesses and uses the same for positive advancement
   b. Demonstrates ability to continuously set, assess, choose, and modify objectives as the situation demands in an appropriate manner
   c. Demonstrates ability to formulate and follow personal schedules
   d. Demonstrates ability to wisely use classroom time
   e. Demonstrates use of good study habits and skills
   f. Demonstrates maturity to take responsibility for own actions
5. ***Integrity/Honesty:*** *Chooses ethical courses of action*
   a. Knows and demonstrates ability to distinguish between positive and negative behaviors
   b. Demonstrates honesty and integrity in working with peers and supervisors
   c. Takes full responsibility for personal actions
   d. Demonstrates understanding of consequences for negative ethical behaviors and accepts responsibility for same when applicable
   e. Demonstrates positive work and social ethics in undertakings

Appropriate Reference Materials:

1. MASTER Technical Modules:
   LSR-A1 through LSR-A4;
   LSR-B1 through LSR-B7;
   LSR-B9;
   LSR-C9;
   LSR-D1 through LSR-D7;
   LSR-E1 through LSR-E9;
   LSR-F1 through LSR-F2;
   LSR-G1 through LSR-G6; and,
   LSR-I1 through LSR-I3.
2. *Industrial Lasers and Their Applications,* Luxon and Parker, Prentice-Hall, Latest Edition
3. *ANSI Z136.1 Safe Use of Lasers* by ANSI, Latest Edition
4. *Guide to the Selection of Laser Eye Protection* by LIA, Latest Edition

LSR 587
06/040798

LSR 592

MASTER PROGRAM

Computer-Aided Manufacturing (CAM)

COURSE SYLLABUS

Total lecture hours: 30 **Total lab hours: 45** **Credit hours: 3**

COURSE DESCRIPTION:

In a laboratory setting, CAM 1 explores machining by utilizing a graphical software package (SmartCAM®) to generate part programs for a CNC mill and laser. Following a review of manual part programming, the emphasis of the course is learning to use the CAM software to select tools, enter part geometry, and convert screen graphics into a CNC program. The student then learns how to communicate the program to the machine and manufacture the part. Intensive work is included in editing the graphics to fully utilize the software.

In addition, the student will learn the integration of Computer Aided Design (CAD) with CAM to enhance the understanding of proceeding from the design process through the manufacturing process.

PREREQUISITES: **Metal Machining I;**
CNC Programming

COURSE OBJECTIVES:

After successful completion of this course, students will be able to:

1. Understand how to create and edit part profiles using CAM software;
2. Understand how to optimize CNC technology using CAM programming;
3. Understand how to integrate CAD drawings into CAM files;
4. Understand how to create families of parts; and,
5. Understand how to manufacture parts using a CNC mill and CNC laser.

REQUIRED COURSE MATERIALS:

Textbook: *CNC Process Modeling Using SmartCAM*, Lin, Dr. S. C., et al., Scholars Int. Publishing, Latest Edition

Lab Manual: None

Supplementary Materials: Instructor Handouts

Supplies: 2 Computer Diskettes (3.5 inch, High Density)

METHOD OF INSTRUCTION:

Lecture: Didactic presentations will include lecture, handouts, and demonstrations.

Laboratory: Laboratory will be a hands–on process using the SmartCAM software.

Method of Evaluation: A student's grade will be based on multiple measures of performance. The assessment will measure development of independent critical thinking skills and will include evaluation of the student's ability to:

1. Perform the manipulative skills of the craft as required to satisfactorily complete laboratory assignments;
2. Apply theory to laboratory assignments;
3. Perform on written, oral, or practical examinations;
4. Perform on outside assignments including writing assignments;
5. Contribute to class discussions;
6. Maintain attendance per current policy; and,
7. Follow all shop rules and safety regulations as stated in the laboratory manual.

LECTURE OUTLINE:

Lecture Topics

Introduction
Review of CNC Basics
Understand the SmartCAM® Screen Layout
Understand How to Change the Screen Layout
Understand How CNC and CAM Relate

CAM Basics
Understand Job Plan Creation
Understand the File Structure in CAM
Understand the Difference Between Tools and Layers

Setting Up Cutting Tools
Understand How to Sequence Elements
Understand Tool Offset (OFFSET)
Understand Z Axis Positions (Z_LEVEL and PROF_TOP)
Understand How to Allow Clearance for Cutting Tools (CLEAR)

Creating Part Profiles
Understand How to Input Lines, Arcs, and Circles
Understand How to Trim Profiles (GROUP–TRIM and

PROFILE_TRIM)
Understand How to Clean Up Disconnected Elements to an Intersection (TRIM_EXTEND)
Understand How to Change the View of Part Profile (ZOOM, VIEW_ANGLE, etc.)

Editing Part Profiles

Understand How to Change Tool Properties (PROPERTY_CHG)
Understand How to Change Geometry Values (MODIFY)
Understand How to Arrange Elements Sequentially (CHAIN)
Understand How to Use WALL_OFFSET for Roughing Cuts

Editing Part Profiles (continued)

Understand How to Create Blend Radii
Understand How to Create Chamfers
Understand How to Split Elements in Segments
Understand How to Create Lead In and Out Moves

Advanced Editing of Part Profiles

Understand How to Move and Copy Elements
Understand How to Rotate and Rotate Copy Elements
Understand How to Create Symmetrical Elements Using Mirror

Editing Tool Paths

Understand How to Change Tool Path Direction (REV_ORDER)
Understand How to Change the Start of a Profile (PROF_START)
Understand How to Change the Order of Machining Events (SEQUENCE_MOVE)
Understand How to Arrange Elements by Tool (TOOL_SORT)

Midterm Exam

Roughing, Drilling and Counterboring

Understand How to Perform Face Roughing
Understand How to Perform Pocket Roughing
Understand How to Avoid Islands in Roughing
Understand How to Set Up Drills and Counterboring Tools
Understand the Difference Between Full Depth, Tip Depth, and Spot Diameter

Using Construction Layers in SmartCAM®

Understand the Use of Layers in Profile Construction
Understand How to Establish Snap Points Using Layers
Understand How to Trim Profiles to "Snapable"

Configurations
Using User and Machine Events
Understand How to Create Multiple Hole Patterns Using Line At Angle (LAA)
Understand How to Create Multiple Hole Patterns Using GRID
Understand How to Change the Tool Feed Rate (FEED_CHG)
Family of Parts
Understand the Importance of Macros
Understand How to Create Variables to Represent Part Geometry
Understand How to Record a Macro
Understand How to Edit and Use a Macro
CAD/CAM Integration
Understand How to Create .DXF Files in AutoCAD®
Understand the Importance of Layers in AutoCAD®
Understand How to Perform .DXF File Translation in SmartCAM®
Code Generation
Understand How a Code Generator Works
Understand the Machine File (.SMF)
Understand the Template File (.TMP)
Understand How to Modify Code Generators
Final Exam

Total Lecture Hours **30**

LAB OUTLINE:

Lab Topics

SmartCAM Basics and Simply Geometry
Creating and Editing Part Profiles
Advanced Creating and Editing Part Profiles
Roughing and Machine Events
Construction Layers
Symmetrical Parts
Multiple Hole Drilling
Families of Parts
CAD/CAM Integration
Code Generators

Total Lab Hours **45**

COURSE OBJECTIVES: SCANS COMPETENCIES

The Secretary's Commission on Achieving Necessary Skills (SCANS), U.S. Department of Labor, has identified in its "AMERICA 2000 REPORT" that all students should develop a new set of competencies and foundation skills if they are to enjoy a productive, full and satisfying life. These are in addition to the Technical Workplace Competencies required by industry. SCANS is made up of five competencies and a three-part foundation of skills and personal qualities that are needed for solid job performance. All italicized headings in this section are direct quotations from "What Work Requires of Schools: A SCANS Report for America 2000."

The following activities will be performed by each student for successful completion of this course:

I. COMPETENCIES

- *A.* ***Resources:*** *Identifies, organizes, plans, and allocates resources*
  1. Allocates time to complete assigned tasks on schedule
  2. Determines and allocates required materials and resources for meeting objectives
  3. Evaluates skills, performance, and quality of work and provides feedback
- *B.* ***Interpersonal:*** *Works with others*
  1. Participates as a member of the team, contributing to group effort
  2. Provides individual assistance/direction to peers as requested
  3. Determines and meets expectations
  4. Exercises leadership qualities to effectively communicate ideas and make decisions.
  5. Negotiates resources in order to accomplish objectives
  6. Works well with all members of the class
- *C.* ***Information:*** *Acquires and uses information*
  1. Acquires and evaluates information
  2. Organizes and maintains information
  3. Interprets and communicates information
- *D.* ***Systems:*** *Understands complex inter-relationships*
  1. Understands and works well with social, organizational, and technological systems
  2. Monitors and corrects performance of system during operation
  3. Recommends modifications to system to improve performance
- *E.* ***Technology:*** *Works with a variety of technologies*
  1. Chooses relevant procedures, tools, and equipment
  2. Applies appropriate procedures and techniques to accomplish tasks

3. Identifies or solves problems to maintain equipment

II. FOUNDATION SKILLS

A. **Basic Skills:** Reads, writes, performs arithmetic and mathematical operations, listens and speaks

1. ***Reading:*** *Locates, understands, and interprets written information in prose and in documents such as manuals, graphs, and schedules*
   a. Demonstrates basic reading skills including abilities to perceive main ideas, draw appropriate conclusions, detect a sequence, locate answers, find facts, and infer from written texts
   b. Demonstrates course specific reading skills including abilities to read, interpret, and comprehend information from text and supplemental materials on a level to facilitate productive independent and group study
   c. Demonstrates ability to read, interpret, and utilize information from course specific instruments (i.e., charts, diagrams, graphs, schematics, blueprints, flow charts, etc.)
   d. Demonstrates ability to read, interpret, and follow schedules and procedural instructions in a timely and appropriate manner
   e. Demonstrates ability to choose and use most appropriate reading method (skim, scan, or read for comprehension) for materials
2. ***Writing:*** *Communicates thoughts, ideas, information, and messages in writing; and creates documents such as letters, directions, manuals, reports, graphs, and flow charts*
   a. Demonstrates basic writing skills including abilities to produce written documents which conform with accepted grammatical and communication standards required for effective daily functioning
   b. Demonstrates effective written study skills including note taking, maintaining course specific journals, workbooks, manuals, etc.
   c. Demonstrates technical writing skills in preparing outlines, summaries, time lines, flow charts, diagrams, etc. appropriate to materials covered
   d. Demonstrates ability to complete all required writings in a timely, complete, and professional manner
   e. Demonstrates competence in subject matter through the organization and presentation of answers to required written assessments

3. ***Arithmetic/Mathematics:*** *Perform basic computations and approaches practical problems by choosing appropriately from a variety of mathematical techniques*
   a. Demonstrates proficiency in basic arithmetic functions including ability to add, subtract, multiply, and divide whole numbers, fractions, decimals, and percentages
   b. Demonstrates ability to read, comprehend, and select appropriate math procedures to work basic math problems
   c. Demonstrates ability to understand and perform multi-step computations
   d. Demonstrates ability to read, interpret, and use standard measuring devices
   e. Demonstrates ability to comprehend, retain, and utilize course specific measuring devices effectively
   f. Demonstrates ability to understand, retain, and utilize higher mathematical formulas and functions required for course specific math performance
   g. Demonstrates ability to appropriately transfer mathematical calculations and information from paper to machines
4. ***Listening:*** *Receives, attends to, interprets, and responds to verbal messages and other cues*
   a. Functions at minimal or above required hearing levels to receive, attend, interpret, and respond to verbal messages and instructions and to safely operate machinery
   b. Demonstrates ability to hear, comprehend, and appropriately follow directions
   c. Demonstrates auditory ability to hear, comprehend, and utilize verbal classroom as well as other auditory instruction
   d. Demonstrates ability to discriminate between essential and non-essential verbal information and react appropriately
   e. Demonstrates ability to focus and fine-tune listening skills to receive, interpret, and respond to various sounds
   f. Demonstrates ability and maturity to seek and receive additional individualized instruction as needed
5. ***Speaking:*** *Organizes ideas and communicates orally*
   a. Demonstrates appropriate listening and speaking skills in personal conversations
   b. Demonstrates ability to choose and organize appropriate words to effectively communicate

c. Demonstrates ability to speak clearly and distinctly with appropriate volume, tone, and body language for situation
d. Demonstrates ability to spontaneously organize and present appropriate answers and/or short presentations for classroom and /or assessment purposes
e. Demonstrates ability to formulate, organize, and deliver major presentations to peers or groups
f. Demonstrates ability to speak effectively in one-on-one, small group, or large group presentations
g. Demonstrates ability to take responsibility for presentations

B. Thinking Skills: Thinks creatively, makes decisions, solves problems, visualizes, knows how to learn and reasons

1. ***Decision Making:*** *Specifies goals and constraints, generates alternatives, considers risks, and evaluates and chooses best alternative*

a. Demonstrates ability to objectively assess personal strengths and weaknesses
b. Demonstrates ability to set realistic short-term and long-term goals
c. Demonstrates ability to recognize and distinguish between positive and negative alternatives
d. Demonstrates ability to identify potential pitfalls and take evasive actions
e. Demonstrates ability to objectively and responsibly evaluate alternatives by testing hypotheses and selecting most appropriate response
f. Demonstrates ability to profit from negative evaluations or mistakes by reformulating, redirecting, reconstructing, or retesting alternatives
g. Demonstrates maturity in taking responsibility for decisions

2. ***Problem Solving:*** *Recognizes problems and devises and implements plan of action*

a. Demonstrates ability to detect problem through observation, inquiry, or directive
b. Demonstrates ability to grasp appropriate overview and degree of seriousness of problem and to behave responsibly in situation
c. Demonstrates ability to generate alternatives or options for problem solution
d. Demonstrates ability to research options, assess and evaluate options, and determine appropriate and best solution

e. Demonstrates ability to initiate and effect solution
f. Demonstrates ability to take responsibility for outcomes
g. Demonstrates ability to effectively problem solve in individual, team, or group situations

3. ***Seeing Things In the Mind's Eye:*** *Organizes, and processes symbols, pictures, graphs, objects, and other information*
   a. Functions at minimum or above required visual levels in order to see, interpret, attend and respond to visual imagery and meet safety requirements for necessary machinery
   b. Demonstrates ability to read, interpret, and act upon signs, symbols, and other visual cues
   c. Demonstrates ability to visually discriminate in gross and fine imagery
   d. Demonstrates ability to visualize abstractly
   e. Demonstrates ability to apply visual imagery to applied tasks

4. ***Knowing How to Learn:*** *Use efficient learning techniques to acquire and apply new knowledge and skills*
   a. Demonstrates mastery of basic reading, math, and language skills through application
   b. Demonstrates ability to translate abstract theory into practical application
   c. Demonstrates ability to incorporate and generalize new learning into a sequential learning process
   d. Demonstrates knowledge of good study skills and learning habits

5. ***Reasoning:*** *Discovers a rule or principle underlying the relationship between two or more objects and applies it when solving a problem*
   a. Demonstrates use of simple logic
   b. Demonstrates ability to distinguish relationships
   c. Demonstrates ability to determine and isolate factors in relationships
   d. Demonstrates and applies knowledge through practice
   e. Recognizes that attitudes, skills, and practice are essential to productivity
   f. Demonstrates ability to discriminate between positive and negative, and act accordingly

C. **Personal Qualities:** Displays responsibility, self-esteem, sociability, self-management, and integrity and honesty

1. ***Responsibility:*** *Exerts a high level of effort and perseveres towards goal attainment*

a. Demonstrates ability to formulate realistic and useful short and long term goals and complete steps necessary to timely achieve goals
b. Demonstrates ability to make adjustments, revisions, and changes to achieve goals in a cooperative and polite manner
c. Demonstrates ability to focus on task at hand and work to completion
d. Demonstrates good work ethics through regular attendance, adequate classroom preparations, and appropriate use of classroom time
e. Demonstrates maturity to take responsibility for actions
f. Demonstrates ability to cooperatively work in individual, team, and group situations in timely and effective manner

2. ***Self-Esteem:*** *Believes in own self-worth and maintains a positive view of self*
   a. Presents a positive attitude toward tasks
   b. Demonstrates ability to separate work and personal behaviors
   c. Actively participates in learning opportunities by sharing knowledge and skills with peers and instructors
   d. Demonstrates ability to accept personal strengths and weaknesses and builds on positive behaviors
   e. Demonstrates ability to accept and use constructive criticism
   f. Accepts positive reinforcement in an appropriate manner
3. ***Sociability:*** *Demonstrates understanding, friendliness, adaptability, empathy, and politeness in group settings*
   a. Demonstrates appropriate and acceptable social behaviors in interactions
   b. Demonstrates ability to work cooperatively in individual, team, or group situations
   c. Demonstrates active interest in peers by offering assistance, sharing resources, and sharing knowledge in a professional and acceptable manner
   d. Demonstrates professional work ethic by separating work and personal social behaviors and acting accordingly
4. ***Self-Management:*** *Assesses self accurately, sets personal goals, monitors progress, and exhibits self-control*
   a. Accepts personal strengths and weaknesses and uses the same for positive advancement

b. Demonstrates ability to continuously set, assess, choose, and modify objectives as the situation demands in an appropriate manner
c. Demonstrates ability to formulate and follow personal schedules
d. Demonstrates ability to wisely use classroom time
e. Demonstrates use of good study habits and skills
f. Demonstrates maturity to take responsibility for own actions

5. ***Integrity/Honesty:*** *Chooses ethical courses of action*
   a. Knows and demonstrates ability to distinguish between positive and negative behaviors
   b. Demonstrates honesty and integrity in working with peers and supervisors
   c. Takes full responsibility for personal actions
   d. Demonstrates understanding of consequences for negative ethical behaviors and accepts responsibility for same when applicable
   e. Demonstrates positive work and social ethics in undertakings

Appropriate Reference Materials:

1. MASTER Technical Modules:
   LSR-B1 through LSR-B4;
   LSR-B6 through LSR-B7;
   LSR-B9;
   LSR-F1 through LSR-F5;
   LSR-F7 through LSR-F10;
   LSR-H1 through LSR-H9;
   LSR-I6; and,
   LSR-J1 through LSR-J13.
2. Any text on CNC programming, Latest Edition
3. *SmartCAM Advanced 3D Machining Manual*, Latest Edition

LSR 592
06/040798

LSR 586

MASTER PROGRAM

Metrology

COURSE SYLLABUS

Total lecture hours: 30 **Total lab hours: 45** **Credit hours: 3**

COURSE DESCRIPTION:

The intent of this course in metrology is to provide the class with an understanding of the importance of accurate measurement as it relates to the overall world of manufacturing. Within the fifteen week semester, we will discuss the history and language of measurement. Various measurement instruments and gages are also discussed. Also covered will be calibration, optical comparators and coordinate measuring machines (CMM). The principles of Geometric Dimensioning and Tolerancing will be discussed throughout the semester to teach the interpretation of engineering drawings per ANSI Y14.5.

PREREQUISITES: **Industrial Mathematics**

COURSE OBJECTIVES:

After successful completion of this course, the students will be able to:

1. Demonstrate an understanding of the ANSI standard;
2. Know the proper use of calipers and micrometers;
3. Know the proper use of gage blocks and pin gages;
4. Use a Coordinate Measurement Machine; and,
5. Use an optical comparator.

REQUIRED COURSE MATERIALS:

Textbook: *Fundamentals of Dimensional Metrology,* Bush, T. Albany, NY, Latest Edition

Lab Manual: NONE

Supplies: Delmar pocket calculator
Note book

METHOD OF INSTRUCTION:

Lecture: Didactic presentations will include lecture, handouts, and demonstrations.

Laboratory: Laboratory will be a hands–on inspection and measurement process.

Method of Evaluation: A student's grade will be based on multiple measures of performance. The assessment will measure development of independent critical thinking skills and will include evaluation of the student's ability to:

1. Perform the manipulative skills of the craft as required to satisfactorily complete laboratory assignments;
2. Apply theory to laboratory assignments;
3. Perform on written, oral, or practical examinations;
4. Perform on outside assignments including writing assignments;
5. Contribute to class discussions;
6. Maintain attendance per current policy; and,
7. Follow all shop rules and safety regulations as stated in the laboratory manual.

LECTURE OUTLINE:

Lecture Topics

Study Basics of Metrology

Discuss the reasons for measurements
Study the language of measurement
Determine how to convert between SI and English systems
Interpret dimensions
Study the use of tolerances
Study the requirements of ANSI Y14.5
Study the three fundamental rules of ANSI Y14.5
Interpret the definition of virtual condition

Select Instruments Used for Measurement

Use vernier calipers
Use dial calipers
Read scales
Use micrometers
Use hole and depth micrometers
Set up and use dial indicators

Study Datums and the Three Plane Concept

Discuss the use of datums
Discuss the three-plane system: Primary, Secondary, and Tertiary
Discuss the use of material condition symbols (MMC, LMC, RFS)
Discuss the use of target points to define datums

Select Gauging Tools

Use gage blocks

Use plug (pin) gages
Use a height gage
Use "Go/No Go" gages
Design and build functional gages

Use CMM for Location of Features

Access the importance of Coordinate Measurement Machines (CMM)
Set up and use a CMM
Calibrate a CMM
Set up and measure hole locations with respect to applicable datums
Set up and measure location for non-cylindrical features
Set up and measure location for multiple pattern features
Set up and measure the projected tolerance zone

Perform Measurements for Orientation Tolerances

Study and use surface plates
Use angle plates, sine plates, mandrels, and vee blocks
Set up and measure the flatness of a surface
Set up and measure perpendicularity, angularity, and parallelism tolerances

Perform Measurement by Optical Comparison

Study and use an optical comparator
Create charts from CAD systems to use as overlays
Determine the scaling principle used in optical comparison
Assess the accuracy of an optical comparator
Set up and measure the profile of a line
Set up and measure the profile of a surface

Perform Measurements for Circularity, Concentricity, Runout, and Straightness Tolerances

Set up and measure the circularity of round features
Set up and measure the runout and total runout of round features
Set up and measure the straightness of a feature
Set up and measure two features for coplanarity, concentricity, or coaxility

Investigate Advanced Metrology Topics

Discuss the purpose and applications of laser measurement
Set up and use a laser measurement device
Assess how ISO 9000 affects metrology
Study the fundamentals of Statistical Process

Control (SPC)

Total Lecture Hours 30

LAB OUTLINE:

Lab Topics
Verniers and micrometer measurement
Gage blocks and Pin gages
Functional gages: Go/No Go gages
CMM and true position
Bonus tolerances
Measurement of Perpendicularity, Parallelism, Angularity
Measurement of Circularity, Cylindricity, Runout
Surface metrology: Measurement of Flatness and Profile
Optical metrology
Measurement of profile using an optical comparator

Total Lab Hours 45

COURSE OBJECTIVES: SCANS COMPETENCIES

The Secretary's Commission on Achieving Necessary Skills (SCANS), U.S. Department of Labor, has identified in its "AMERICA 2000 REPORT" that all students should develop a new set of competencies and foundation skills if they are to enjoy a productive, full and satisfying life. These are in addition to the Technical Workplace Competencies required by industry. SCANS is made up of five competencies and a three-part foundation of skills and personal qualities that are needed for solid job performance. All italicized headings in this section are direct quotations from "What Work Requires of Schools: A SCANS Report for America 2000."

The following activities will be performed by each student for successful completion of this course:

I. COMPETENCIES

- *A.* ***Resources:*** *Identifies, organizes, plans, and allocates resources*
  1. Allocates time to complete assigned tasks on schedule
  2. Determines and allocates required materials and resources for meeting objectives
  3. Evaluates skills, performance, and quality of work and provides feedback
- *B.* ***Interpersonal:*** *Works with others*
  1. Participates as a member of the team, contributing to group effort

2. Provides individual assistance/direction to peers as requested
3. Determines and meets expectations
4. Exercises leadership qualities to effectively communicate ideas and make decisions.
5. Negotiates resources in order to accomplish objectives
6. Works well with all members of the class

C. ***Information:*** *Acquires and uses information*

1. Acquires and evaluates information
2. Organizes and maintains information
3. Interprets and communicates information

D. ***Systems:*** *Understands complex inter-relationships*

1. Understands and works well with social, organizational, and technological systems
2. Monitors and corrects performance of system during operation
3. Recommends modifications to system to improve performance

E. ***Technology:*** *Works with a variety of technologies*

1. Chooses relevant procedures, tools, and equipment
2. Applies appropriate procedures and techniques to accomplish tasks
3. Identifies or solves problems to maintain equipment

II. FOUNDATION SKILLS

A. Basic Skills: Reads, writes, performs arithmetic and mathematical operations, listens and speaks

1. Reading: *Locates, understands, and interprets written information in prose and in documents such as manuals, graphs, and schedules*

a. Demonstrates basic reading skills including abilities to perceive main ideas, draw appropriate conclusions, detect a sequence, locate answers, find facts, and infer from written texts

b. Demonstrates course specific reading skills including abilities to read, interpret, and comprehend information from text and supplemental materials on a level to facilitate productive independent and group study

c. Demonstrates ability to read, interpret, and utilize information from course specific instruments (i.e., charts, diagrams, graphs, schematics, blueprints, flow charts, etc.)

d. Demonstrates ability to read, interpret, and follow schedules and procedural instructions in a timely and appropriate manner

e. Demonstrates ability to choose and use most appropriate reading method (skim, scan, or read for comprehension) for materials

2. ***Writing:*** *Communicates thoughts, ideas, information, and messages in writing; and creates documents such as letters, directions, manuals, reports, graphs, and flow charts*
   a. Demonstrates basic writing skills including abilities to produce written documents which conform with accepted grammatical and communication standards required for effective daily functioning
   b. Demonstrates effective written study skills including note taking, maintaining course specific journals, workbooks, manuals, etc.
   c. Demonstrates technical writing skills in preparing outlines, summaries, time lines, flow charts, diagrams, etc. appropriate to materials covered
   d. Demonstrates ability to complete all required writings in a timely, complete, and professional manner
   e. Demonstrates competence in subject matter through the organization and presentation of answers to required written assessments

3. ***Arithmetic/Mathematics:*** *Perform basic computations and approaches practical problems by choosing appropriately from a variety of mathematical techniques*
   a. Demonstrates proficiency in basic arithmetic functions including ability to add, subtract, multiply, and divide whole numbers, fractions, decimals, and percentages
   b. Demonstrates ability to read, comprehend, and select appropriate math procedures to work basic math problems
   c. Demonstrates ability to understand and perform multi-step computations
   d. Demonstrates ability to read, interpret, and use standard measuring devices
   e. Demonstrates ability to comprehend, retain, and utilize course specific measuring devices effectively
   f. Demonstrates ability to understand, retain, and utilize higher mathematical formulas and functions required for course specific math performance
   g. Demonstrates ability to appropriately transfer mathematical calculations and information from paper to machines

4. ***Listening:*** *Receives, attends to, interprets, and responds to verbal messages and other cues*

a. Functions at minimal or above required hearing levels to receive, attend, interpret, and respond to verbal messages and instructions and to safely operate machinery
b. Demonstrates ability to hear, comprehend, and appropriately follow directions
c. Demonstrates auditory ability to hear, comprehend, and utilize verbal classroom as well as other auditory instruction
d. Demonstrates ability to discriminate between essential and non-essential verbal information and react appropriately
e. Demonstrates ability to focus and fine-tune listening skills to receive, interpret, and respond to various sounds
f. Demonstrates ability and maturity to seek and receive additional individualized instruction as needed

5. ***Speaking:*** *Organizes ideas and communicates orally*

a. Demonstrates appropriate listening and speaking skills in personal conversations
b. Demonstrates ability to choose and organize appropriate words to effectively communicate
c. Demonstrates ability to speak clearly and distinctly with appropriate volume, tone, and body language for situation
d. Demonstrates ability to spontaneously organize and present appropriate answers and/or short presentations for classroom and /or assessment purposes
e. Demonstrates ability to formulate, organize, and deliver major presentations to peers or groups
f. Demonstrates ability to speak effectively in one-on-one, small group, or large group presentations
g. Demonstrates ability to take responsibility for presentations

B. Thinking Skills: Thinks creatively, makes decisions, solves problems, visualizes, knows how to learn and reasons

1. ***Decision Making:*** *Specifies goals and constraints, generates alternatives, considers risks, and evaluates and chooses best alternative*

a. Demonstrates ability to objectively assess personal strengths and weaknesses
b. Demonstrates ability to set realistic short-term and long-term goals
c. Demonstrates ability to recognize and distinguish between positive and negative alternatives
d. Demonstrates ability to identify potential pitfalls and take evasive actions

e. Demonstrates ability to objectively and responsibly evaluate alternatives by testing hypotheses and selecting most appropriate response
f. Demonstrates ability to profit from negative evaluations or mistakes by reformulating, redirecting, reconstructing, or retesting alternatives
g. Demonstrates maturity in taking responsibility for decisions

2. ***Problem Solving:*** *Recognizes problems and devises and implements plan of action*
   a. Demonstrates ability to detect problem through observation, inquiry, or directive
   b. Demonstrates ability to grasp appropriate overview and degree of seriousness of problem and to behave responsibly in situation
   c. Demonstrates ability to generate alternatives or options for problem solution
   d. Demonstrates ability to research options, assess and evaluate options, and determine appropriate and best solution
   e. Demonstrates ability to initiate and effect solution
   f. Demonstrates ability to take responsibility for outcomes
   g. Demonstrates ability to effectively problem solve in individual, team, or group situations
3. ***Seeing Things In the Mind's Eye:*** *Organizes, and processes symbols, pictures, graphs, objects, and other information*
   a. Functions at minimum or above required visual levels in order to see, interpret, attend and respond to visual imagery and meet safety requirements for necessary machinery
   b. Demonstrates ability to read, interpret, and act upon signs, symbols, and other visual cues
   c. Demonstrates ability to visually discriminate in gross and fine imagery
   d. Demonstrates ability to visualize abstractly
   e. Demonstrates ability to apply visual imagery to applied tasks
4. ***Knowing How to Learn:*** *Use efficient learning techniques to acquire and apply new knowledge and skills*
   a. Demonstrates mastery of basic reading, math, and language skills through application
   b. Demonstrates ability to translate abstract theory into practical application

c. Demonstrates ability to incorporate and generalize new learning into a sequential learning process
d. Demonstrates knowledge of good study skills and learning habits

5. ***Reasoning:*** *Discovers a rule or principle underlying the relationship between two or more objects and applies it when solving a problem*
   a. Demonstrates use of simple logic
   b. Demonstrates ability to distinguish relationships
   c. Demonstrates ability to determine and isolate factors in relationships
   d. Demonstrates and applies knowledge through practice
   e. Recognizes that attitudes, skills, and practice are essential to productivity
   f. Demonstrates ability to discriminate between positive and negative, and act accordingly

C. **Personal Qualities:** Displays responsibility, self-esteem, sociability, self-management, and integrity and honesty

1. ***Responsibility:*** *Exerts a high level of effort and perseveres towards goal attainment*
   a. Demonstrates ability to formulate realistic and useful short and long term goals and complete steps necessary to timely achieve goals
   b. Demonstrates ability to make adjustments, revisions, and changes to achieve goals in a cooperative and polite manner
   c. Demonstrates ability to focus on task at hand and work to completion
   d. Demonstrates good work ethics through regular attendance, adequate classroom preparations, and appropriate use of classroom time
   e. Demonstrates maturity to take responsibility for actions
   f. Demonstrates ability to cooperatively work in individual, team, and group situations in timely and effective manner

2. ***Self-Esteem:*** *Believes in own self-worth and maintains a positive view of self*
   a. Presents a positive attitude toward tasks
   b. Demonstrates ability to separate work and personal behaviors
   c. Actively participates in learning opportunities by sharing knowledge and skills with peers and instructors
   d. Demonstrates ability to accept personal strengths and weaknesses and builds on positive behaviors

e. Demonstrates ability to accept and use constructive criticism
f. Accepts positive reinforcement in an appropriate manner

3. ***Sociability:*** *Demonstrates understanding, friendliness, adaptability, empathy, and politeness in group settings*
   a. Demonstrates appropriate and acceptable social behaviors in interactions
   b. Demonstrates ability to work cooperatively in individual, team, or group situations
   c. Demonstrates active interest in peers by offering assistance, sharing resources, and sharing knowledge in a professional and acceptable manner
   d. Demonstrates professional work ethic by separating work and personal social behaviors and acting accordingly

4. ***Self-Management:*** *Assesses self accurately, sets personal goals, monitors progress, and exhibits self-control*
   a. Accepts personal strengths and weaknesses and uses the same for positive advancement
   b. Demonstrates ability to continuously set, assess, choose, and modify objectives as the situation demands in an appropriate manner
   c. Demonstrates ability to formulate and follow personal schedules
   d. Demonstrates ability to wisely use classroom time
   e. Demonstrates use of good study habits and skills
   f. Demonstrates maturity to take responsibility for own actions

5. ***Integrity/Honesty:*** *Chooses ethical courses of action*
   a. Knows and demonstrates ability to distinguish between positive and negative behaviors
   b. Demonstrates honesty and integrity in working with peers and supervisors
   c. Takes full responsibility for personal actions
   d. Demonstrates understanding of consequences for negative ethical behaviors and accepts responsibility for same when applicable
   e. Demonstrates positive work and social ethics in undertakings

Appropriate Reference Materials:

1. MASTER Technical Modules:
   LSR-B1 through LSR-B7;
   LSR-B9;

LSR-C1 through LSR-C9;
LSR-H10 through LSR-H13; and
LSR-J12.

2. CMM Reference Manual, Latest Edition
3. Individual inspection equipment Reference Manuals, Latest Editions
4. ANSI Y14.5 - Latest Edition

LSR 586
06/040798

LSR 588

MASTER PROGRAM

Laser Materials Processing

COURSE SYLLABUS

Total lecture hours: 32 **Total lab hours: 48** **Credit hours: 3**

COURSE DESCRIPTION:

The Materials Processing section of the course first provides a basis for comparison between traditional methods and non-traditional methods of machining. By next studying the fundamentals of laser heating, the student is led into the world of laser-material (metals, plastics, ceramics, and composites) interactions, with all of the variables which affect this process. This provides a basis for lasers studied as machine tools and the attendant machine operations, including safety. Demonstration laboratories will be provided after each new concept discussed in class. Video demonstrations will be shown for more elaborate scenarios.

PREREQUISITES:

Algebra;
Trigonometry;
A basic knowledge of standard machining operations;
Basic laser theory and systems

COURSE OBJECTIVES:

After successful completion of this course, the students will be able to:

1. Understand the basics of materials science;
2 Understand the basics of laser interactions with materials;
3. Understand the basic mathematics for estimating processes prior to performing operations;
4. Differentiate the actions of various lasers at different wave lengths on a wide variety of materials; and,
5. Perform simple machining operations on at least four different classes of materials.

REQUIRED COURSE MATERIALS:

Textbook: *Practical Laser Safety,* D. C. Winburn, Marcel Dekker, Inc., Latest Edition

Lab Manual: NONE

Supplementary Materials: Instructor Handouts

METHOD OF INSTRUCTION:

Lecture: Didactic presentations will include lecture, videos, handouts, and demonstrations.

Laboratory: Laboratory will be a hands–on process.

Method of Evaluation: A student's grade will be based on multiple measures of performance. The assessment will measure development of independent critical thinking skills and will include evaluation of the student's ability to:

1. Perform the manipulative skills of the craft as required to satisfactorily complete laboratory assignments;
2. Apply theory to laboratory assignments;
3. Perform on written, oral, or practical examinations;
4. Perform on outside assignments including writing assignments;
5. Contribute to class discussions;
6. Maintain attendance per current policy; and,
7. Follow all shop rules and safety regulations as stated in the laboratory manual.

LECTURE OUTLINE:

Lecture Topics

Traditional Mechanical Machining

Non-Traditional Methods of Machining

Mechanical
- Abrasive Flow Machining
- Microabrasive Blasting
- Ultrasonic Machining

Electrical
- Electrochemical Machining
- Electrochemical Grinding

Chemical
- Photochemical Machining
- Photochemical Polishing

Thermal
- Electron Beam Machining
- Electrodischarge Machining
- Wire Electrodischarge Machining
- Laser Beam Machining

Basics of Laser Heating

Properties of Materials

- Optical
  - Transmission
  - Absorption
  - Reflection
  - Scattering
- Mechanical
  - Hardness
  - Tribology
  - Strength
  - Heat Treatments
- Chemical
  - Composition
  - Decomposition
  - Corrodibility
- Electrical
  - Metallic
  - Dielectric
    - Ceramic
    - Polymer
    - Glass
- Thermal
  - Heat Capacity
  - Thermal Conductivity
  - Thermal Expansion Coefficient
  - Phase Changes

Laboratory

Effects of Laser Irradiation on Materials

Melting
Vaporization
Ablation
Dehydration
Removal Method
Mechanism of Reaction
Laboratory

Lasers as Machine Tools

C.W. vs. Pulsed
Energy Balance
Factors Affecting Removal Rate
Beam Direction and Deflection
Tip Design
Focused vs. Non–Focused
Wave Length/Power of Laser
Laboratory

Machine Operations

Drilling

Cutting
Surface Modification
Embossing
Marking
Texturing
Hardening
Annealing
Welding
Laboratory
Hazards and Safety
Skin
Eye
Electrical Shocks
Fire Threats
Toxic Fume Production
Unprotected Wiring and Tubing
Water Spills
Warning Signs
Safety Glasses
Interlocks
ANSI Z–136 and Maximum Permissible Exposure
Saving Sight by Managing Light
Summary
What Has Been Learned? ... Let's Do It!

Total Lecture Hours 30

LAB OUTLINE:

Lab Topics

Material Cutting with CO_2 and Nd:YAG Lasers
Seam Welding using CO_2 and Nd:YAG Lasers
Spot Welding using CO_2 and Nd:YAG Lasers
Surface Hardening using CO_2 and Nd:YAG Lasers
Material Scribing with CO_2 and Nd:YAG Lasers
Laser Marking & Etching

Total Lab Hours 45

COURSE OBJECTIVES: SCANS COMPETENCIES

The Secretary's Commission on Achieving Necessary Skills (SCANS), U.S. Department of Labor, has identified in its "AMERICA 2000 REPORT" that all students should develop a new set of competencies and foundation skills if they are to enjoy a productive, full and satisfying life. These are in addition to the Technical Workplace Competencies required by industry. SCANS is made up of five competencies and a three-part foundation of skills and personal qualities that are needed for solid job performance.

All italicized headings in this section are direct quotations from "What Work Requires of Schools: A SCANS Report for America 2000."

The following activities will be performed by each student for successful completion of this course:

I. COMPETENCIES

- **A.** ***Resources:*** *Identifies, organizes, plans, and allocates resources*
  1. Allocates time to complete assigned tasks on schedule
  2. Determines and allocates required materials and resources for meeting objectives
  3. Evaluates skills, performance, and quality of work and provides feedback
- **B.** ***Interpersonal:*** *Works with others*
  1. Participates as a member of the team, contributing to group effort
  2. Provides individual assistance/direction to peers as requested
  3. Determines and meets expectations
  4. Exercises leadership qualities to effectively communicate ideas and make decisions.
  5. Negotiates resources in order to accomplish objectives
  6. Works well with all members of the class
- **C.** ***Information:*** *Acquires and uses information*
  1. Acquires and evaluates information
  2. Organizes and maintains information
  3. Interprets and communicates information
- **D.** ***Systems:*** *Understands complex inter-relationships*
  1. Understands and works well with social, organizational, and technological systems
  2. Monitors and corrects performance of system during operation
  3. Recommends modifications to system to improve performance
- **E.** ***Technology:*** *Works with a variety of technologies*
  1. Chooses relevant procedures, tools, and equipment
  2. Applies appropriate procedures and techniques to accomplish tasks
  3. Identifies or solves problems to maintain equipment

II. FOUNDATION SKILLS

- **A.** **Basic Skills:** Reads, writes, performs arithmetic and mathematical operations, listens and speaks
  - *1.* ***Reading:*** *Locates, understands, and interprets written information in prose and in documents such as manuals, graphs, and schedules*

a. Demonstrates basic reading skills including abilities to perceive main ideas, draw appropriate conclusions, detect a sequence, locate answers, find facts, and infer from written texts
b. Demonstrates course specific reading skills including abilities to read, interpret, and comprehend information from text and supplemental materials on a level to facilitate productive independent and group study
c. Demonstrates ability to read, interpret, and utilize information from course specific instruments (i.e., charts, diagrams, graphs, schematics, blueprints, flow charts, etc.)
d. Demonstrates ability to read, interpret, and follow schedules and procedural instructions in a timely and appropriate manner
e. Demonstrates ability to choose and use most appropriate reading method (skim, scan, or read for comprehension) for materials

2. ***Writing:*** *Communicates thoughts, ideas, information, and messages in writing; and creates documents such as letters, directions, manuals, reports, graphs, and flow charts*
a. Demonstrates basic writing skills including abilities to produce written documents which conform with accepted grammatical and communication standards required for effective daily functioning
b. Demonstrates effective written study skills including note taking, maintaining course specific journals, workbooks, manuals, etc.
c. Demonstrates technical writing skills in preparing outlines, summaries, time lines, flow charts, diagrams, etc. appropriate to materials covered
d. Demonstrates ability to complete all required writings in a timely, complete, and professional manner
e. Demonstrates competence in subject matter through the organization and presentation of answers to required written assessments

3. ***Arithmetic/Mathematics:*** *Perform basic computations and approaches practical problems by choosing appropriately from a variety of mathematical techniques*
a. Demonstrates proficiency in basic arithmetic functions including ability to add, subtract, multiply, and divide whole numbers, fractions, decimals, and percentages

b. Demonstrates ability to read, comprehend, and select appropriate math procedures to work basic math problems
c. Demonstrates ability to understand and perform multi-step computations
d. Demonstrates ability to read, interpret, and use standard measuring devices
e. Demonstrates ability to comprehend, retain, and utilize course specific measuring devices effectively
f. Demonstrates ability to understand, retain, and utilize higher mathematical formulas and functions required for course specific math performance
g. Demonstrates ability to appropriately transfer mathematical calculations and information from paper to machines

4. ***Listening:*** *Receives, attends to, interprets, and responds to verbal messages and other cues*
   a. Functions at minimal or above required hearing levels to receive, attend, interpret, and respond to verbal messages and instructions and to safely operate machinery
   b. Demonstrates ability to hear, comprehend, and appropriately follow directions
   c. Demonstrates auditory ability to hear, comprehend, and utilize verbal classroom as well as other auditory instruction
   d. Demonstrates ability to discriminate between essential and non-essential verbal information and react appropriately
   e. Demonstrates ability to focus and fine-tune listening skills to receive, interpret, and respond to various sounds
   f. Demonstrates ability and maturity to seek and receive additional individualized instruction as needed
5. ***Speaking:*** *Organizes ideas and communicates orally*
   a. Demonstrates appropriate listening and speaking skills in personal conversations
   b. Demonstrates ability to choose and organize appropriate words to effectively communicate
   c. Demonstrates ability to speak clearly and distinctly with appropriate volume, tone, and body language for situation
   d. Demonstrates ability to spontaneously organize and present appropriate answers and/or short presentations for classroom and /or assessment purposes
   e. Demonstrates ability to formulate, organize, and deliver major presentations to peers or groups

f. Demonstrates ability to speak effectively in one-on-one, small group, or large group presentations
g. Demonstrates ability to take responsibility for presentations

B. **Thinking Skills:** Thinks creatively, makes decisions, solves problems, visualizes, knows how to learn and reasons

1. ***Decision Making:*** *Specifies goals and constraints, generates alternatives, considers risks, and evaluates and chooses best alternative*
   a. Demonstrates ability to objectively assess personal strengths and weaknesses
   b. Demonstrates ability to set realistic short-term and long-term goals
   c. Demonstrates ability to recognize and distinguish between positive and negative alternatives
   d. Demonstrates ability to identify potential pitfalls and take evasive actions
   e. Demonstrates ability to objectively and responsibly evaluate alternatives by testing hypotheses and selecting most appropriate response
   f. Demonstrates ability to profit from negative evaluations or mistakes by reformulating, redirecting, reconstructing, or retesting alternatives
   g. Demonstrates maturity in taking responsibility for decisions
2. ***Problem Solving:*** *Recognizes problems and devises and implements plan of action*
   a. Demonstrates ability to detect problem through observation, inquiry, or directive
   b. Demonstrates ability to grasp appropriate overview and degree of seriousness of problem and to behave responsibly in situation
   c. Demonstrates ability to generate alternatives or options for problem solution
   d. Demonstrates ability to research options, assess and evaluate options, and determine appropriate and best solution
   e. Demonstrates ability to initiate and effect solution
   f. Demonstrates ability to take responsibility for outcomes
   g. Demonstrates ability to effectively problem solve in individual, team, or group situations
3. ***Seeing Things In the Mind's Eye:*** *Organizes, and processes symbols, pictures, graphs, objects, and other information*

a. Functions at minimum or above required visual levels in order to see, interpret, attend and respond to visual imagery and meet safety requirements for necessary machinery
b. Demonstrates ability to read, interpret, and act upon signs, symbols, and other visual cues
c. Demonstrates ability to visually discriminate in gross and fine imagery
d. Demonstrates ability to visualize abstractly
e. Demonstrates ability to apply visual imagery to applied tasks

4. ***Knowing How to Learn:*** *Use efficient learning techniques to acquire and apply new knowledge and skills*
   a. Demonstrates mastery of basic reading, math, and language skills through application
   b. Demonstrates ability to translate abstract theory into practical application
   c. Demonstrates ability to incorporate and generalize new learning into a sequential learning process
   d. Demonstrates knowledge of good study skills and learning habits
5. ***Reasoning:*** *Discovers a rule or principle underlying the relationship between two or more objects and applies it when solving a problem*
   a. Demonstrates use of simple logic
   b. Demonstrates ability to distinguish relationships
   c. Demonstrates ability to determine and isolate factors in relationships
   d. Demonstrates and applies knowledge through practice
   e. Recognizes that attitudes, skills, and practice are essential to productivity
   f. Demonstrates ability to discriminate between positive and negative, and act accordingly

C. **Personal Qualities:** Displays responsibility, self-esteem, sociability, self-management, and integrity and honesty
1. ***Responsibility:*** *Exerts a high level of effort and perseveres towards goal attainment*
   a. Demonstrates ability to formulate realistic and useful short and long term goals and complete steps necessary to timely achieve goals
   b. Demonstrates ability to make adjustments, revisions, and changes to achieve goals in a cooperative and polite manner

c. Demonstrates ability to focus on task at hand and work to completion
d. Demonstrates good work ethics through regular attendance, adequate classroom preparations, and appropriate use of classroom time
e. Demonstrates maturity to take responsibility for actions
f. Demonstrates ability to cooperatively work in individual, team, and group situations in timely and effective manner

2. ***Self-Esteem:*** *Believes in own self-worth and maintains a positive view of self*
   a. Presents a positive attitude toward tasks
   b. Demonstrates ability to separate work and personal behaviors
   c. Actively participates in learning opportunities by sharing knowledge and skills with peers and instructors
   d. Demonstrates ability to accept personal strengths and weaknesses and builds on positive behaviors
   e. Demonstrates ability to accept and use constructive criticism
   f. Accepts positive reinforcement in an appropriate manner
3. ***Sociability:*** *Demonstrates understanding, friendliness, adaptability, empathy, and politeness in group settings*
   a. Demonstrates appropriate and acceptable social behaviors in interactions
   b. Demonstrates ability to work cooperatively in individual, team, or group situations
   c. Demonstrates active interest in peers by offering assistance, sharing resources, and sharing knowledge in a professional and acceptable manner
   d. Demonstrates professional work ethic by separating work and personal social behaviors and acting accordingly
4. ***Self-Management:*** *Assesses self accurately, sets personal goals, monitors progress, and exhibits self-control*
   a. Accepts personal strengths and weaknesses and uses the same for positive advancement
   b. Demonstrates ability to continuously set, assess, choose, and modify objectives as the situation demands in an appropriate manner
   c. Demonstrates ability to formulate and follow personal schedules
   d. Demonstrates ability to wisely use classroom time
   e. Demonstrates use of good study habits and skills

f. Demonstrates maturity to take responsibility for own actions

5. ***Integrity/Honesty:*** *Chooses ethical courses of action*
   a. Knows and demonstrates ability to distinguish between positive and negative behaviors
   b. Demonstrates honesty and integrity in working with peers and supervisors
   c. Takes full responsibility for personal actions
   d. Demonstrates understanding of consequences for negative ethical behaviors and accepts responsibility for same when applicable
   e. Demonstrates positive work and social ethics in undertakings

Appropriate Reference Materials:

1. MASTER Technical Modules:
   LSR-A1 through LSR-A4;
   LSR-B1 through LSR-B3;
   LSR-B5 through LSR-B9;
   LSR-C7 through LSR-C8;
   LSR-D1 through LSR-D2;
   LSR-D7;
   LSR-E1 through LSR-E9;
   LSR-F1 through LSR-F10;
   LSR-G1 through LSR-G6;
   LSR-H1 through LSR-H10;
   LSR-H12;
   LSR-I1 through LSR-I6;
   LSR-J1 through LSR-J8; and,
   LSR-J12 through LSR-J13.
2. *Industrial Lasers and Their Applications,* Luxon and Parker, Prentice-Hall, Latest Edition
3. *ANSI Z136.1 Safe Use of Lasers* by ANSI, Latest Edition
4. *Guide to the Selection of Laser Eye Protection* by LIA, Latest Edition

MASTER

a consortium of educators and industry

EDUCATIONAL RESOURCES FOR THE MACHINE TOOL INDUSTRY

Laser Machining Series

INSTRUCTOR'S HANDBOOK

DUTIES A THROUGH E

Supported by the National Science Foundation's Advanced Technological Education Program

MACHINE TOOL ADVANCED SKILLS TECHNOLOGY EDUCATIONAL RESOURCES

MASTER

a consortium of educators and industry

EDUCATIONAL RESOURCES FOR THE MACHINE TOOL INDUSTRY

Laser Machining Series

INSTRUCTOR'S HANDBOOK

Supported by the National Science Foundation's Advanced Technological Education Program

This material is based upon work supported by the
National Science Foundation under Grant No. DUE-9553716

National Science Foundation
Advanced Technological
Education Program

"Any opinions, findings, and conclusions or recommendations expressed in this material are those of the author(s) and do not necessarily reflect the views of the Foundation."

ACKNOWLEDGEMENTS

This project was made possible by the cooperation and direct support of the following organizations:

National Science Foundation - Division of Undergraduate Education
MASTER Consortia of Employers and Educators

MASTER has built upon the foundation which was laid by the Machine Tool Advanced Skills Technology (MAST) Program. The MAST Program was supported by the U.S. Department of Education - Office of Vocational and Adult Education. Without this prior support MASTER could not have reached the level of quality and quantity that is contained in these project deliverables.

MASTER DEVELOPMENT CENTERS
Augusta Technical Institute - Central Florida Community College - Itawamba Community College - Moraine Valley Community College - San Diego City College (CACT) - Springfield Technical Community College - Texas State Technical College

INDUSTRIES
AB Lasers - AIRCAP/MTD - ALCOA - American Saw - AMOCO Performance Products - Automatic Switch Company - Bell Helicopter - Bowen Tool - Brunner - Chrysler Corp. - Chrysler Technologies - Conveyor Plus - Darr Caterpillar - Davis Technologies - Delta International - Devon - D. J. Plastics - Eaton Leonard - EBTEC - Electro-Motive - Emergency One - Eureka - Foster Mold - GeoDiamond/Smith International - Greenfield Industries - Hunter Douglas - Industrial Laser - ITT Engineered Valve - Kaiser Aluminum - Krueger International. - Laser Fare - Laser Services - Lockheed Martin - McDonnell Douglas - Mercury Tool - NASSCO - NutraSweet - Rapistan DEMAG - Reed Tool - ROHR, International - Searle - Solar Turbine - Southwest Fabricators - Smith & Wesson - Standard Refrigeration - Super Sagless - Taylor Guitars - Tecumseh - Teledyne Ryan - Thermal Ceramics - Thomas Lighting - FMC, United Defense - United Technologies Hamilton Standard

COLLEGE AFFILIATES
Aiken Technical College - Bevil Center for Advanced Manufacturing Technology - Chicago Manufacturing Technology Extension Center - Great Lakes Manufacturing Technology Center - Indiana Vocational Technical College - Milwaukee Area Technical College - Okaloosa-Walton Community College - Piedmont Technical College - Pueblo Community College - Salt Lake Community College - Spokane Community College - Texas State Technical Colleges at Harlington, Marshall, Sweetwater

FEDERAL LABS
Jet Propulsion Lab - Lawrence Livermore National Laboratory - L.B.J. Space Center (NASA) - Los Alamos Laboratory - Oak Ridge National Laboratory - Sandia National Laboratory - Several National Institute of Standards and Technology Centers (NIST) - Tank Automotive Research and Development Center (TARDEC) - Wright Laboratories

SECONDARY SCHOOLS
Aiken Career Center - Chicopee Comprehensive High School - Community High School (Moraine, IL) - Connally ISD - Consolidated High School - Evans High - Greenwood Vocational School - Hoover Sr. High - Killeen ISD - LaVega ISD - Lincoln Sr. High - Marlin ISD - Midway ISD - Moraine Area Career Center - Morse Sr. High - Point Lamar Sr. High -

Pontotoc Ridge Area Vocational Center - Putnam Vocational High School - San Diego Sr. High - Tupelo-Lee Vocational Center - Waco ISD - Westfield Vocational High School

ASSOCIATIONS

American Vocational Association (AVA) - Center for Occupational Research and Development (CORD) - CIM in Higher Education (CIMHE) - Heart of Texas Tech-Prep - Midwest (Michigan) Manufacturing Technology Center (MMTC) - National Coalition For Advanced Manufacturing (NACFAM) - National Coalition of Advanced Technology Centers (NCATC) - National Skills Standards Pilot Programs - National Tooling and Machining Association (NTMA) - New York Manufacturing Extension Partnership (NYMEP) - Precision Metalforming Association (PMA) - Society of Manufacturing Engineers (SME) - Southeast Manufacturing Technology Center (SMTC)

MASTER PROJECT EVALUATORS

Dr. James Hales, East Tennessee State University and William Ruxton, formerly with the National Tooling and Machine Association (NTMA)

NATIONAL ADVISORY COUNCIL MEMBERS

The National Advisory Council has provided input and guidance into the project since the beginning. Without their contributions, MASTER could not have been nearly as successful as it has been. Much appreciation and thanks go to each of the members of this committee from the project team.
Dr. Hugh Rogers-Dean of Technology-Central Florida Community College
Dr. Don Clark-Professor Emeritus-Texas A&M University
Dr. Don Edwards-Department of Management-Baylor University
Dr. Jon Botsford-Vice President for Technology-Pueblo Community College
Mr. Robert Swanson-Administrator of Human Resources-Bell Helicopter, TEXTRON
Mr. Jack Peck-Vice President of Manufacturing-Mercury Tool & Die
Mr. Don Hancock-Superintendent-Connally ISD

SPECIAL RECOGNITION

Dr. Hugh Rogers recognized the need for this project, developed the baseline concepts and methodology, and pulled together industrial and academic partners from across the nation into a solid consortium. Special thanks and singular congratulations go to Dr. Rogers for his extraordinary efforts in this endeavor.

Dr. Don Pierson served as the Principal Investigator for the first two years of MASTER. His input and guidance of the project during the formative years was of tremendous value to the project team. Special thanks and best wishes go to Dr. Pierson during his retirement and all his worldly travels.

All findings and deliverables resulting from MASTER are primarily based upon information provided by the above companies, schools and labs. We sincerely thank key personnel within these organizations for their commitment and dedication to this project. Including the national survey, more than 2,800 other companies and organizations participated in this project. We commend their efforts in our combined attempt to reach some common ground in precision manufacturing skills standards and curriculum development.

MASTER DEVELOPMENT CENTER, SPRINGFIELD, MA
Center for Business and Technology
Springfield Technical Community College

Dr. Andrew M. Scibelli, President
Springfield Technical Community College

Dr. Thomas E. Holland, Vice President
Center for Business and Technology

One Armory Square
Springfield, MA 01105
College phone: 413/781-7822, fax: 413/781-5805
Center phone: 413/781-1314, fax:413/739-5066
e-mail: tholland@stccadmin.stcc.mass.edu

Manufacturing in New England

According to a 1994 survey from the U.S. Bureau of Labor Statistics, approximately 17% of the employment in New England is manufacturing-related, 32% is service industry, 22% is trade industry, and 29% are other industries. Recent studies show that there are four major areas of emerging growth in technical employment: (1) telecommuncations, (2) biotechnology, (3) environmental technology, and (4) advanced manufacturing technology. Telecommunications, environmental technology and biotechnology are among the top four new growth industries of the region, now constituting a total of more than 205,000 new jobs (NEBHE, 1994). While manufacturing -- long a primary sector of the New England economy -- has declined in the post-cold war era, it still comprises roughly 20% of the employment base of the six-state region. The nature of manufacturing in New England, however, is changing in terms of the technologies of design and production, the materials used, and the products developed. The application of *photonics*, which includes laser machining, is a key emerging technology inherent in all four of the above industries.

Springfield Technical Community College and the Center for Business and Technology

Springfield Technical Community College (STCC) is a public post-secondary institution located within an hour's drive to over 750 metal-machining, optics and photonics manufacturing firms in Massachusetts and Connecticut. The only technical college among the fifteen community colleges in the Commonwealth of Massachusetts, the College is situated between two large urban, disadvantaged communities and serves a highly diverse student body: over 26% of its students are minority, 52% are female, and the average age of all STCC students is twenty-seven. STCC's Advanced Technology Center (ATC) has close to $8 million in technical facilities and equipment in the areas of laser-electro optics, electronics, mechanical technologies (CAD, CNC, CAM), computer-integrated manufacturing (CIM), environmental technology, and the most current computer hardware and software to support manufacturing-related training. STCC also employs a cadre of faculty experts in these technologies who enable the ATC to conduct industry assessments, technical consulting, and industry-specific contract training for the more than 300 small- and medium-sized companies throughout western Massachusetts and Connecticut. The majority of client companies are primary suppliers to the hundreds of defense contractors in New England, including such major firms as United Technologies, Pratt & Whitney, General Electric, Raytheon, and Lockheed-Martin.

Development Team

- **Project Director:** Thomas E. Holland, Ph.D., Vice President of the STCC Center for Business and Technology, served as overall director for the MASTER project.
- **Co-Project Directors**: Gary J. Masciadrelli, MSME, Department Chairman of the STCC Mechanical Engineering Technology Department, and Nicholas M. Massa, MSEE, Program Coordinator for the Laser Electro-Optics Technology program, shared programmatic responsibility for conducting industry assessment, designing curricula, administering the pilot program, and developing skill standards and course/program materials for the Laser Machining component of the MASTER project.

Introduction:
INSTRUCTOR'S HANDBOOK

Prior to the development of this Instructor's Handbook, MASTER project staff visited over 150 companies, conducted interviews with over 500 expert workers, and analyzed data from a national survey involving over 2800 participating companies. These investigations led to the development of a series of Instructor Handbooks, with each being fully industry-driven and specific to one of the technologies shown below.

Advanced CNC and CAM
Automated Equipment Repair
Computer Aided Design & Drafting
Conventional Machining
Industrial Maintenance
Instrumentation
LASER Machining
Manufacturing Technology
Mold Making
Tool And Die
Welding

Each Instructor's Handbook contains a collection of Technical Training Modules which are built around a Competency Profile for the specific occupation. **The Competency Profile which is the basis for this Instructor's Handbook, may be found on the following page (and on each of the tab pages of this book).**

Each Technical Training Module has been designed to be:

* Based on skill standards specified by industry. There must be a direct correlation between what industry needs and what is taught in the classroom and in the laboratory. For many years this type of training has been known as "competency-based training".

* Generic in nature. The training materials may then be customized by the trainer, for any given training situation based on the training need.

* Modular in design, to allow trainers to select lessons which are applicable to their training needs.

* Comprehensive, include training for advanced and emerging, highly-specialized manufacturing technologies.

* Self-contained, including all the components which might be needed by an experienced trainer. These components might include any or all of the following:
  - a standardized lesson plan,
  - an assessment instrument,
  - a listing of commercially available resources (e.g. recommended textbooks, instructor guides, student manuals, and videos),
  - new training materials, when suitable existing materials are not available (e.g., classroom handouts, transparency masters, and laboratory exercises).

This Instructor's Handbook is arranged by Duty groupings (Duty A, Duty B, etc.) with technical modules developed for each Task Box on the Competency Profile. Trainers are free to choose modules for a specific training need and combine modules to build individualized training programs.

This Instructor's Handbook is being offered with an accompanying Student Laboratory Manual for use by the students enrolled in the training program.

Laser Machinist .... apply the principles of electronics, lasers, optics, materials, engineering documentation, CAD/CAM, and systems integration to manufacture products following current industry and company standards.

Duties	Tasks												
A Practice Laser Safety	A-1 Discuss laser safety standards	A-2 Discuss basic laser principles	A-3 Discuss laser hazards	A-4 Discuss control measures									
B Apply Mathematical Concepts	B-1 Perform basic mathematical functions	B-2 Perform algebraic functions	B-3 Study exponents and right triangle geometry	B-4 Study elements of plane and solid geometry	B-5 Perform data evaluation and statistical analysis	B-6 Perform proportioning and interpolation	B-7 Perform basic trigonometric calculations	B-8 Investigate vectors and vector systems	B-9 Investigate the Cartesian Coordiante System				
C Perform Measurement and Inspection	C-1 Study basics of metrology	C-2 Select instruments used for measurement	C-3 Study datums and the three plane concept	C-4 Select gauging tools	C-5 Use CMM for location of features	C-6 Perform measurements for orientation tolerances	C-7 Perform measurment by optical comparison	C-8 Perform measurements for circularity, concentricity, runout, and straightness tolerances	C-9 Investigate advanced metrology topics				
D Troubleshoot Industrial Electronics and Control	D-1 Perform DC voltage, current, and power measurements	D-2 Perform AC voltage, current, and power measurements	D-3 Investigate digital logic systems	D-4 Investigate diode applications	D-5 Investigate transistors and thyristors	D-6 Investigate operational amplifiers	D-7 Investigate power supply circuits						
E Apply Concepts of Modern Optics	E-1 Study reflection and refraction at plane surfaces	E-2 Perform imaging with a single lens	E-3 Perform imaging with multiple lenses	E-4 Study F-stops and apertures	E-5 Use laser beam-expanding collimators	E-6 Study interference	E-7 Study diffraction	E-8 Study polarization	E-9 Investigate radiometry and photometry				
F Perform CNC Machining	F-1 Apply machine specific nomenclature and terminology	F-2 Investigate the Cartesian coordinate system as applied to a CNC mill or laser	F-3 Apply CNC programming language	F-4 Perform start up, tool changing, and ending of programs	F-5 Perform positioning and basic drilling	F-6 Create a sub-program	F-7 Perform contouring	F-8 Apply tool radius compensation	F-9 Perform program preparation	F-10 Apply special laser coding parameters			
G Investigate Industrial Laser Systems	G-1 Review characteristics of light	G-2 Investigate emission and absorption of light	G-3 Discuss optical cavities and laser modes	G-4 Discuss temporal characteristics of lasers	G-5 Investigate spatial characteristics of lasers	G-6 Discuss laser classifications and characteristics							
H Perform Computer-Aided Drafting (CAD)	H-1 Discuss and understand PC basics	H-2 Discuss CAD basics and file management	H-3 Use drawing settings	H-4 Perform basic editing commands	H-5 Create drawings with accuracy	H-6 Organize drawing information	H-7 Control the display of drawings	H-8 Use intermediate drawing commands	H-9 Perform intermediate editing commands	H-10 Create multi view drawings	H-11 Create sectioned drawings	H-12 Investigate basic dimensioning	H-13 Perform advanced dimensioning
	H-14 Use and manipulate blocks	H-15 Use blocks to automate the drawing process											
I Perform Laser Materials Processing	I-1 Review laser safety standards	I-2 Discuss lasers used for materials processing	I-3 Discuss laser optics and beam characteristics	I-4 Investigate absorption of laser energy	I-5 Use lasers for welding and surface treatment	I-6 Use lasers for material removal							
J Perform Computer-Aided Manufacturing (CAM)	J-1 Discuss and understand the basics of a PC based CAM system	J-2 Discuss basic CAM operations	J-3 Set up cutting tools	J-4 Create simple part profiles	J-5 Create and edit complex part profiles	J-6 Perform roughing, drilling, and counterboring	J-7 Advanced editing of part profiles	J-8 Edit tool paths	J-9 Use construction layers in SmartCAM	J-10 Perform user commands and machine events	J-11 Create families of parts	J-12 Perform CAD/CAM integration	J-13 Perform code generation

LSR PM4
040698

BEST COPY AVAILABLE

Laser Machinist .... apply the principles of electronics, lasers, optics, materials, engineering documentation, CAD/CAM, and systems integration to manufacture products following current industry and company standards.

Duties	Tasks												
A Practice Laser Safety	A-1 Discuss laser safety standards	A-2 Discuss basic laser principles	A-3 Discuss laser hazards	A-4 Discuss control measures									
B Apply Mathematical Concepts	B-1 Perform basic mathematical functions	B-2 Perform algebraic functions	B-3 Study exponents and right triangle geometry	B-4 Study elements of plane and solid geometry	B-5 Perform data evaluation and statistical analysis	B-6 Perform proportioning and interpolation	B-7 Perform basic trigonometric calculations	B-8 Investigate vectors and vector systems	B-9 Investigate the Cartesian Coordiante System				
C Perform Measurement and Inspection	C-1 Study basics of metrology	C-2 Select instruments used for measurement	C-3 Study datums and the three plane concept	C-4 Select gauging tools	C-5 Use CMM for location of features	C-6 Perform measurements for orientation tolerances	C-7 Perform measurment by optical comparison	C-8 Perform measurements for circularity, concentricity, runout, and straightness tolerances	C-9 Investigate advanced metrology topics				
D Troubleshoot Industrial Electronics and Control	D-1 Perform DC voltage, current, and power measurements	D-2 Perform AC voltage, current, and power measurements	D-3 Investigate digital logic systems	D-4 Investigate diode applications	D-5 Investigate transistors and thyristors	D-6 Investigate operational amplifiers	D-7 Investigate power supply circuits						
E Apply Concepts of Modern Optics	E-1 Study reflection and refraction at plane surfaces	E-2 Perform imaging with a single lens	E-3 Perform imaging with multiple lenses	E-4 Study F-stops and apertures	E-5 Use laser beam-expanding collimators	E-6 Study interference	E-7 Study diffraction	E-8 Study polarization	E-9 Investigate radiometry and photometry				
F Perform CNC Machining	F-1 Apply machine specific nomenclature and terminology	F-2 Investigate the Cartesian coordinate system as applied to a CNC mill or laser	F-3 Apply CNC programming language	F-4 Perform start up, tool changing, and ending of programs	F-5 Perform positioning and basic drilling	F-6 Create a sub-program	F-7 Perform contouring	F-8 Apply tool radius compensation	F-9 Perform program preparation	F-10 Apply special laser coding parameters			
G Investigate Industrial Laser Systems	G-1 Review characteristics of light	G-2 Investigate emission and absorption of light	G-3 Discuss optical cavities and laser modes	G-4 Discuss temporal characteristics of lasers	G-5 Investigate spatial characteristics of lasers	G-6 Discuss laser classifications and characteristics							
H Perform Computer-Aided Drafting (CAD)	H-1 Discuss and understand PC basics	H-2 Discuss CAD basics and file management	H-3 Use drawing settings	H-4 Perform basic editing commands	H-5 Create drawings with accuracy	H-6 Organize drawing information	H-7 Control the display of drawings	H-8 Use intermediate drawing commands	H-9 Perform intermediate editing commands	H-10 Create multi view drawings	H-11 Create sectioned drawings	H-12 Investigate basic dimensioning	H-13 Perform advanced dimensioning
	H-14 Use and manipulate blocks	H-15 Use blocks to automate the drawing process											
I Perform Laser Materials Processing	I-1 Review laser safety standards	I-2 Discuss lasers used for materials processing	I-3 Discuss laser optics and beam characteristics	I-4 Investigate absorption of laser energy	I-5 Use lasers for welding and surface treatment	I-6 Use lasers for material removal							
J Perform Computer-Aided Manufacturing (CAM)	J-1 Discuss and understand the basics of a PC based CAM system	J-2 Discuss basic CAM operations	J-3 Set up cutting tools	J-4 Create simple part profiles	J-5 Create and edit complex part profiles	J-6 Perform roughing, drilling, and counterboring	J-7 Advanced editing of part profiles	J-8 Edit tool paths	J-9 Use construction layers in SmartCAM	J-10 Perform user commands and machine events	J-11 Create families of parts	J-12 Perform CAD/CAM integration	J-13 Perform code generation

LEB PM6
040698

BEST COPY AVAILABLE

Duty A

LASER MACHINING SERIES

MASTER Technical Module No. LSR-A1

Subject: **Laser Machining** **Time: 6 Hrs.**

Duty: **Practice Laser Safety**
Task: Discuss Laser Safety Standards

Objective(s):

Upon completion of this unit the student will be able to:
a. Discuss ANSI-Z136.1 "Safe Use of Lasers";
b. Discuss the LIA "Laser Safety Guide"; and,
c. Discuss LIA "Guide for the Selection of Laser Eye Protection".

Instructional Materials:

ANSI-Z136.1 (1993), *"Safe Use of Lasers"*
LIA *"Laser Safety Guide"*
LIA *"Guide for the Selection of Laser Eye Protection"*
LIA *"Laser Safety Comes to Light"* video
MASTER Handout (LSR-A1-HO)
MASTER Laboratory Exercise (LSR-A1-LE)

References:

Introduction to Classical and Modern Optics, Meyer-Arendt, Jurgen R., Prentice Hall, Latest Edition
Light Sources and Wave Optics, CORD Communications, Laser Electro-Optics Series, Latest Edition
Introduction to Lasers, CORD Communications, Laser Electro-Optics Series, Latest Edition
ANSI-Z136.1 (1993), *"Safe Use of Lasers"*, Laser Institute of America, (Publication No. 106)
"Laser Safety Guide", Laser Institute of America, (Publication No. 103)
"Guide for the Selection of Laser Eye Protection", Laser Institute of America, (Publication No. 104)
Video(s): *"Introduction to Laser Safety and Laser Hazards"* Video Training Module, Laser Institute of America, Publication No. 115
"Laser Safety Comes to Light" Video Training Module, Laser Institute of America, Publication No. 116

Student Preparation:

This is the first module in the Laser Machining series.

Introduction:

Developing an effective laser safety program is a critical component to any organization using lasers, whether used in education, industry, or research. Lasers pose serious hazards if not handled properly or if special precautions are not taken. The specific training requirements are a function of the type of laser used as well as the environment in which it is being used such as the laboratory, manufacturing, medical facility, retail establishment, or service environment. The laser industry is constantly changing, as are the requirements for protection. Laser safety standards on the safe use of lasers are processed and submitted to the American National Standards Institute (ANSI) by the Laser Institute of America (LIA) Z136. The scope of the committee covers protection against hazards associated with the use of lasers and optically radiating diodes. In this module, the student will study in depth the ANSI Z136.1 standard for the safe use of lasers.

Presentation Outline:

I. Discuss Laser Safety Basics
   - A. Discuss the type of lasers used at (organization name)
   - B. Provide a brief explanation of the ANSI standards for laser safety
   - C. Discuss the LIA "Laser Safety Guide"
   - D. Discuss LIA "Guide for the Selection of Laser Eye Protection"
   - E. Show video "Laser Safety Comes to Light"

Practical Application:

Students will observe and participate in the discussion of the topics listed above.

Evaluation and/or Verification:

Successful completion of this technical module will be based on the students' successful completion of the following components:

a. Describe the type of lasers used at (organization name);
b. Provide a brief explanation of the ANSI standards for laser safety;
c. Discuss the LIA "Laser Safety Guide"; and,
d. Discuss LIA "Guide for the Selection of Laser Eye Protection".

Summary:

Review the main lesson points using the suggested texts listed in the reference section of this module. Hold class discussion and answer student questions.

Next Lesson Assignment:

MASTER Technical Module (LSR-A2) dealing with basic laser principles.

LSR-A1-HO
Discuss Laser Safety Standards
Attachment 1: **MASTER** Handout

Objective(s):

Upon completion of this unit the student will be able to:

a. Discuss ANSI-Z136.1 "Safe Use of Lasers";
b. Discuss the LIA "Laser Safety Guide"; and,
c. Discuss LIA "Guide for the Selection of Laser Eye Protection".

Module Outline:

I. Discuss Laser Safety Basics
   A. Discuss the type of lasers used at (organization name)
   B. Provide a brief explanation of the ANSI standards for laser safety
   C. Discuss the LIA "Laser Safety Guide"
   D. Discuss LIA "Guide for the Selection of Laser Eye Protection"
   E. Show video "Laser Safety Comes to Light"

LSR-A1-LE
Discuss Laser Safety Standards
Attachment 2: **MASTER** Laboratory Exercise

Successful completion of this technical module will be based on the students' successful completion of the following components:

a. Describe the type of lasers used at (organization name);
b. Provide a brief explanation of the ANSI standards for laser safety;
c. Discuss the LIA "Laser Safety Guide"; and,
d. Discuss LIA "Guide for the Selection of Laser Eye Protection".

LASER MACHINING SERIES

MASTER Technical Module No. LSR-A2

Subject: Laser Machining **Time: 6 Hrs.**

Duty: Practice Laser Safety
Task: Discuss Basic Laser Principles

Objective(s):

Upon completion of this unit the student will be able to:

a. Discuss basic laser operation;
b. Describe the basic elements of a laser;
c. Discuss the various types of lasers; and,
d. Discuss the various classes of lasers.

Instructional Materials:

ANSI-Z136.1 (1993), *"Safe Use of Lasers"*
LIA *"Laser Safety Guide"*
LIA *"Guide for the Selection of Laser Eye Protection"*
LIA *"Laser Safety Comes to Light"* video
MASTER Handout (LSR-A2-HO)
MASTER Laboratory Exercise (LSR-A2-LE)

References:

Introduction to Classical and Modern Optics, Meyer-Arendt, Jurgen R., Prentice Hall, Latest Edition
Light Sources and Wave Optics, CORD Communications, Laser Electro-Optics Series, Latest Edition
Introduction to Lasers, CORD Communications, Laser Electro-Optics Series, Latest Edition
ANSI-Z136.1 (1993), *"Safe Use of Lasers",* Laser Institute of America, (Publication No. 106)
"Laser Safety Guide", Laser Institute of America, (Publication No. 103)
"Guide for the Selection of Laser Eye Protection", Laser Institute of America, (Publication No. 104)
Video(s): *"Introduction to Laser Safety and Laser Hazards"* Video Training Module, Laser Institute of America, Publication No. 115
"Laser Safety Comes to Light" Video Training Module, Laser Institute of America, Publication No. 116

Student Preparation:

Students should have previously completed the following Technical Modules:
LSR-A1 "Discuss Laser Safety Standards"

Introduction:

Developing an effective laser safety program is a critical component to any organization using lasers, whether used in education, industry, or research. Lasers pose serious hazards if not handled properly or if special precautions are not taken. The specific training requirements are a function of the type of laser used as well as the environment in which it is being used such as the laboratory, manufacturing, medical facility, retail establishment, or service environment. The laser industry is constantly changing, as are the requirements for protection. Laser safety standards on the safe use of lasers are processed and submitted to the American National Standards Institute (ANSI) by the Laser Institute of America (LIA) Z136. The scope of the committee covers protection against hazards associated with the use of lasers and optically radiating diodes. In this module, the student will study basic laser principles as outlined in the ANSI Z136.1 standard for the safe use of lasers.

Presentation Outline:

I. Discuss Light Amplification by Stimulated Emission of Radiation
   - A. Discuss how a laser works
     1. Excitation
     2. Population inversion
     3. Spontaneous emission
     4. Stimulated emission
     5. Phase relationship and coherence
     6. Divergence
     7. Optics
   - B. Basic elements of a laser
     1. Excitation mechanism (power source)
     2. Active medium (gas, liquid, or solid)
     3. High reflector
     4. Output coupler
     5. Point source vs. extended source
     6. Output laser modes
   - C. Types of lasers
     1. Pulsed vs. continuous wave (CW)
     2. Ion lasers
     3. CO_2 lasers
     4. Nd:YAG laser
     5. Excimer lasers

6. Semiconductor diode lasers

D. Classification of lasers
   1. Class I
   2. Class II
   3. Class III
   4. Class IIIa
   5. Class IV

Practical Application:

Students will observe and participate in the discussion of the topics listed above.

Evaluation and/or Verification:

Successful completion of this technical module will be based on the students' successful completion of the following components:

a. Explain how a laser works;
b. Describe the basic elements of a laser;
c. Describe the different types of lasers; and,
d. Explain the different classifications of lasers.

Summary:

Review the main lesson points using the suggested texts listed in the reference section of this module. Hold class discussion and answer student questions.

Next Lesson Assignment:

MASTER Technical Module (LSR-A3) dealing with laser hazards.

LSR-A2-HO
Discuss Basic Laser Principles
Attachment 1: **MASTER** Handout

Objective(s):

Upon completion of this unit the student will be able to:

a. Discuss basic laser operation;
b. Describe the basic elements of a laser;
c. Discuss the various types of lasers; and,
d. Discuss the various classes of lasers.

Module Outline:

I. Discuss Light Amplification by Stimulated Emission of Radiation
   A. Discuss how a laser works
      1. Excitation
      2. Population inversion
      3. Spontaneous emission
      4. Stimulated emission
      5. Phase relationship and coherence
      6. Divergence
      7. Optics
   B. Basic elements of a laser
      1. Excitation mechanism (power source)
      2. Active medium (gas, liquid, or solid)
      3. High reflector
      4. Output coupler
      5. Point source vs. extended source
      6. Output laser modes
   C. Types of lasers
      1. Pulsed vs. continuous wave (CW)
      2. Ion lasers
      3. CO_2 lasers
      4. Nd:YAG laser
      5. Excimer lasers
      6. Semiconductor diode lasers
   D. Classification of lasers
      1. Class I
      2. Class II
      3. Class III
      4. Class IIIa
      5. Class IV

Successful completion of this technical module will be based on the students' successful
completion of the following components:

a. Explain how a laser works;
b. Describe the basic elements of a laser;
c. Describe the different types of lasers; and,
d. Explain the different classifications of lasers.

LASER MACHINING SERIES

MASTER Technical Module No. LSR-A3

Subject: Laser Machining **Time: 6 Hrs.**

Duty: Practice Laser Safety
Task: Discuss Laser Hazards

Objective(s):

Upon completion of this unit the student will be able to:
a. Discuss criteria for exposure of eye and skin; and,
b. Evaluate non-beam hazards.

Instructional Materials:

ANSI-Z136.1 (1993), *"Safe Use of Lasers"*
LIA *"Laser Safety Guide"*
LIA *"Guide for the Selection of Laser Eye Protection"*
LIA *"Laser Safety Comes to Light"* video
MASTER Handout (LSR-A3-HO)
MASTER Laboratory Exercise (LSR-A3-LE)

References:

Introduction to Classical and Modern Optics, Meyer-Arendt, Jurgen R., Prentice Hall, Latest Edition
Light Sources and Wave Optics, CORD Communications, Laser Electro-Optics Series, Latest Edition
Introduction to Lasers, CORD Communications, Laser Electro-Optics Series, Latest Edition
ANSI-Z136.1 (1993), *"Safe Use of Lasers",* Laser Institute of America, (Publication No. 106)
"Laser Safety Guide", Laser Institute of America, (Publication No. 103)
"Guide for the Selection of Laser Eye Protection", Laser Institute of America, (Publication No. 104)
Video(s): *"Introduction to Laser Safety and Laser Hazards"* Video Training Module, Laser Institute of America, Publication No. 115
"Laser Safety Comes to Light" Video Training Module, Laser Institute of America, Publication No. 116

Student Preparation:

Students should have previously completed the following Technical Modules:

LSR-A1 "Discuss Laser Safety Standards"
LSR-A2 "Discuss Basic Laser Principles"

Introduction:

Developing an effective laser safety program is a critical component to any organization using lasers, whether used in education, industry, or research. Lasers pose serious hazards if not handled properly or if special precautions are not taken. The specific training requirements are a function of the type of laser used as well as the environment in which it is being used such as the laboratory, manufacturing, medical facility, retail establishment, or service environment. The laser industry is constantly changing, as are the requirements for protection. Laser safety standards on the safe use of lasers are processed and submitted to the American National Standards Institute (ANSI) by the Laser Institute of America (LIA) Z136. The scope of the committee covers protection against hazards associated with the use of lasers and optically radiating diodes. In this module, the student will study in depth the ANSI Z136.1 standard for laser hazards.

Presentation Outline:

I. Discuss Laser Hazards
   A. Discuss criteria for exposure to eye and skin (ANSI Standards Z136.1)
      1. Intrabeam Viewing and Extended Source Ocular Exposures (Section 8.1)
      2. MPE for Ocular Exposures (Section 8.2)
      3. Special Qualifications for Ocular Exposures (Section 8.3)
      4. MPE for Skin Exposure to a Laser Beam (Section 8.4)
   B. Evaluate non-beam hazards (ANSI Standards Z136.1)
      1. Electrical Hazards (Section 7.2)
      2. Laser Generated Air Contaminants (Section 7.3)
      3. Collateral and Plasma Contaminants (Section 7.4)
      4. Fire Hazards (Section 7.5)
      5. Explosion Hazards (Section 7.6)
      6. Compressed Gases (Section 7.7)
      7. Laser Dyes (Section 7.8)

Practical Application:

Students will observe and participate in the discussion of the topics listed above.

Evaluation and/or Verification:

Successful completion of this technical nodule will be based on the students' successful completion of the following components:

a. Discuss the criteria for exposure to eye and skin with a laser; and,
b. Evaluate the non-beam hazards of a laser.

Summary:

Review the main lesson points using the suggested texts listed in the reference section of this module. Hold class discussion and answer student questions.

Next Lesson Assignment:

MASTER Technical Module (LSR-A4) dealing with control measures.

LSR-A3-HO
Discuss Laser Hazards
Attachment 1: **MASTER** Handout

Objective(s):

Upon completion of this unit the student will be able to:
a. Discuss criteria for exposure of eye and skin; and,
b. Evaluate non-beam hazards.

Module Outline:

I. Discuss Laser Hazards
   A. Discuss criteria for exposure to eye and skin (ANSI Standards Z136.1)
      1. Intrabeam Viewing and Extended Source Ocular Exposures (Section 8.1)
      2. MPE for Ocular Exposures (Section 8.2)
      3. Special Qualifications for Ocular Exposures (Section 8.3)
      4. MPE for Skin Exposure to a Laser Beam (Section 8.4)
   B. Evaluate non-beam hazards (ANSI Standards Z136.1)
      1. Electrical Hazards (Section 7.2)
      2. Laser Generated Air Contaminants (Section 7.3)
      3. Collateral and Plasma Contaminants (Section 7.4)
      4. Fire Hazards (Section 7.5)
      5. Explosion Hazards (Section 7.6)
      6. Compressed Gases (Section 7.7)
      7. Laser Dyes (Section 7.8)

Successful completion of this technical module will be based on the students' successful completion of the following components:

a. Discuss the criteria for exposure to eye and skin with a laser; and,
b. Evaluate the non-beam hazards of a laser.

LASER MACHINING SERIES

MASTER Technical Module No. LSR-A4

Subject: Laser Machining **Time: 3 Hrs.**

Duty: Practice Laser Safety
Task: Discuss Control Measures

Objective(s):

Upon completion of this unit the student will be able to:
a. Discuss engineering controls;
b. Discuss environmental controls; and,
c. Discuss administrative controls.

Instructional Materials:

ANSI-Z136.1 (1993), *"Safe Use of Lasers"*
LIA *"Laser Safety Guide"*
LIA *"Guide for the Selection of Laser Eye Protection"*
LIA *"Laser Safety Comes to Light"* video
MASTER Handout (LSR-A4-HO)
MASTER Laboratory Exercise (LSR-A4-LE)

References:

Introduction to Classical and Modern Optics, Meyer-Arendt, Jurgen R., Prentice Hall, Latest Edition
Light Sources and Wave Optics, CORD Communications, Laser Electro-Optics Series, Latest Edition
Introduction to Lasers, CORD Communications, Laser Electro-Optics Series, Latest Edition
ANSI-Z136.1 (1993), *"Safe Use of Lasers",* Laser Institute of America, (Publication No. 106)
"Laser Safety Guide", Laser Institute of America, (Publication No. 103)
"Guide for the Selection of Laser Eye Protection", Laser Institute of America, (Publication No. 104)
Video(s): *"Introduction to Laser Safety and Laser Hazards"* Video Training Module, Laser Institute of America, Publication No. 115
"Laser Safety Comes to Light" Video Training Module, Laser Institute of America, Publication No. 116

Student Preparation:

Students should have previously completed the following Technical Modules:

LSR-A1 "Discuss Laser Safety Standards"
LSR-A2 "Discuss Basic Laser Principles"
LSR-A3 "Discuss Laser Hazards"

Introduction:

Developing an effective laser safety program is a critical component to any organization using lasers, whether used in education, industry, or research. Lasers pose serious hazards if not handled properly or if special precautions are not taken. The specific training requirements are a function of the type of laser used as well as the environment in which it is being used such as the laboratory, manufacturing, medical facility, retail establishment, or service environment. The laser industry is constantly changing, as are the requirements for protection. Laser safety standards on the safe use of lasers are processed and submitted to the American National Standards Institute (ANSI) by the Laser Institute of America (LIA) Z136. The scope of the committee covers protection against hazards associated with the use of lasers and optically radiating diodes. In this module, the student will study in depth the ANSI Z136.1 standard for the laser control measures.

Presentation Outline:

I. Discuss Control Measures (ANSI Z136.1 Section 4)
   A. Discuss engineering controls
      1. Interlocks
      2. Remote controls
      3. Electronic hardware and software designed to keep levels to a controlled level
      4. Key operated switch
      5. Proper labels and warnings
      6. Emission indicators
      7. Beam attenuation
   B. Discuss environmental controls
      1. Controlled access
      2. Beam termination
      3. Enclosures and shielding
      4. Remote interlocks
      5. Laser activation warning systems
      6. Emission delays
      7. Laser safety eyewear
         a. Types (goggles, glasses, shields)
         b. Filtering, labeling, single and multiple wavelengths

c. Optical densities

C. Discuss administrative controls
   1. Access control
   2. Posting of warning signs
   3. Training of personnel
   4. Laser eye exams

Practical Application:

Students will observe and participate in the discussion of the topics listed above.

Evaluation and/or Verification:

Successful completion of this technical module will be based on the students' successful completion of the following components:

a. Describe engineering controls;
b. Describe environmental controls; and,
c. Describe administrative controls.

Summary:

Review the main lesson points using the suggested texts listed in the reference section of this module. Hold class discussion and answer student questions.

Next Lesson Assignment:

MASTER Technical Module (LSR-B1) dealing with performing basic mathematical functions.

LSR-A4-HO
Discuss Control Measures
Attachment 1: **MASTER** Handout

Objective(s):

Upon completion of this unit the student will be able to:

a. Discuss engineering controls;
b. Discuss environmental controls; and,
c. Discuss administrative controls.

Module Outline:

I. Discuss Control Measures (ANSI Z136.1 Section 4)
   A. Discuss engineering controls
      1. Interlocks
      2. Remote controls
      3. Electronic hardware and software designed to keep levels to a controlled level
      4. Key operated switch
      5. Proper labels and warnings
      6. Emission indicators
      7. Beam attenuation
   B. Discuss environmental controls
      1. Controlled access
      2. Beam termination
      3. Enclosures and shielding
      4. Remote interlocks
      5. Laser activation warning systems
      6. Emission delays
      7. Laser safety eyewear
         a. Types (goggles, glasses, shields)
         b. Filtering, labeling, single and multiple wavelengths
         c. Optical densities
   C. Discuss administrative controls
      1. Access control
      2. Posting of warning signs
      3. Training of personnel
      4. Laser eye exams

LSR-A4-LE
Discuss Control Measures
Attachment 2: **MASTER** Laboratory Exercise

Successful completion of this technical module will be based on the students' successful completion of the following components:

a. Describe engineering controls;
b. Describe environmental controls; and,
c. Describe administrative controls.

Laser Machinist .... apply the principles of electronics, lasers, optics, materials, engineering documentation, CAD/CAM, and systems integration to manufacture products following current industry and company standards.

Duties	Tasks												
A Practice Laser Safety	A-1 Discuss laser safety standards	A-2 Discuss basic laser principles	A-3 Discuss laser hazards	A-4 Discuss control measures									
B Apply Mathematical Concepts	B-1 Perform basic mathematical functions	B-2 Perform algebraic functions	B-3 Study exponents and right triangle geometry	B-4 Study elements of plane and solid geometry	B-5 Perform data evaluation and statistical analysis	B-6 Perform proportioning and interpolation	B-7 Perform basic trigonometric calculations	B-8 Investigate vectors and vector systems	B-9 Investigate the Cartesian Coordiante System				
C Perform Measurement and Inspection	C-1 Study basics of metrology	C-2 Select instruments used for measurement	C-3 Study datums and the three plane concept	C-4 Select gauging tools	C-5 Use CMM for location of features	C-6 Perform measurements for orientation tolerances	C-7 Perform measurment by optical comparison	C-8 Perform measurements for circularity, concentricity, runout, and straightness tolerances	C-9 Investigate advanced metrology topics				
D Troubleshoot Industrial Electronics and Control	D-1 Perform DC voltage, current, and power measurements	D-2 Perform AC voltage, current, and power measurements	D-3 Investigate digital logic systems	D-4 Investigate diode applications	D-5 Investigate transistors and thyristors	D-6 Investigate operational amplifiers	D-7 Investigate power supply circuits						
E Apply Concepts of Modern Optics	E-1 Study reflection and refraction at plane surfaces	E-2 Perform imaging with a single lens	E-3 Perform imaging with multiple lenses	E-4 Study F-stops and apertures	E-5 Use laser beam-expanding collimators	E-6 Study interference	E-7 Study diffraction	E-8 Study polarization	E-9 Investigate radiometry and photometry				
F Perform CNC Machining	F-1 Apply machine specific nomenclature and terminology	F-2 Investigate the Cartesian coordinate system as applied to a CNC mill or laser	F-3 Apply CNC programming language	F-4 Perform start up, tool changing, and ending of programs	F-5 Perform positioning and basic drilling	F-6 Create a sub-program	F-7 Perform contouring	F-8 Apply tool radius compensation	F-9 Perform program preparation	F-10 Apply special laser coding parameters			
G Investigate Industrial Laser Systems	G-1 Review characteristics of light	G-2 Investigate emission and absorption of light	G-3 Discuss optical cavities and laser modes	G-4 Discuss temporal characteristics of lasers	G-5 Investigate spatial characteristics of lasers	G-6 Discuss laser classifications and characteristics							
H Perform Computer-Aided Drafting (CAD)	H-1 Discuss and understand PC basics	H-2 Discuss CAD basics and file management	H-3 Use drawing settings	H-4 Perform basic editing commands	H-5 Create drawings with accuracy	H-6 Organize drawing information	H-7 Control the display of drawings	H-8 Use intermediate drawing commands	H-9 Perform intermediate editing commands	H-10 Create multi view drawings	H-11 Create sectioned drawings	H-12 Investigate basic dimensioning	H-13 Perform advanced dimensioning
	H-14 Use and manipulate blocks	H-15 Use blocks to automate the drawing process											
I Perform Laser Materials Processing	I-1 Review laser safety standards	I-2 Discuss lasers used for materials processing	I-3 Discuss laser optics and beam characteristics	I-4 Investigate absorption of laser energy	I-5 Use lasers for welding and surface treatment	I-6 Use lasers for material removal							
J Perform Computer-Aided Manufacturing (CAM)	J-1 Discuss and understand the basics of a PC based CAM system	J-2 Discuss basic CAM operations	J-3 Set up cutting tools	J-4 Create simple part profiles	J-5 Create and edit complex part profiles	J-6 Perform roughing, drilling, and counterboring	J-7 Advanced editing of part profiles	J-8 Edit tool paths	J-9 Use construction layers in SmartCAM	J-10 Perform user commands and machine events	J-11 Create families of parts	J-12 Perform CAD/CAM integration	J-13 Perform code generation

LSR PMS
04/09/98

BEST COPY AVAILABLE

LASER MACHINING SERIES

MASTER Technical Module No. LSR-B1

Subject: **Laser Machining** **Time: 5 Hrs.**

Duty: **Apply Mathematical Concepts**
Task: Perform Basic Mathematical Functions

Objective(s):

Upon completion of this unit the student will be able to:

a. Use and manipulate fractions;
b. Use and manipulate decimals;
c. Calculate percentages;
d. Calculate units of length, area, and volume;
e. Convert between SI (metric) and English (inch) units; and,
f. Use a scientific calculator.

Instructional Materials:

Scientific Calculator
MASTER Handout (LSR-B1-HO)
MASTER Laboratory Exercise (LSR-B1-LE)

References:

Basic Technical Mathematics, Porter, Stuart R., Harper Collins Publishers, Latest Edition
Mathematics for Electronics, Meyers, Nancy, West Publishing, Latest Edition

Student Preparation:

Students should have previously completed the following Technical Modules:
LSR-A1 through LSR-A4 "Practice Laser Safety"

Introduction:

Mathematics is the cornerstone of technology education. It serves as the foundation on which all other technical knowledge is based. A solid understanding of mathematical principles and applications is essential in today's modern society. In the field of Laser Machining, technicians use mathematics to program machine tool operations, calculate laser output parameters, define focal lengths, calculate power

densities, interpret dimensions, etc. In this module we will examine some basic mathematical concepts to prepare for more advanced topics and applications to be discussed in subsequent modules.

Presentation Outline:

I. Perform Basic Mathematical Functions
   - A. Use and manipulate fractions
   - B. Use and manipulate decimals
   - C. Calculate percentages
   - D. Calculate units of length, area, and volume
   - E. Convert between SI (metric) and English (inch) units
   - F. Use a scientific calculator

Practical Application:

Students will perform selected problems from the reference texts on the topics listed above.

Evaluation and/or Verification:

Successful completion of this technical module will be based on the students' successful demonstration of the following concepts:

a. Use and manipulate fractions;
b. Use and manipulate decimals;
c. Calculate percentages;
d. Calculate units of length, area, and volume;
e. Convert between SI (metric) and English (inch) units; and,
f. Use a scientific calculator.

Summary:

Review the main lesson points using the suggested texts listed in the reference section of this module. Hold class discussion and answer student questions.

Next Lesson Assignment:

MASTER Technical Module (LSR-B2) dealing with performing algebraic functions.

LSR-B1-HO
Perform Basic Mathematical Functions
Attachment 1: **MASTER** Handout

Objective(s):

Upon completion of this unit the student will be able to:

a. Use and manipulate fractions;
b. Use and manipulate decimals;
c. Calculate percentages;
d. Calculate units of length, area, and volume;
e. Convert between SI (metric) and English (inch) units; and,
f. Use a scientific calculator.

Module Outline:

I. Perform Basic Mathematical Functions
   A. Use and manipulate fractions
   B. Use and manipulate decimals
   C. Calculate percentages
   D. Calculate units of length, area, and volume
   E. Convert between SI (metric) and English (inch) units
   F. Use a scientific calculator

ERIC

LSR-B1-LE
Perform Basic Mathematical Functions
Attachment 2: **MASTER** Laboratory Exercise

Successful completion of this technical module will be based on the students' successful demonstration of the following concepts:

a. Use and manipulate fractions;
b. Use and manipulate decimals;
c. Calculate percentages;
d. Calculate units of length, area, and volume;
e. Convert between SI (metric) and English (inch) units; and,
f. Use a scientific calculator.

LASER MACHINING SERIES

MASTER Technical Module No. LSR-B2

Subject: Laser Machining **Time: 5 Hrs.**

Duty: Apply Mathematical Concepts
Task: Perform Algebraic Functions

Objective(s):

Upon completion of this unit the student will be able to:

a. Identify equations with one unknown;
b. Solve algebraic equations by isolation of the unknown;
c. Identify equations with fractions;
d. Solve equations by cross multiplying;
e. Identify and solve linear equations; and,
f. Calculate the slope of a line.

Instructional Materials:

Scientific Calculator
MASTER Handout (LSR-B2-HO)
MASTER Laboratory Exercise (LSR-B2-LE)

References:

Basic Technical Mathematics, Porter, Stuart R., Harper Collins Publishers, Latest Edition
Mathematics for Electronics, Meyers, Nancy, West Publishing, Latest Edition

Student Preparation:

Students should have previously completed the following Technical Module:
LSR-B1 "Perform Basic Mathematical Functions"

Introduction:

Mathematics is the cornerstone of technology education. It serves as the foundation on which all other technical knowledge is based. A solid understanding of mathematical principles and applications is essential in today's modern society. In the field of Laser Machining, technicians use mathematics to program machine tool operations, calculate laser output parameters, determine focal lengths, calculate power densities, interpret

dimensions, etc. In this module we will examine basic algebraic operations and solve simple linear equations.

Presentation Outline:

I. Perform Algebraic Functions
   - A. Identify equations with one unknown
   - B. Solve algebraic equations by isolation of the unknown
   - C. Identify equations with fractions
   - D. Solve equations by cross multiplying
   - E. Identify and solve linear equations
   - F. Calculate the slope of a line

Practical Application:

Students will perform selected problems from the reference texts on the topics listed above.

Evaluation and/or Verification:

Successful completion of this technical module will be based on the students' successful demonstration of the following concepts:

a. Identify equations with one unknown;
b. Solve algebraic equations by isolation of the unknown;
c. Identify equations with fractions;
d. Solve equations by cross multiplying;
e. Identify and solve linear equations; and,
f. Calculate the slope of a line.

Summary:

Review the main lesson points using the suggested texts listed in the reference section of this module. Hold class discussion and answer student questions.

Next Lesson Assignment:

MASTER Technical Module (LSR-B3) dealing with exponents and right triangle geometry.

LSR-B2-HO
Perform Algebraic Functions
Attachment 1: **MASTER** Handout

Objective(s):

Upon completion of this unit the student will be able to:

a. Identify equations with one unknown;
b. Solve algebraic equations by isolation of the unknown;
c. Identify equations with fractions;
d. Solve equations by cross multiplying;
e. Identify and solve linear equations; and,
f. Calculate the slope of a line.

Module Outline:

I. Perform Algebraic Functions
   A. Identify equations with one unknown
   B. Solve algebraic equations by isolation of the unknown
   C. Identify equations with fractions
   D. Solve equations by cross multiplying
   E. Identify and solve linear equations
   F. Calculate the slope of a line

ERIC

Successful completion of this technical module will be based on the students' successful demonstration of the following concepts:

a. Identify equations with one unknown;
b. Solve algebraic equations by isolation of the unknown;
c. Identify equations with fractions;
d. Solve equations by cross multiplying;
e. Identify and solve linear equations; and,
f. Calculate the slope of a line.

LASER MACHINING SERIES

MASTER Technical Module NO. LSR-B3

Subject: Laser Machining **Time: 5 Hours**

Duty: Apply Mathematical Concepts
Task: Study Exponents and Right Triangle Geometry

Objective(s):

Upon completion of this unit the student will be able to:

a. Apply the laws of exponents;
b. Calculate exponential functions and roots;
c. Analyze right triangles; and,
d. Use Pythagorean Theorem.

Instructional Materials:

Scientific Calculator
MASTER Handout (LSR-B3-HO)
MASTER Laboratory Exercise (LSR-B3-LE)

References:

Basic Technical Mathematics, Porter, Stuart R., Harper Collins Publishers, Latest Edition
Mathematics for Electronics, Meyers, Nancy, West Publishing, Latest Edition

Student Preparation:

Students should have previously completed the following Technical Module:
LSR-B2 "Perform Algebraic Functions"

Introduction:

Mathematics is the cornerstone of technology education. It serves as the foundation on which all other technical knowledge is based. A solid understanding of mathematical principles and applications is essential in today's modern society. In the field of Laser Machining, technicians use mathematics to program machine tool operations, calculate laser output parameters, determine focal lengths, calculate power densities, interpret dimensions, etc. In this module we will study elements of plane and solid geometry.

Presentation Outline:

I. Study Exponents and Right Triangle Geometry
   - A. Apply the laws of exponents
   - B. Calculate exponential functions and roots
   - C. Analyze right triangles
   - D. Use Pythagorean Theorem

Practical Application:

Students will perform selected problems from the reference texts on the topics listed above.

Evaluation and/or Verification:

Successful completion of this technical module will be based on the students' successful demonstration of the following concepts:

a. Apply the laws of exponents;
b. Calculate exponential functions and roots;
c. Analyze right triangles; and,
d. Use Pythagorean Theorem.

Summary:

Review the main lesson points using the suggested texts listed in the reference section of this module. Hold class discussion and answer student questions.

Next Lesson Assignment:

MASTER Technical Module (LSR-B4) dealing with studying elements of plane and solid geometry.

LSR-B3-HO
Study Exponents and Right Triangle Geometry
Attachment 1: **MASTER** Handout

Objective(s):

Upon completion of this unit the student will be able to:

a. Apply the laws of exponents;
b. Calculate exponential functions and roots;
c. Analyze right triangles; and,
d. Use Pythagorean Theorem.

Module Outline:

I. Study Exponents and Right Triangle Geometry
   A. Apply the laws of exponents
   B. Calculate exponential functions and roots
   C. Analyze right triangles
   D. Use Pythagorean Theorem

ERIC

LSR-B3-HO
Study Exponents and Right Triangle Geometry
Attachment 2: **MASTER** Handout

Successful completion of this technical module will be based on the students' successful demonstration of the following concepts:

a. Apply the laws of exponents;
b. Calculate exponential functions and roots;
c. Analyze right triangles; and,
d. Use Pythagorean Theorem.

LASER MACHINING SERIES

MASTER Technical Module No. LSR-B4

Subject: Laser Machining **Time: 5 Hrs.**

Duty: Apply Mathematical Concepts
Task: Study Elements of Plane and Solid Geometry

Objective(s):

Upon completion of this unit the student will be able to:

a. Calculate the area and circumference of a circle;
b. Determine angular measurements (degrees and radians);
c. Establish a tangent to a circle;
d. Analyze parallel lines, transverse lines, and angles;
e. Perform the bisection of an angle;
f. Calculate the sum of the interior angles of a polygon;
g. Calculate the area of a triangle and irregular shapes; and,
h. Analyze trapezoids.

Instructional Materials:

Scientific Calculator
MASTER Handout (LSR-B4-HO)
MASTER Laboratory Exercise (LSR-B4-LE)

References:

Basic Technical Mathematics, Porter, Stuart R., Harper Collins Publishers, Latest Edition
Mathematics for Electronics, Meyers, Nancy, West Publishing, Latest Edition

Student Preparation:

Students should have previously completed the following Technical Module:
LSR-B3 "Study Exponents and Right Triangle Geometry"

Introduction:

Mathematics is the cornerstone of technology education. It serves as the foundation on which all other technical knowledge is based. A solid understanding of mathematical principles and applications is essential in today's modern society. In the field of Laser

Machining, technicians use mathematics to program machine tool operations, calculate laser output parameters, determine focal lengths, calculate power densities, interpret dimensions, etc. In this module we will study exponents and right triangle geometry.

Presentation Outline:

I. Study Exponents and Right Triangle Geometry
   - A. Calculate the area and circumference of a circle
   - B. Determine angular measurements (degrees and radians)
   - C. Establish a tangent to a circle
   - D. Analyze parallel lines, transverse lines, and angles
   - E. Perform the bisection of an angle
   - F. Calculate the sum of the interior angles of a polygon
   - G. Calculate the area of a triangle and irregular shapes
   - H. Analyze trapezoids

Practical Application:

Students will perform selected problems from the reference texts on the topics listed above.

Evaluation and/or Verification:

Successful completion of this technical module will be based on the students' successful demonstration of the following concepts:

a. Calculate the area and circumference of a circle;
b. Determine angular measurements (degrees and radians);
c. Establish a tangent to a circle;
d. Analyze parallel lines, transverse lines, and angles;
e. Perform the bisection of an angle;
f. Calculate the sum of the interior angles of a polygon;
g. Calculate the area of a triangle and irregular shapes; and,
h. Analyze trapezoids.

Summary:

Review the main lesson points using the suggested texts listed in the reference section of this module. Hold class discussion and answer student questions.

Next Lesson Assignment:

MASTER Technical Module (LSR-B5) dealing with performing data evaluation and statistical analysis.

LSR-B4-HO
Study Elements of Plane and Solid Geometry
Attachment 1: **MASTER** Handout

Objective(s):

Upon completion of this unit the student will be able to:

a. Calculate the area and circumference of a circle;
b. Determine angular measurements (degrees and radians);
c. Establish a tangent to a circle;
d. Analyze parallel lines, transverse lines, and angles;
e. Perform the bisection of an angle;
f. Calculate the sum of the interior angles of a polygon;
g. Calculate the area of a triangle and irregular shapes; and,
h. Analyze trapezoids.

Module Outline:

I. Study Exponents and Right Triangle Geometry
   A. Calculate the area and circumference of a circle
   B. Determine angular measurements (degrees and radians)
   C. Establish a tangent to a circle
   D. Analyze parallel lines, transverse lines, and angles
   E. Perform the bisection of an angle
   F. Calculate the sum of the interior angles of a polygon
   G. Calculate the area of a triangle and irregular shapes
   H. Analyze trapezoids

Successful completion of this technical module will be based on the students' successful demonstration of the following concepts:

a. Calculate the area and circumference of a circle;
b. Determine angular measurements (degrees and radians);
c. Establish a tangent to a circle;
d. Analyze parallel lines, transverse lines, and angles;
e. Perform the bisection of an angle;
f. Calculate the sum of the interior angles of a polygon;
g. Calculate the area of a triangle and irregular shapes; and,
h. Analyze trapezoids.

LASER MACHINING SERIES

MASTER Technical Module No. LSR-B5

Subject: Laser Machining **Time: 5 Hrs.**

Duty: Apply Mathematical Concepts
Task: Perform Data Evaluation and Statistical Analysis

Objective(s):

Upon completion of this unit the student will be able to:
a. Analyze and plot data;
b. Create graphs (line, bar, and pie); and,
c. Calculate mean, normal, and standard deviation.

Instructional Materials:

Scientific Calculator
MASTER Handout (LSR-B5-HO)
MASTER Laboratory Exercise (LSR-B5-LE)

References:

Basic Technical Mathematics, Porter, Stuart R., Harper Collins Publishers, Latest Edition
Mathematics for Electronics, Meyers, Nancy, West Publishing, Latest Edition

Student Preparation:

Students should have previously completed the following Technical Module:
LSR-B4 "Study Elements of Plane and Solid Geometry"

Introduction:

Mathematics is the cornerstone of technology education. It serves as the foundation on which all other technical knowledge is based. A solid understanding of mathematical principles and applications is essential in today's modern society. In the field of Laser Machining, technicians use mathematics to program machine tool operations, calculate laser output parameters, determine focal lengths, calculate power densities, interpret dimensions, etc. In this module we will perform data evaluation and statistical analysis.

Presentation Outline:

I. Perform Data Evaluation and Statistical Analysis
   A. Analyze and plot data
   B. Create graphs (line, bar, and pie)
   C. Calculate mean, normal, and standard deviation

Practical Application:

Students will perform selected problems from the reference texts on the topics listed above.

Evaluation and/or Verification:

Successful completion of this technical module will be based on the students' successful demonstration of the following concepts:

a. Analyze and plot data;
b. Create graphs (line, bar, and pie); and,
c. Calculate mean, normal, and standard deviation.

Summary:

Review the main lesson points using the suggested texts listed in the reference section of this module. Hold class discussion and answer student questions.

Next Lesson Assignment:

MASTER Technical Module (LSR-B6) dealing with performing proportioning and interpolation.

LSR-B5-HO
Perform Data Evaluation and Statistical Analysis
Attachment 1: **MASTER** Handout

Objective(s):

Upon completion of this unit the student will be able to:

a. Analyze and plot data;
b. Create graphs (line, bar, and pie); and,
c. Calculate mean, normal, and standard deviation.

Module Outline:

I. Perform Data Evaluation and Statistical Analysis
   A. Analyze and plot data
   B. Create graphs (line, bar, and pie)
   C. Calculate mean, normal, and standard deviation

Successful completion of this technical module will be based on the students' successful demonstration of the following concepts:

a. Analyze and plot data;
b. Create graphs (line, bar, and pie); and,
c. Calculate mean, normal, and standard deviation.

LASER MACHINING SERIES

MASTER Technical Module No. LSR-B6

Subject: Laser Machining **Time: 5 Hrs.**

Duty: Apply Mathematical Concepts
Task: Perform Proportioning and Interpolation

Objective(s):

Upon completion of this unit the student will be able to:

a. Calculate ratios and proportions;
b. Calculate direct, inverse, and combined variations;
c. Calculate constants of proportionality; and,
d. Perform tabular interpolation.

Instructional Materials:

Scientific Calculator
MASTER Handout (LSR-B6-HO)
MASTER Laboratory Exercise (LSR-B6-LE)

References:

Basic Technical Mathematics, Porter, Stuart R., Harper Collins Publishers, Latest Edition
Mathematics for Electronics, Meyers, Nancy, West Publishing, Latest Edition

Student Preparation:

Students should have previously completed the following Technical Module:
LSR-B5 "Perform Data Evaluations and Statistical Analysis"

Introduction:

Mathematics is the cornerstone of technology education. It serves as the foundation on which all other technical knowledge is based. A solid understanding of mathematical principles and applications is essential in today's modern society. In the field of Laser Machining, technicians use mathematics to program machine tool operations, calculate laser output parameters, determine focal lengths, calculate power densities, interpret dimensions, etc. In this module we will examine the mathematical functions of ratios, proportions, and interpolation.

Presentation Outline:

I. Perform Proportioning and Interpolation
   - A. Calculate ratios and proportions
   - B. Calculate direct, inverse, and combined variations
   - C. Calculate constants of proportionality
   - D. Perform tabular interpolation

Practical Application:

Students will perform selected problems from the reference texts on the topics listed above.

Evaluation and/or Verification:

Successful completion of this technical module will be based on the students' successful demonstration of the following concepts:

a. Calculate ratios and proportions;
b. Calculate direct, inverse, and combined variations;
c. Calculate constants of proportionality; and,
d. Perform tabular interpolation.

Summary:

Review the main lesson points using the suggested texts listed in the reference section of this module. Hold class discussion and answer student questions.

Next Lesson Assignment:

MASTER Technical Module (LSR-B7) dealing with performing basic trigonometric calculations.

LSR-B6-HO
Perform Proportioning and Interpolation
Attachment 1: **MASTER** Handout

Objective(s):

Upon completion of this unit the student will be able to:

a. Calculate ratios and proportions;
b. Calculate direct, inverse, and combined variations;
c. Calculate constants of proportionality; and,
d. Perform tabular interpolation.

Module Outline:

I. Perform Proportioning and Interpolation
   A. Calculate ratios and proportions
   B. Calculate direct, inverse, and combined variations
   C. Calculate constants of proportionality
   D. Perform tabular interpolation

ERIC

Successful completion of this technical module will be based on the students' successful demonstration of the following concepts:

a. Calculate ratios and proportions;
b. Calculate direct, inverse, and combined variations;
c. Calculate constants of proportionality; and,
d. Perform tabular interpolation.

LASER MACHINING SERIES

MASTER Technical Module No. LSR-B7

Subject: Laser Machining **Time: 5 Hrs.**

Duty: Apply Mathematical Concepts
Task: Perform Basic Trigonometric Calculations

Objective(s):

Upon completion of this unit the student will be able to:

a. Calculate the trigonometric functions of sine, cosine, and tangent;
b. Calculate ratios and proportions;
c. Calculate the inverse trigonometric functions of arcsine, arccosine, and arctangent;
d. Calculate direct, inverse, and combined variations; and,
e. Solve a right triangle.

Instructional Materials:

Scientific Calculator
MASTER Handout (LSR-B7-HO)
MASTER Laboratory Exercise (LSR-B7-LE)

References:

Basic Technical Mathematics, Porter, Stuart R., Harper Collins Publishers, Latest Edition
Mathematics for Electronics, Meyers, Nancy, West Publishing, Latest Edition

Student Preparation:

Students should have previously completed the following Technical Module:
LSR-B6 "Perform Proportioning and Interpolation"

Introduction:

Mathematics is the cornerstone of technology education. It serves as the foundation on which all other technical knowledge is based. A solid understanding of mathematical principles and applications is essential in today's modern society. In the field of Laser Machining, technicians use mathematics to program machine tool operations, calculate laser output parameters, determine focal lengths, calculate power densities, interpret

dimensions, etc. In this module we will examine basic trigonometric functions such as sine, cosine, and tangent. In addition, the student will learn how to solve a right triangle.

Presentation Outline:

I. Perform Basic Trigonometric Calculations
   - A. Calculate the trigonometric functions of sine, cosine, and tangent
   - B. Calculate ratios and proportions
   - C. Calculate the inverse trigonometric functions of arcsine, arccosine, and arctangent
   - D. Calculate direct, inverse, and combined variations
   - E. Solve a right triangle

Practical Application:

Students will perform selected problems from the reference texts on the topics listed above.

Evaluation and/or Verification:

Successful completion of this technical module will be based on the students' successful demonstration of the following concepts:

a. Calculate the trigonometric functions of sine, cosine, and tangent;
b. Calculate ratios and proportions;
c. Calculate the inverse trigonometric functions of arcsine, arccosine, and arctangent;
d. Calculate direct, inverse, and combined variations; and,
e. Solve a right triangle.

Summary:

Review the main lesson points using the suggested texts listed in the reference section of this module. Hold class discussion and answer student questions.

Next Lesson Assignment:

MASTER Technical Module (LSR-B8) dealing with investigating vectors and vector systems.

LSR-B7-HO
Perform Basic Trigonometric Calculations
Attachment 1: **MASTER** Handout

Objective(s):

Upon completion of this unit the student will be able to:

a. Calculate the trigonometric functions of sine, cosine, and tangent;
b. Calculate ratios and proportions;
c. Calculate the inverse trigonometric functions of arcsine, arccosine, and arctangent;
d. Calculate direct, inverse, and combined variations; and,
e. Solve a right triangle.

Module Outline:

I. Perform Basic Trigonometric Calculations
   A. Calculate the trigonometric functions of sine, cosine, and tangent
   B. Calculate ratios and proportions
   C. Calculate the inverse trigonometric functions of arcsine, arccosine, and arctangent
   D. Calculate direct, inverse, and combined variations
   E. Solve a right triangle

Successful completion of this technical module will be based on the students' successful demonstration of the following concepts:

a. Calculate the trigonometric functions of sine, cosine, and tangent;
b. Calculate ratios and proportions;
c. Calculate the inverse trigonometric functions of arcsine, arccosine, and arctangent;
d. Calculate direct, inverse, and combined variations; and,
e. Solve a right triangle.

LASER MACHINING SERIES

MASTER Technical Module No. LSR-B8

Subject: Laser Machining **Time: 5 Hrs.**

Duty: Apply Mathematical Concepts
Task: Investigate Vectors and Vector Systems

Objective(s):

Upon completion of this unit the student will be able to:
a. Analyze components of vectors;
b. Perform vector addition; and,
c. Perform vector combination.

Instructional Materials:

Scientific Calculator
MASTER Handout (LSR-B8-HO)
MASTER Laboratory Exercise (LSR-B8-LE)

References:

Basic Technical Mathematics, Porter, Stuart R., Harper Collins Publishers, Latest Edition
Mathematics for Electronics, Meyers, Nancy, West Publishing, Latest Edition

Student Preparation:

Students should have previously completed the following Technical Module:
LSR-B7 "Perform Basic Trigonometric Calculations"

Introduction:

Mathematics is the cornerstone of technology education. It serves as the foundation on which all other technical knowledge is based. A solid understanding of mathematical principles and applications is essential in today's modern society. In the field of Laser Machining, technicians use mathematics to program machine tool operations, calculate laser output parameters, determine focal lengths, calculate power densities, interpret dimensions, etc. In this module we will examine vectors and vector systems. Coverage includes mathematical manipulations of vectors.

Presentation Outline:

I. Investigate Vectors and Vector Systems
   A. Analyze components of vectors
   B. Perform vector addition
   C. Perform vector combination

Practical Application:

Students will perform selected problems from the reference texts on the topics listed above.

Evaluation And/or Verification:

Successful completion of this technical module will be based on the students' successful demonstration of the following concepts:

a. Demonstrate an understanding of the components of vectors;
b. Perform vector addition;
c. Calculate direct, inverse, and combined variations; and,
d. Perform vector combination.

Summary:

Review the main lesson points using the suggested texts listed in the reference section of this module. Hold class discussion and answer student questions.

Next Lesson Assignment:

MASTER Technical Module (LSR-B9) dealing with investigation of the Cartesian Coordinate System.

LSR-B8-HO
Investigate Vectors and Vector Systems
Attachment 1: **MASTER** Handout

Objective(s):

Upon completion of this unit the student will be able to:

a. Analyze components of vectors;
b. Perform vector addition; and,
c. Perform vector combination.

Module Outline:

I. Investigate Vectors and Vector Systems
   A. Analyze components of vectors
   B. Perform vector addition
   C. Perform vector combination

ERIC

LSR-B8-LE
Investigate Vectors and Vector Systems
Attachment 2: **MASTER** Laboratory Exercise

Successful completion of this technical module will be based on the students' successful demonstration of the following concepts:

a. Demonstrate an understanding of the components of vectors;
b. Perform vector addition;
c. Calculate direct, inverse, and combined variations; and,
d. Perform vector combination.

LASER MACHINING SERIES

MASTER Technical Module No. LSR-B9

Subject: Laser Machining **Time: 5 Hrs.**

Duty: Apply Mathematical Concepts
Task: Investigate the Cartesian Coordinate System

Objective(s):

Upon completion of this unit the student will be able to:
a. Study the X-Y coordinate system;
b. Study the X-Y-Z coordinate system; and,
c. Calculate the slope of a line in the Cartesian coordinate system.

Instructional Materials:

Scientific Calculator
MASTER Handout (LSR-B9-HO)
MASTER Laboratory Exercise (LSR-B9-LE)

References:

Basic Technical Mathematics, Porter, Stuart R., Harper Collins Publishers, Latest Edition
Mathematics for Electronics, Meyers, Nancy, West Publishing, Latest Edition

Student Preparation:

Students should have previously completed the following Technical Module:
LSR-B8 "Investigate Vector and Vector Systems"

Introduction:

Mathematics is the cornerstone of technology education. It serves as the foundation on which all other technical knowledge is based. A solid understanding of mathematical principles and applications is essential in today's modern society. In the field of Laser Machining, technicians use mathematics to program machine tool operations, calculate laser output parameters, determine focal lengths, calculate power densities, interpret dimensions, etc. In this module we will investigate the Cartesian coordinate system.

Presentation Outline:

I. Investigate the Cartesian Coordinate System
   A. Study the X-Y coordinate system
   B. Study the X-Y-Z coordinate system
   C. Calculate the slope of a line in the Cartesian coordinate system

Practical Application:

Students will perform selected problems from the reference texts on the topics listed above.

Evaluation and/or Verification:

Successful completion of this technical module will be based on the students' successful demonstration of the following concepts:

a. Plot data in the X-Y coordinate system;
b. Plot data in the X-Y-Z coordinate system; and,
c. Calculate the slope of a line in the Cartesian coordinate system.

Summary:

Review the main lesson points using the suggested texts listed in the reference section of this module. Hold class discussion and answer student questions.

Next Lesson Assignment:

MASTER Technical Module (LSR-C1) dealing with basics of metrology.

LSR-B9-HO
Investigate the Cartesian Coordinate System
Attachment 1: **MASTER** Handout

Objective(s):

Upon completion of this unit the student will be able to:

a. Study the X-Y coordinate system;
b. Study the X-Y-Z coordinate system; and,
c. Calculate the slope of a line in the Cartesian coordinate system.

Module Outline:

I. Investigate the Cartesian Coordinate System
   A. Study the X-Y coordinate system
   B. Study the X-Y-Z coordinate system
   C. Calculate the slope of a line in the Cartesian coordinate system

ERIC

LSR-B9-LE
Investigate the Cartesian Coordinate System
Attachment 2: **MASTER** Laboratory Exercise

Successful completion of this technical module will be based on the students' successful demonstration of the following concepts:

a. Plot data in the X-Y coordinate system;
b. Plot data in the X-Y-Z coordinate system; and,
c. Calculate the slope of a line in the Cartesian coordinate system.

Laser Machinist .... apply the principles of electronics, lasers, optics, materials, engineering documentation, CAD/CAM, and systems integration to manufacture products following current industry and company standards.

Duties	Tasks												
A Practice Laser Safety	A-1 Discuss laser safety standards	A-2 Discuss basic laser principles	A-3 Discuss laser hazards	A-4 Discuss control measures									
B Apply Mathematical Concepts	B-1 Perform basic mathematical functions	B-2 Perform algebraic functions	B-3 Study exponents and right triangle geometry	B-4 Study elements of plane and solid geometry	B-5 Perform data evaluation and statistical analysis	B-6 Perform proportioning and interpolation	B-7 Perform basic trigonometric calculations	B-8 Investigate vectors and vector systems	B-9 Investigate the Cartesian Coordiante System				
C Perform Measurement and Inspection	C-1 Study basics of metrology	C-2 Select instrumenta used for measurement	C-3 Study datums and the three plane concept	C-4 Select gauging tools	C-5 Use CMM for location of features	C-6 Perform measurements for orientation tolerances	C-7 Perform measurment by optical comparison	C-8 Perform measurements for circularity, concentricity, runout, and straightness tolerances	C-9 Investigate advanced metrology topics				
D Troubleshoot Industrial Electronics and Control	D-1 Perform DC voltage, current, and power measurements	D-2 Perform AC voltage, current, and power measurements	D-3 Investigate digital logic systems	D-4 Investigate diode applications	D-5 Investigate transistors and thyristors	D-6 Investigate operational amplifiers	D-7 Investigate power supply circuits						
E Apply Concepts of Modern Optics	E-1 Study reflection and refraction at plane surfaces	E-2 Perform imaging with a single lens	E-3 Perform imaging with multiple lenses	E-4 Study F-stops and apertures	E-5 Use laser beam-expanding collimators	E-6 Study interference	E-7 Study diffraction	E-8 Study polarization	E-9 Investigate radiometry and photometry				
F Perform CNC Machining	F-1 Apply machine specific nomenclature and terminology	F-2 Investigate the Cartesian coordinate system as applied to a CNC mill or laser	F-3 Apply CNC programming language	F-4 Perform start up, tool changing, and ending of programs	F-5 Perform positioning and basic drilling	F-6 Create a sub-program	F-7 Perform contouring	F-8 Apply tool radius compensation	F-9 Perform program preparation	F-10 Apply special laser coding parameters			
G Investigate Industrial Laser Systems	G-1 Review characteristics of light	G-2 Investigate emission and absorption of light	G-3 Discuss optical cavities and laser modes	G-4 Discuss temporal characteristics of lasers	G-5 Investigate spatial characteristics of lasers	G-6 Discuss laser classifications and characteristics							
H Perform Computer-Aided Drafting (CAD)	H-1 Discuss and understand PC basics	H-2 Discuss CAD basics and file management	H-3 Use drawing settings	H-4 Perform basic editing commands	H-5 Create drawings with accuracy	H-6 Organize drawing information	H-7 Control the display of drawings	H-8 Use intermediate drawing commands	H-9 Perform intermediate editing commands	H-10 Create multi view drawings	H-11 Create sectioned drawings	H-12 Investigate basic dimensioning	H-13 Perform advanced dimensioning
	H-14 Use and manipulate blocks	H-15 Use blocks to automate the drawing process											
I Perform Laser Materials Processing	I-1 Review laser safety standards	I-2 Discuss lasers used for materials processing	I-3 Discuss laser optics and beam characteristics	I-4 Investigate absorption of laser energy	I-5 Use lasers for welding and surface treatment	I-6 Use lasers for material removal							
J Perform Computer-Aided Manufacturing (CAM)	J-1 Discuss and understand the basics of a PC based CAM system	J-2 Discuss basic CAM operations	J-3 Set up cutting tools	J-4 Create simple part profiles	J-5 Create and edit complex part profiles	J-6 Perform roughing, drilling, and counterboring	J-7 Advanced editing of part profiles	J-8 Edit tool paths	J-9 Use construction layers in SmartCAM	J-10 Perform user commands and machine events	J-11 Create families of parts	J-12 Perform CAD/CAM integration	J-13 Perform code generation

LSR PM6
040693

Duty C

LASER MACHINING

MASTER Technical Module No. LSR-C1

Subject: Laser Machining **Time: 5 Hrs.**

Duty: Perform Measurement and Inspection
Task: Study Basics of Metrology

Objective(s):

Upon completion of this unit the student will be able to:

a. Discuss the reasons for measurements;
b. Study the language of measurement;
c. Determine how to convert between SI and English systems;
d. Interpret dimensions;
e. Study the use of tolerances;
f. Study the requirements of ANSI Y14.5;
g. Study the three fundamental rules of ANSI Y14.5; and,
h. Interpret the definition of virtual condition.

Instructional Materials:

Scientific Calculator
MASTER Handout (LSR-C1-HO)
MASTER Laboratory Exercise (LSR-C1-LE)

References:

Fundamentals of Dimensional Metrology, Busch, Ted, Delmar Publishing, Latest Edition

Geometric Dimensioning & Tolerancing for Engineering & Manufacturing Technology, Jensen, Cecil, Delmar Publishing, Latest Edition

Fundamentals of Geometric Dimensioning & Tolerancing, Krulikowski, Alex, Delmar Publishing, Latest Edition

Dimensioning and Tolerancing, ANSI Y14.5-1994, American Society of Mechanical Engineers, Latest Edition

Student Preparation:

Students should have previously completed the following Technical Modules:

LSR-A1 through LSR-A4 "Practice Laser Safety"
LSR-B1 through LSR-B9 "Apply Mathematical Concepts"

Introduction:

The design and manufacturing of today's products requires engineering documentation (i.e., the engineering drawing or blueprint). The drawing contains the views necessary to fully describe the part to be manufactured. Also, and most important, the size of the part, including all associated features, are documented using dimensions. These dimensions are then used to create the part using the appropriate manufacturing equipment. As products become more complex or require the interchangeability of parts, the need to further define part drawings is required. The method, known as Geometric Dimensioning and Tolerancing (GD&T), defined not only the dimensions but the geometric shape of the part with respect to established planes or datums. The GD&T method takes into account the functionality of the part when placed in its assembled state. These GD&T concepts include perpendicularity, parallelism, position, flatness, etc.

In order to maintain quality control and monitor the processes involved with design and manufacturing, part inspection is required. The inspection process ensures dimensional and geometric print compliance as well as statistically monitoring the manufacturing process. Inspection is part of the overall topic of metrology. Metrology, by definition, includes the fundamental measures of length, time, mass, and temperature. Measurement (mensuration) is that part of metrology which involves the finding of lengths, areas, and volumes. This data, which is gathered during part inspection, is then used to ensure print compliance and manufacturing consistency.

In this module, the student will be introduced to the reasons, language, and numerical systems of measurement. Coverage includes discussing and understanding dimensions and tolerances with respect to the industrial standard ANSI Y14.5. Finally, the concepts of GD&T are introduced via ANSI Y14.5, including a discussion of the term "virtual condition".

Presentation Outline:

I. Study Basics of Metrology
   - A. Discuss the reasons for measurements
   - B. Study the language of measurement
   - C. Determine how to convert between SI and English systems
   - D. Interpret dimensions
   - E. Study the use of tolerances
   - F. Study the requirements of ANSI Y14.5
   - G. Study the three fundamental rules of ANSI Y14.5
   - H. Interpret the definition of virtual condition

Practical Application:

Students will observe and participate in the discussion of the topics listed above. Following the demonstrations, students will complete the exercises assigned by the instructor.

Evaluation and/or Verification:

Successful completion of this technical module will be based on the students' successful completion of the following components:

a. Discuss the reasons for measurements;
b. Demonstrate an understanding of the language of measurement;
c. Convert between SI and English systems;
d. Interpret dimensions;
e. Demonstrate an understanding of use of tolerances;
f. Demonstrate an understanding of the requirements of ANSI Y14.5;
g. Demonstrate an understanding of the three fundamental rules of ANSI Y14.5; and,
h. Define and calculate virtual condition.

Summary:

Review the main lesson points using the suggested text(s) listed in the reference section of this module. Hold class discussion and answer student questions.

Next Lesson Assignment:

MASTER Technical Module (LSR-C2) dealing with selecting instruments used for measurement.

LSR-C1-HO
Study Basics of Metrology
Attachment 1: **MASTER** Handout

Objective(s):

Upon completion of this unit the student will be able to:

a. Discuss the reasons for measurements;
b. Study the language of measurement;
c. Determine how to convert between SI and English systems;
d. Interpret dimensions;
e. Study the use of tolerances;
f. Study the requirements of ANSI Y14.5;
g. Study the three fundamental rules of ANSI Y14.5; and,
h. Interpret the definition of virtual condition.

Module Outline:

I. Study Basics of Metrology
   A. Discuss the reasons for measurements
   B. Study the language of measurement
   C. Determine how to convert between SI and English systems
   D. Interpret dimensions
   E. Study the use of tolerances
   F. Study the requirements of ANSI Y14.5
   G. Study the three fundamental rules of ANSI Y14.5
   H. Interpret the definition of virtual condition

ERIC

LSR-C1-LE
Study Basics of Metrology
Attachment 2: **MASTER** Laboratory Exercise

Successful completion of this technical module will be based on the students' successful completion of the following components:

a. Discuss the reasons for measurements;
b. Demonstrate an understanding of the language of measurement;
c. Convert between SI and English systems;
d. Interpret dimensions;
e. Demonstrate an understanding of use of tolerances;
f. Demonstrate an understanding of the requirements of ANSI Y14.5;
g. Demonstrate an understanding of the three fundamental rules of ANSI Y14.5; and,
h. Define and calculate virtual condition.

LASER MACHINING SERIES

MASTER Technical Module No. LSR-C2

Subject: Laser Machining **Time: 10 Hrs.**

Duty: Perform Measurement and Inspection
Task: Select Instruments Used for Measurement

Objective(s):

Upon completion of this unit the student will be able to:

a. Use vernier calipers;
b. Use dial calipers;
c. Read scales;
d. Use micrometers;
e. Use hole and depth micrometers; and,
f. Set up and use dial indicators.

Instructional Materials:

Six inch vernier caliper .001 in. discrimination
Six inch dial caliper .001 in. discrimination
Six inch steel rule 1/32, 1/64, 10ths, and 50ths discriminations
Zero to one inch (0-1") outside micrometer .001 discrimination
Zero to three inch (0-3") depth micrometer .001 discrimination
Internal (hole) micrometer (range .200 - .250) discrimination .0001
Dial indicator .001 discrimination, .125 in. total
Magnetic base indicator holder (used for dial indicator)
MASTER Handout (LSR-C2-HO)
MASTER Laboratory Exercise (LSR-C2-LE)
MASTER Laboratory Aid (LSR-C2-LA)

Note: The instructor may use his/her own parts for measurement. If not practical, a 70-piece model kit containing wood and plastic parts may be purchased. This is available from the Society of Manufacturing Engineers, order code: 2427-2600.

References:

Fundamentals of Dimensional Metrology, Busch, Ted, Delmar Publishing, Latest Edition

Geometric Dimensioning & Tolerancing for Engineering & Manufacturing Technology, Jensen, Cecil, Delmar Publishing, Latest Edition

Fundamentals of Geometric Dimensioning & Tolerancing, Krulikowski, Alex, Delmar Publishing, Latest Edition

Dimensioning and Tolerancing, ANSI Y14.5-1994, American Society of Mechanical Engineers, Latest Edition

Student Preparation:

Students should have previously completed the following Technical Modules:

LSR-C1 "Study Basics of Metrology"

Introduction:

The design and manufacturing of today's products requires engineering documentation (i.e., the engineering drawing or blueprint). The drawing contains the views necessary to fully describe the part to be manufactured. Also, and most important, the size of the part including all associated features are documented using dimensions. These dimensions are then used to create the part using the appropriate manufacturing equipment. As products become more complex or require the interchangeablility of parts, the need to further define part drawings is required. The method, known as Geometric Dimensioning and Tolerancing (GD&T), defined not only the dimensions but the geometric shape of the part with respect to established planes or datums. The GD&T method takes into account the functionality of the part when placed in its assembled state. These GD&T concepts include perpendicularity, parallelism, position, flatness, etc.

In order to maintain quality control and monitor the processes involved with design and manufacturing, part inspection is required. The inspection process ensures dimensional and geometric print compliance as well as statistically monitoring the manufacturing processes. Inspection is part of the overall topic of metrology. Metrology, by definition, includes the fundamental measures of length, time, mass, and temperature. Measurement (mensuration) is that part of metrology which involves the finding of lengths, areas, and volumes. This data, which is gathered during part inspection, is then used to ensure print compliance and manufacturing consistency.

In this module, the student will become familiar with the instruments used for measurement. Coverage includes the use of both vernier and dial calipers, steel rules, outside, hole, and depth micrometers, and dial indicators. Consistent with each instrument is the coverage of how to read the scales.

Presentation Outline:

I. Select Instruments Used for Measurement
   - A. Use vernier calipers
   - B. Use dial calipers
   - C. Read scales
   - D. Use micrometers
   - E. Use hole and depth micrometers
   - F. Set up and use dial indicators

Practical Application:

Students will observe and participate in the discussion of the topics listed above. Following the demonstrations, students will practice making measurements using the instruments discussed above.

Evaluation and/or Verification:

Successful completion of this technical module will be based on the students' successful completion of the following components:

a. Demonstrate correct usage of vernier calipers;
b. Demonstrate correct usage of dial calipers;
c. Demonstrate how to correctly read scales;
d. Demonstrate correct usage of micrometers;
e. Demonstrate correct usage of hole and depth micrometers; and,
f. Demonstrate proper set up and usage of dial indicators.

Summary:

Review the main lesson points using the suggested text(s) listed in the reference section of this module. Hold class discussion and answer student questions.

Next Lesson Assignment:

MASTER Technical Module (LSR-C3) pertaining to datums and the three-plane concept.

LSR-C2-HO
Select Instruments Used for Measurement
Attachment 1: **MASTER** Handout

Objective(s):

Upon completion of this unit the student will be able to:

a. Use vernier calipers;
b. Use dial calipers;
c. Read scales;
d. Use micrometers;
e. Use hole and depth micrometers; and,
f. Set up and use dial indicators.

Module Outline:

I. Select Instruments Used for Measurement
   A. Use vernier calipers
   B. Use dial calipers
   C. Read scales
   D. Use micrometers
   E. Use hole and depth micrometers
   F. Set up and use dial indicators

Successful completion of this technical module will be based on the students' successful completion of the following components:

a. Demonstrate correct usage of vernier calipers;
b. Demonstrate correct usage of dial calipers;
c. Demonstrate how to correctly read scales;
d. Demonstrate correct usage of micrometers;
e. Demonstrate correct usage of hole and depth micrometers; and,
f. Demonstrate proper set up and usage of dial indicators.

LASER MACHINING SERIES

MASTER Technical Module No. LSR-C3

Subject: Laser Machining **Time: 5 Hrs.**

Duty: Perform Measurement and Inspection
Task: Study Datums and the Three Plane Concept

Objective(s):

Upon completion of this unit the student will be able to:

a. Discuss the use of datums;
b. Discuss the three-plane system: primary, secondary, and tertiary;
c. Discuss the use of material condition symbols (MMC, LMC, RFS); and,
d. Discuss the use of target points to define datums.

Instructional Materials:

A complete video tape series is available from the Society of Manufacturing Engineers. This series includes 16 videotapes, a workbook, and leader's guide. The order code is VT595-2600 and the cost is $5950 ($5700 for SME members). This series is a good supplement for class room lectures.

MASTER Handout (LSR-C3-HO)
MASTER Laboratory Exercise (LSR-C3-LE)
MASTER Laboratory Aid (LSR-C3-LA)

References:

Fundamentals of Dimensional Metrology, Busch, Ted, Delmar Publishing, Latest Edition

Geometric Dimensioning & Tolerancing for Engineering & Manufacturing Technology, Jensen, Cecil, Delmar Publishing, Latest Edition

Fundamentals of Geometric Dimensioning & Tolerancing, Krulikowski, Alex, Delmar Publishing, Latest Edition

Dimensioning and Tolerancing, American Society of Mechanical Engineers, ANSI Y14.5-1994, Latest Edition

Student Preparation:

Students should have previously completed the following Technical Modules:

LSR-C2 "Select Instruments Used for Measurement"

Introduction:

The design and manufacturing of today's products requires engineering documentation (i.e., the engineering drawing or blueprint). The drawing contains the views necessary to fully describe the part to be manufactured. Also, and most important, the size of the part including all associated features are documented using dimensions. These dimensions are then used to create the part using the appropriate manufacturing equipment. As products become more complex or require the interchangeablility of parts, the need to further define part drawings is required. The method, known as Geometric Dimensioning and Tolerancing (GD&T), defined not only the dimensions but the geometric shape of the part with respect to established planes or datums. The GD&T method takes into account the functionality of the part when placed in its assembled state. These GD&T concepts include perpendicularity, parallelism, position, flatness, etc.

In order to maintain quality control and monitor the processes involved with design and manufacturing, part inspection is required. The inspection process ensures dimensional and geometric print compliance as well as statistically monitoring the manufacturing processes. Inspection is part of the overall topic of metrology. Metrology, by definition, includes the fundamental measures of length, time, mass, and temperature. Measurement (mensuration) is that part of metrology which involves the finding of lengths, areas, and volumes. This data, which is gathered during part inspection, is then used to ensure print compliance and manufacturing consistency.

In this module, the student will become familiar with datums as defined by the three-plane system. Datums are used as reference locations from which dimensions are taken. The student will study the use of target points to define datums. Three points for the primary datum, two points for the secondary datum, and one point for the tertiary datum. Coverage includes the use of material modifiers to gain bonus tolerance.

Presentation Outline:

I. Study Datums and the Three Plane Concept
   - A. Discuss the use of datums
   - B. Discuss the three-plane system: primary, secondary, and tertiary
   - C. Discuss the use of target points to define datums
   - D. Discuss the use of material condition symbols (MMC, LMC, RFS)

Practical Application:

Students will observe and participate in the discussion of the topics listed above. Following the demonstrations, students will complete the exercises assigned by the instructor.

Evaluation and/or Verification:

Successful completion of this technical module will be based on the students' successful completion of the following components:

a. Demonstrate an understanding of the use of datums;
b. Demonstrate an understanding of the three-plane system: primary, secondary, and tertiary;
c. Demonstrate an understanding of the use of material condition symbols (MMC, LMC, RFS); and,
d. Demonstrate an understanding of the use of target points to define datums.

Summary:

Review the main lesson points using the suggested text(s) listed in the reference section of this module. Hold class discussion and answer student questions.

Next Lesson Assignment:

MASTER Technical Module (LSR-C4) dealing with selecting gauging tools.

LSR-C3-HO
Study Datums and the Three Plane Concept
Attachment 1: **MASTER** Handout

Objective(s):

Upon completion of this unit the student will be able to:

a. Discuss the use of datums;
b. Discuss the three-plane system: primary, secondary, and tertiary;
c. Discuss the use of material condition symbols (MMC, LMC, RFS); and,
d. Discuss the use of target points to define datums.

Module Outline:

I. Study Datums and the Three Plane Concept
   A. Discuss the use of datums
   B. Discuss the three-plane system: primary, secondary, and tertiary
   C. Discuss the use of target points to define datums
   D. Discuss the use of material condition symbols (MMC, LMC, RFS)

ERIC

LSR-C3-LE
Study Datums and the Three Plane Concept
Attachment 2: **MASTER** Laboratory Exercise

Successful completion of this technical module will be based on the students' successful completion of the following components:

a. Demonstrate an understanding of the use of datums;
b. Demonstrate an understanding of the three-plane system: primary, secondary, and tertiary;
c. Demonstrate an understanding of the use of material condition symbols (MMC, LMC, RFS); and,
d. Demonstrate an understanding of the use of target points to define datums.

LASER MACHINING SERIES

MASTER Technical Module No. LSR-C4

Subject: **Laser Machining** **Time: 10 Hrs.**

Duty: **Perform Measurement and Inspection**
Task: Select Gauging Tools

Objective(s):

Upon completion of this unit the student will be able to:

a. Use gage blocks;
b. Use plug (pin) gages;
c. Use a height gage;
d. Use "Go/No Go" gages; and,
e. Design and build functional gages.

Instructional Materials:

Gage block set in case
0-24" electronic height gage
Class X Steel Plug Gage set, .251-.500 Range
MASTER Handout (LSR-C4-HO)
MASTER Laboratory Exercise (LSR-C4-LE)
MASTER Laboratory Aid (LSR-C4-LA)

References:

Fundamentals of Dimensional Metrology, Busch, Ted, Delmar Publishing, Latest Edition

Geometric Dimensioning & Tolerancing for Engineering & Manufacturing Technology, Jensen, Cecil, Delmar Publishing, Latest Edition

Fundamentals of Geometric Dimensioning & Tolerancing, Krulikowski, Alex, Delmar Publishing, Latest Edition

Dimensioning and Tolerancing, American Society of Mechanical Engineers, ANSI Y14.5-1994, Latest Edition

Student Preparation:

Students should have previously completed the following Technical Modules:

LSR-C3 "Study Datums and the Three Plane Concept"

Introduction:

The design and manufacturing of today's products requires engineering documentation (i.e., the engineering drawing or blueprint). The drawing contains the views necessary to fully describe the part to be manufactured. Also, and most important, the size of the part including all associated features are documented using dimensions. These dimensions are then used to create the part using the appropriate manufacturing equipment. As products become more complex or require the interchangeablility of parts, the need to further define part drawings is required. The method, known as Geometric Dimensioning and Tolerancing (GD&T) defined not only the dimensions but also the geometric shape of the part with respect to established planes or datums. The GD&T method takes into account the functionality of the part when placed in its assembled state. These GD&T concepts include perpendicularity, parallelism, position, flatness, etc.

In order to maintain quality control and monitor the processes involved with design and manufacturing, part inspection is required. The inspection process ensures dimensional and geometric print compliance as well as statistically monitoring the manufacturing processes. Inspection is part of the overall topic of metrology. Metrology, by definition, includes the fundamental measures of length, time, mass, and temperature. Measurement (mensuration) is that part of metrology which involves the finding of lengths, areas, and volumes. This data, which is gathered during part inspection, is then used to ensure print compliance and manufacturing consistency.

In this module, the student will become familiar with gauging tools. The use of gage blocks, plug gages, height gages, and go/no go gages are covered.

Presentation Outline:

I. Select Gauging Tools
   - A. Use gage blocks
   - B. Use plug (pin) gages
   - C. Use a height gage
   - D. Use "go/no go" gages
   - E. Design and build functional gages

Practical Application:

Students will observe and participate in the discussion of the topics listed above. Following the demonstrations, students will complete measurements using the instruments discussed above. The instructor may use his/her own parts for measurement. If not practical, a 70-piece model kit containing wood and plastic parts may be purchased. This is available from the Society of Manufacturing Engineers, order code: 2427-2600.

In addition, students will complete the functional gauging problems assigned by the instructor.

Evaluation and/or Verification:

Successful completion of this technical module will be based on the students' successful completion of the following components:

a. Demonstrate correct usage of gage blocks;
b. Demonstrate correct usage of plug gages;
c. Demonstrate correct usage of a height gage;
d. Demonstrate correct usage of "Go/No Go" gages; and,
e. Demonstrate how to design and build functional gages.

Summary:

Review the main lesson points using the suggested text(s) listed in the reference section of this module. Hold class discussion and answer student questions.

Next Lesson Assignment:

MASTER Technical Module (LSR-C5) dealing with using the coordinate measurement machines for location of features.

LSR-C4-HO
Select Gauging Tools
Attachment 1: **MASTER** Handout

Objective(s):

Upon completion of this unit the student will be able to:

a. Use gage blocks;
b. Use plug (pin) gages;
c. Use a height gage;
d. Use "Go/No Go" gages; and,
e. Design and build functional gages.

Module Outline:

I. Select Gauging Tools
   A. Use gage blocks
   B. Use plug (pin) gages
   C. Use a height gage
   D. Use "go/no go" gages
   E. Design and build functional gages

LSR-C4-LE
Select Gauging Tools
Attachment 2: **MASTER** Laboratory Exercise

Successful completion of this technical module will be based on the students' successful completion of the following components:

a. Demonstrate correct usage of gage blocks;
b. Demonstrate correct usage of plug gages;
c. Demonstrate correct usage of a height gage;
d. Demonstrate correct usage of "Go/No Go" gages; and,
e. Demonstrate how to design and build functional gages.

LASER MACHINING SERIES

MASTER Technical Module No. LSR-C5

Subject: Laser Machining **Time: 10 Hrs.**

Duty: Perform Measurement and Inspection
Task: Use CMM for Location of Features

Objective(s):

Upon completion of this unit the student will be able to:

a. Assess the importance of Coordinate Measurement machines (CMM);
b. Set up and use a CMM;
c. Calibrate a CMM;
d. Set up and measure hole locations with respect to applicable datums;
e. Set up and measure location for non-cylindrical features;
f. Set up and measure location for multiple pattern features; and,
g. Set up and measure the projected tolerance zone.

Instructional Materials:

Note: The instructor may use his/her own parts for measurement. For example, 10-20 pieces *drilled block* prepared per LSR-C5-LW1. If not practical, a 70-piece model kit containing wood and plastic parts may be purchased. This is available from the Society of Manufacturing Engineers, order code: 2427-2600.

Manual for your specific coordinate measuring machine (CMM)
Alternative: Measurement instruments per instructional materials listed in LSR-C2 and LSR-C4.
MASTER Handout (LSR-C5-HO)
MASTER Laboratory Exercise (LSR-C5-LE)
MASTER Laboratory Worksheet No 1 (LSR-C5-LW1)
MASTER Laboratory Worksheet No. 2 (LSR-C5-LW2)
MASTER Laboratory Aid (LSR-C5-LA)

References:

Fundamentals of Dimensional Metrology, Busch, Ted, Delmar Publishing, Latest Edition
Geometric Dimensioning & Tolerancing for Engineering & Manufacturing Technology, Jensen, Cecil, Delmar Publishing, Latest Edition

Fundamentals of Geometric Dimensioning & Tolerancing, Krulikowski, Alex, Delmar Publishing, Latest Edition
Dimensioning and Tolerancing, American Society of Mechanical Engineers, ANSI Y14.5-1994, Latest Edition
Manual for your specific coordinate measuring machine (CMM)

Student Preparation:

Students should have previously completed the following Technical Modules:
LSR-C4 "Select Gauging Tools"

Introduction:

The design and manufacturing of today's products requires engineering documentation (i.e., the engineering drawing or blueprint). The drawing contains the views necessary to fully describe the part to be manufactured. Also, and most important, the size of the part including all associated features are documented using dimensions. These dimensions are then used to create the part using the appropriate manufacturing equipment. As products become more complex or require the interchangeablility of parts, the need to further define part drawings is required. The method, known as Geometric Dimensioning and Tolerancing (GD&T) defined not only the dimensions but also the geometric shape of the part with respect to established planes or datums. The GD&T method takes into account the functionality of the part when placed in its assembled state. These GD&T concepts include perpendicularity, parallelism, position, flatness, etc.

In order to maintain quality control and monitor the processes involved with design and manufacturing, part inspection is required. The inspection process ensures dimensional and geometric print compliance as well as statistically monitoring the manufacturing processes. Inspection is part of the overall topic of metrology. Metrology, by definition, includes the fundamental measures of length, time, mass, and temperature. Measurement (mensuration) is that part of metrology which involves the finding of lengths, areas, and volumes. This data, which is gathered during part inspection, is then used to ensure print compliance and manufacturing consistency.

In this module, the student will become familiar with a coordinate measurement machine. Coverage includes set-up, use, and calibration of the CMM. Applications for the CMM include hole locations, non-cylindrical features, multiple patterns, and projected tolerance zones.

Presentation Outline:

I. Use CMM for Location of Features
   A. Assess the importance of Coordinate Measurement machines (CMM)

B. Set up and use a CMM
C. Calibrate a CMM
D. Set up and measure hole locations with respect to applicable datums
E. Set up and measure location for non-cylindrical features
F. Set up and measure location for multiple pattern features
G. Set up and measure the projected tolerance zone

Practical Application:

Students will observe and participate in the discussion of the topics listed above. Following the demonstrations, students will complete measurements using the CMM discussed above and complete LSR-C5-LW2.

Evaluation and/or Verification:

Successful completion of this technical module will be based on the students' successful completion of the following components:

a. Discuss the importance of Coordinate Measurement machines (CMM);
b. Demonstrate the ability to set up and use a CMM;
c. Demonstrate and understanding of CMM Calibration;
d. Set up and measure hole locations with respect to applicable datums;
e. Set up and measure location for non-cylindrical features;
f. Set up and measure location for multiple pattern features; and,
g. Set up and measure the projected tolerance zone.

Summary:

Review the main lesson points using the suggested text(s) listed in the reference section of this module. Hold class discussion and answer student questions.

Next Lesson Assignment:

MASTER Technical Module (LSR-C6) pertaining to measurements for orientation tolerances.

LSR-C5-HO
Use CMM for Location of Features
Attachment 1: **MASTER** Handout

Objective(s):

Upon completion of this unit the student will be able to:

a. Assess the importance of Coordinate Measurement machines (CMM);
b. Set up and use a CMM;
c. Calibrate a CMM;
d. Set up and measure hole locations with respect to applicable datums;
e. Set up and measure location for non-cylindrical features;
f. Set up and measure location for multiple pattern features; and,
g. Set up and measure the projected tolerance zone.

Module Outline:

I. Use CMM for Location of Features
   A. Assess the importance of Coordinate Measurement machines (CMM)
   B. Set up and use a CMM
   C. Calibrate a CMM
   D. Set up and measure hole locations with respect to applicable datums
   E. Set up and measure location for non-cylindrical features
   F. Set up and measure location for multiple pattern features
   G. Set up and measure the projected tolerance zone

LSR-C5-LE
Use CMM for Location of Features
Attachment 2: **MASTER** Laboratory Exercise

Successful completion of this technical module will be based on the students' successful completion of the following components:

a. Discuss the importance of Coordinate Measurement machines (CMM);
b. Demonstrate the ability to set up and use a CMM;
c. Demonstrate and understanding of CMM Calibration;
d. Set up and measure hole locations with respect to applicable datums;
e. Set up and measure location for non-cylindrical features;
f. Set up and measure location for multiple pattern features; and,
g. Set up and measure the projected tolerance zone.

Operation Sheet for Drilled Block

Material: Aluminum

1. Mill block square 6 sides
2. Mill thickness to .750
3. Mill width to 1.875
4. Mill length to 4.875
5. Put layout Dykem on part
6. Layout all dimensions with height gauge
7. Center punch .500 dia. and .750 dia. holes
8. Center drill .500 dia. and .750 dia. holes on drill press
9. Set-up the edge finder in the vertical mill, locate the remaining holes and center drill these holes
10. Drill and ream .500 and .750 holes on the drill press
    (Allow 1/64 for reaming on these holes)
11. Drill remaining holes on vertical miller
    (Make sure not to drill into the parallels)
12. Counterbore .250 holes on drill press
13. Chamfer all holes 1/16 on drill press both sides
14. Tap 10-32 holes using hand taper

LSR-C5-LW1
Use CMM for Location of Features
Attachment 3: MASTER Laboratory Worksheet No. 1
Page 2 of 2

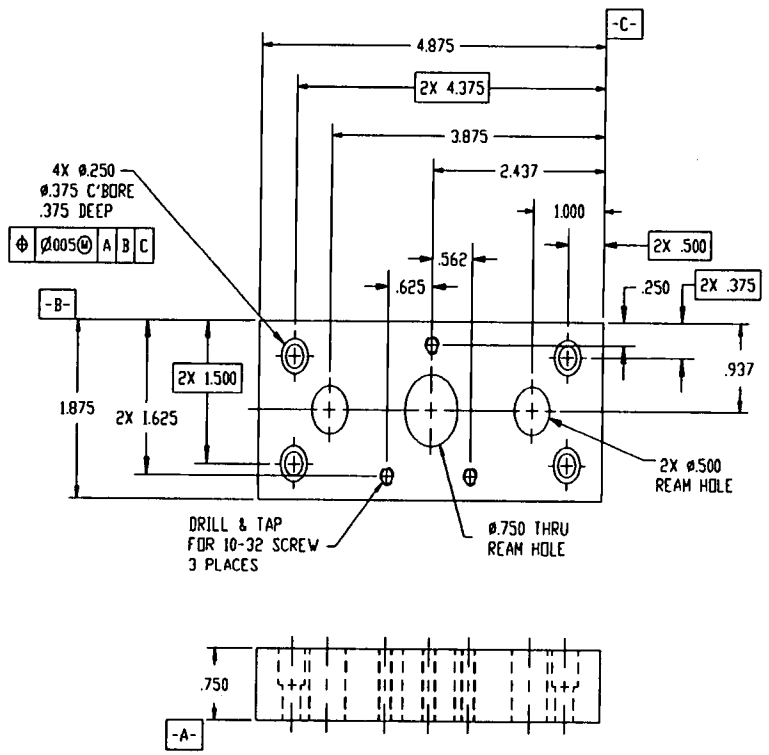

233

234

NOTES: UNLESS OTHERWISE SPECIFIED
LIMITS ON TOLERANCES ARE ±.005
BREAK ALL SHARP EDGES

PART NAME: DRILLED BLOCK

BEST COPY AVAILABLE

Inspection Report: Drilled Block

Directions for inspection:

A. Measure using CMM if available or steel rules, dial calipers, micrometers, gage blocks, gage pins, or as appropriate to determine the actual sizes and locations of the features.

B. Place the measured (actual) size and location next to the stated dimension on the print.

C. For the true position features: use CMM if available, or calipers, gage blocks, gage pins, etc. to inspect each counterbored hole for the stated geometric position which is stated on the print. Record the actual position measured next to the basic dimension as shown on the print. Record next to each feature on the print the size measured.

D. Record on this sheet the part name, part number, and the members of your inspection team.

E. Staple this sheet to the blueprint and hand it in when complete.

Note: Be sure to have an inspection report and a part print for each part inspected.

Part Name _____ Part Number _____

Part inspected by: _____

_____

_____

_____

Rules of Conduct

1. Absolutely no horseplay or practical joking will be tolerated.
2. Do not talk to anyone who is operating a machine.
3. Walk only in the designated traffic lanes.
4. Dress appropriately; at the absolute minimum, you must have:
   a. No loose clothing, including ties;
   b. Long hair properly stowed;
   c. No jewelry;
   d. Hard, closed-toe shoes;
   e. Eye protection (safety glasses); and,
   f. Ear protection (plugs or headset).
5. Follow all institutional safety rules.

LASER MACHINING SERIES

MASTER Technical Module No. LSR-C6

Subject: Laser Machining **Time: 10 Hrs.**

Duty: Perform Measurement and Inspection
Task: Perform Measurements for Orientation Tolerances

Objective(s):

Upon completion of this unit the student will be able to:

a. Study and use surface plates;
b. Use angle plates, sine plates, mandrels, and vee blocks;
c. Set up and measure the flatness of a surface; and,
d. Set up and measure perpendicularity, angularity, and parallelism tolerances.

Instructional Materials:

12 x 12 granite surface plate
3 x 3 x 3 angle plates
1 1/4 Vee blocks
3 x 3 x 3 angle plates
Dial indicator .001 discrimination, .125 in. total
Magnetic base indicator holder
Set of steel parallels
Set of adjustable parallels
5.9 x 5.9 45((Max angle) sine plate
Manual for your specific coordinate measuring machine (CMM)
MASTER Handout (LSR-C6-HO)
MASTER Laboratory Exercise (LSR-C6-LE)
MASTER Laboratory Worksheet No. 1 (LSR-C6-LW1)
MASTER Laboratory Worksheet No. 2 (LSR-C6-LW2)
MASTER Laboratory Worksheet No. 3 (LSR-C6-LW3)
MASTER Laboratory Aid (LSR-C6-LA)

Note: The instructor may use his/her own parts for measurement. For example, 10-20 pieces each of:

TRIANGLE prepared per LSR-C6-LW1;
BLOCK1 prepared per LSR-C6-LW2; and,
BLOCK2 prepared per LSR-C6-LW3.

If not practical, a 70-piece model kit containing wood and plastic parts may be purchased. This is available from the Society of Manufacturing Engineers, order code: 2427-2600.

References:

Fundamentals of Dimensional Metrology, Busch, Ted, Delmar Publishing, Latest Edition

Geometric Dimensioning & Tolerancing for Engineering & Manufacturing Technology, Jensen, Cecil, Delmar Publishing, Latest Edition

Fundamentals of Geometric Dimensioning & Tolerancing, Krulikowski, Alex, Delmar Publishing, Latest Edition

Dimensioning and Tolerancing, American Society of Mechanical Engineers, ANSI Y14.5-1994, Latest Edition

Manual for your specific coordinate measuring machine (CMM)

Student Preparation:

Students should have previously completed the following Technical Modules:

LSR-C5 "Use CMM for Location of Features"

Introduction:

The design and manufacturing of today's products requires engineering documentation (i.e., the engineering drawing or blueprint). The drawing contains the views necessary to fully describe the part to be manufactured. Also, and most important, the size of the part including all associated features are documented using dimensions. These dimensions are then used to create the part using the appropriate manufacturing equipment. As products become more complex or require the interchangeablility of parts, the need to further define part drawings is required. The method, known as Geometric Dimensioning and Tolerancing (GD&T) defined not only the dimensions but also the geometric shape of the part with respect to established planes or datums. The GD&T method takes into account the functionality of the part when placed in its assembled state. These GD&T concepts include perpendicularity, parallelism, position, flatness, etc.

In order to maintain quality control and monitor the processes involved with design and manufacturing, part inspection is required. The inspection process ensures dimensional and geometric print compliance as well as statistically monitoring the manufacturing processes. Inspection is part of the overall topic of metrology. Metrology, by definition, includes the fundamental measures of length, time, mass, and temperature. Measurement (mensuration) is that part of metrology which involves the

finding of lengths, areas, and volumes. This data, which is gathered during part inspection, is then used to ensure print compliance and manufacturing consistency.

In this module, the student will become familiar with measurements involving orientation tolerances (perpendicularity, angularity, and parallelism). In addition, the student will perform measurements related to the inspection of flatness of a surface. Coverage includes set-up and use of surface plates, angle plates, sine plates, and v-blocks to obtain the required measurements.

Presentation Outline:

I. Perform Measurements for Orientation Tolerances
   - A. Study and use surface plates
   - B. Study and use angle plates, sine plates, mandrels, and vee blocks
   - C. Set up and measure the flatness of a surface
   - D. Set up and measure the perpendicularity, angularity, and parallelism of two surfaces
   - E. Set up and measure the profile of a surface
   - F. Set up and measure the straightness of a feature

Practical Application:

Students will observe and participate in the discussion of the topics listed above. Following the demonstrations, students will complete measurements using the instruments discussed above and complete LSR-C6-LW1, LSR-C6-LW2, and, LSR-C6-LW3.

Evaluation and/or Verification:

Successful completion of this technical module will be based on the students' successful completion of the following components:

a. Demonstrate an understanding of the use of surface plates;
b. Demonstrate an understanding of the use of angle plates, sine plates, mandrels, and vee blocks;
c. Set up and measure the flatness of a surface;
d. Set up and measure the perpendicularity of two surfaces;
e. Set up and measure the angularity of two surfaces; and,
f. Set up and measure the parallelism of two surfaces.

Summary:

Review the main lesson points using the suggested text(s) listed in the reference section of this module. Hold class discussion and answer student questions.

Next Lesson Assignment:

MASTER Technical Module (LSR-C7) pertaining to measurement by optical comparison.

LSR-C6-HO
Perform Measurements for Orientation Tolerances
Attachment 1: **MASTER** Handout

Objective(s):

Upon completion of this unit the student will be able to:

a. Study and use surface plates;
b. Use angle plates, sine plates, mandrels, and vee blocks;
c. Set up and measure the flatness of a surface; and,
d. Set up and measure perpendicularity, angularity, and parallelism tolerances.

Module Outline:

I. Perform Measurements for Orientation Tolerances
   A. Study and use surface plates
   B. Study and use angle plates, sine plates, mandrels, and vee blocks
   C. Set up and measure the flatness of a surface
   D. Set up and measure the perpendicularity, angularity, and parallelism of two surfaces
   E. Set up and measure the profile of a surface
   F. Set up and measure the straightness of a feature

Successful completion of this technical module will be based on the students' successful completion of the following components:

a. Demonstrate an understanding of the use of surface plates;
b. Demonstrate an understanding of the use of angle plates, sine plates, mandrels, and vee blocks;
c. Set up and measure the flatness of a surface;
d. Set up and measure the perpendicularity of two surfaces;
e. Set up and measure the angularity of two surfaces; and,
f. Set up and measure the parallelism of two surfaces.

Operation Sheet: Triangle

1. Cut .25 x 3.0 steel stock to approx. 5.25 long
2. Mill length of piece to clean only
3. Layout hole locations and slots with vernier height gage
4. Set up a positive stop, establishing datums to the left and at the solid jaw of vise
5. Locate and spot 11 places
6. Locate, drill, and ream .4375 diameter
7. Locate and drill .297 diameter (8) places
8. Locate and ream (8) places
9. Locate, drill, and ream ends of elongated slot
10. Using .250 end mill, rough out center of .375 slot
11. Using saddle dial, progressively mill to first wall
    (First wall is determined by the direction in which backlash has been removed)
12. Mill second wall to complete slot
13. Invert piece and cause to bear against positive stop
14. Repeat operations 5-12
15. Layout 30 degrees
16. Saw piece in two, using caution not to cut into scribe lines
17. Leaving stock for grinding, mill 30-degree angles
18. Finish grind to clean only the largest surfaces (.25 dim.)
19. Grind base of triangle parallel to elongated slot
20. Grind short side perpendicular to Datum -B-
21. Using sine bar and gage blocks, grind 30 degrees
22. Deburr

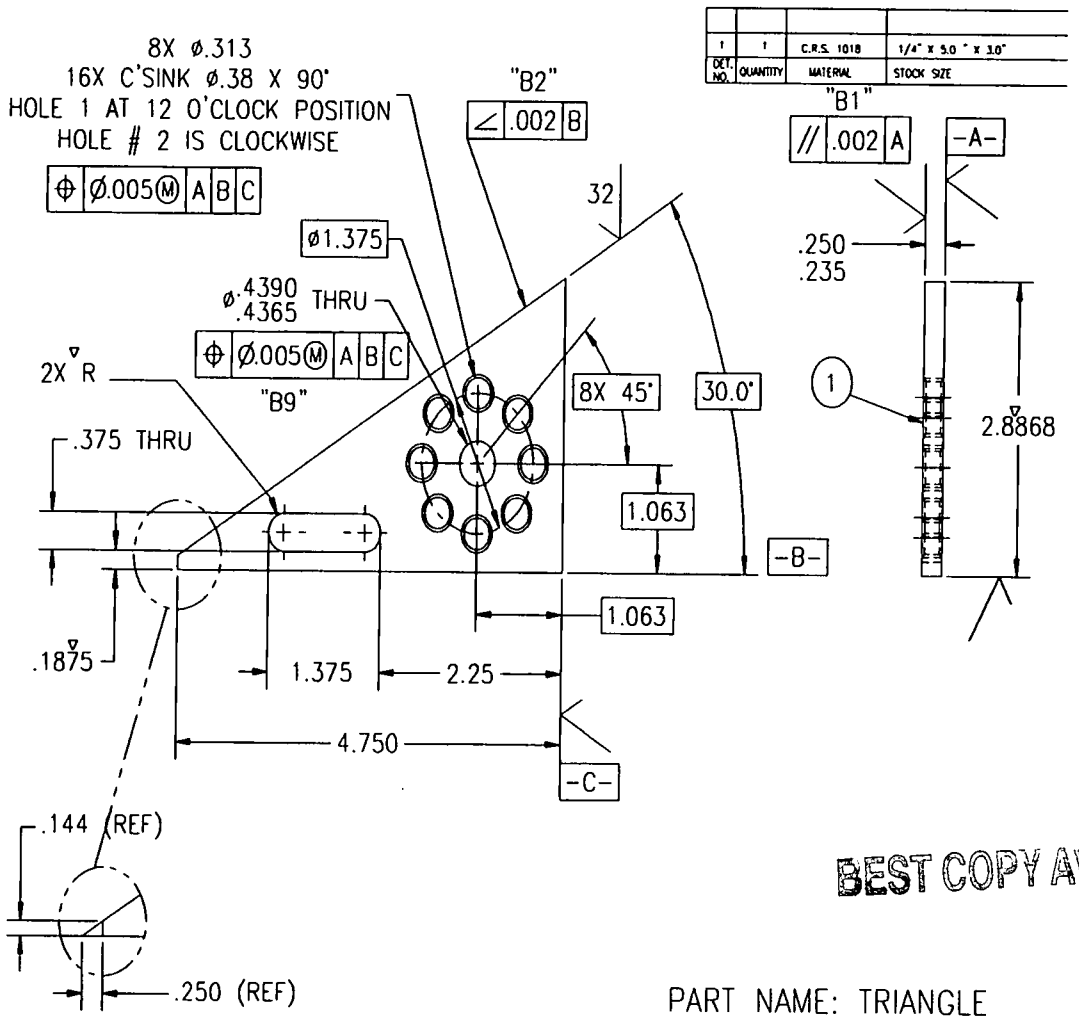

244

BEST COPY AVAILABLE

245

PART NAME: TRIANGLE

Triangle Inspection Sheet

Student Names: _____
_____
_____

B1 (Parallelism) Dim _____
B2 (Angularity) Dim _____
B9 (True Position) Within tolerance? _____

Inspection of 8 holes on 1.375 Dia Bolt Circle

Hole # 1 True Position to Datum A _____ True Position to Datum B _____	Hole # 5 True Position to Datum A _____ True Position to Datum B _____
Hole # 2 True Position to Datum A _____ True Position to Datum B _____	Hole # 6 True Position to Datum A _____ True Position to Datum B _____
Hole # 3 True Position to Datum A _____ True Position to Datum B _____	Hole # 7 True Position to Datum A _____ True Position to Datum B _____
Hole # 4 True Position to Datum A _____ True Position to Datum B _____	Hole # 8 True Position to Datum A _____ True Position to Datum B _____

Block 1 - Operation Sheet

Demos: **Mill block square, edge finder, digital readout, height gage, dial caliper**

1. Mill block square and parallel
2. Layout location for the .750 x .750 slot
   (Use layout dye and height gauge)
3. Use an endmill (smaller than .750 dia.) to pick up the edge of the part, then mill the slot to size

Tools

This is not a complete list but you will need the following tools during the project.

1. Dead blow hammer
2. 6" rule
3. Coolant
4. 6" dial caliper
5. File
6. Square
7. End mills
   Note: Be sure to measure the endmill diameter to determine the proper R.P.M.

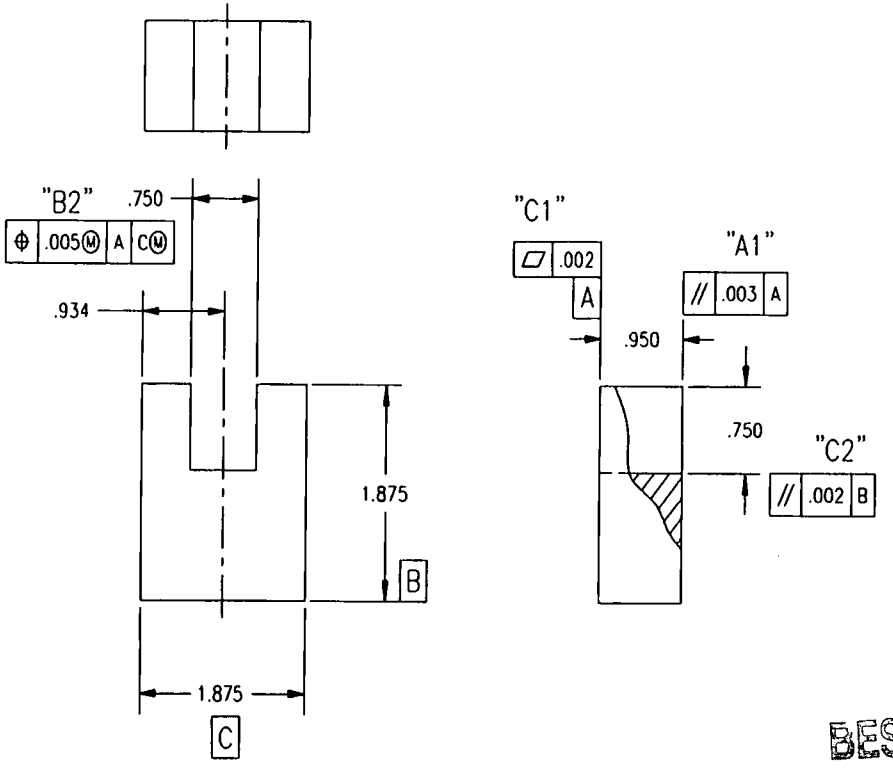

BEST COPY AVAILABLE

243

PART NAME: BLOCK1

Block 1 Inspection Master Sheet

Student Names: _____
_____
_____

Block Serial Number: _____

A1 (Parallelism)_____DIM. _____

B2 (True Position)_____DIM. _____

C1 (Flatness)_____DIM. _____

C2 (Parallelism)_____DIM. _____

Block 2 - Operation Sheet

Demos: Mill block square, edge finder, digital readout, height gage, dial caliper

1. Mill block square and parallel
2. Layout 6x .375 dia. holes
   (Use layout dye and height gauge)
3. Use an edge finder to pick up the edge of the part, then centerdrill all the holes
4. Drill the 6x .375 dia. holes (leave .010 - .015 per surface for finish)
5. Ream the 6x .375 dia. holes to size

Tools

This is not a complete list but you will need the following tools during the project.

1. Dead blow hammer
2. 6" rule
3. Coolant
4. 6" dial caliper
5. File
6. Square
7. Drills - 1/64 smaller than reamed size, center drill, reamers
8. End mills - Be sure to measure the endmill diameter to determine the proper R.P.M.
9. Edge finder - Use 660 R.P.M.

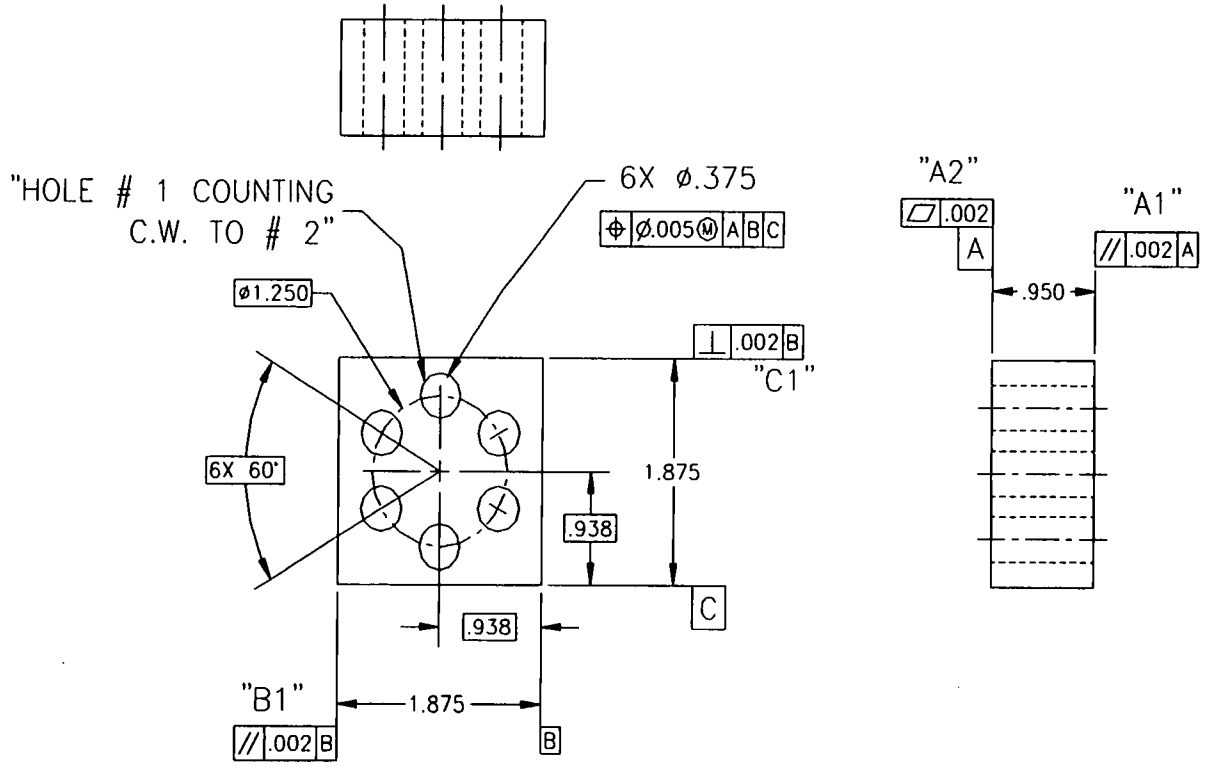

252

253

PART NAME: BLOCK 2

BEST COPY AVAILABLE

Block 2 Inspection Sheet

Student Names: _____
_____
_____

Block 2 Serial Number _____

A1 (Parallelism) _____ DIM._____

A2 (Flatness) _____ DIM._____

B1 (Parallelism) _____ DIM._____

C1(Perpendicularity) _____ DIM._____

True Position tolerances of 6 holes on 1.25 dia bolt circle

Hole # 1 True Position to Datum B _____ True Position to Datum C _____	Hole # 5 True Position to Datum B _____ True Position to Datum C _____
Hole # 2 True Position to Datum B _____ True Position to Datum C _____	Hole # 6 True Position to Datum B _____ True Position to Datum C _____
Hole # 3 True Position to Datum B _____ True Position to Datum C _____	Hole # 7 True Position to Datum B _____ True Position to Datum C _____
Hole # 4 True Position to Datum B _____ True Position to Datum C _____	Hole # 8 True Position to Datum B _____ True Position to Datum C _____

Rules of Conduct

1. Absolutely no horseplay or practical joking will be tolerated.
2. Do not talk to anyone who is operating a machine.
3. Walk only in the designated traffic lanes.
4. Dress appropriately; at the absolute minimum, you must have:
   a. No loose clothing, including ties;
   b. Long hair properly stowed;
   c. No jewelry;
   d. Hard, closed-toe shoes;
   e. Eye protection (safety glasses); and,
   f. Ear protection (plugs or headset).
5. Follow all institutional safety rules.

LASER MACHINING SERIES

MASTER Technical Module No. LSR-C7

Subject: Laser Machining **Time: 10 Hrs.**

Duty: Perform Measurement and Inspection
Task: Perform Measurement by Optical Comparison

Objective(s):

Upon completion of this unit the student will be able to:

a. Study and use an optical comparator;
b. Create charts from CAD systems to use as overlays;
c. Determine the scaling principle used in optical comparison;
d. Assess the accuracy of an optical comparator;
e. Set up and measure the profile of a line; and,
f. Set up and measure the profile of a surface.

Instructional Materials:

Profile projector, twelve-inch screen.
MASTER Handout (LSR-C7-HO)
MASTER Laboratory Exercise (LSR-C7-LE)
MASTER Laboratory Worksheet No. 1 (LSR-C7-LW1)
MASTER Laboratory Worksheet No. 2 (LSR-C7-LW2)
MASTER Laboratory Aid (LSR-C7-LA)

Note: The instructor may use his/her own parts for measurement. For example, 10-20 pieces of part shown in LSR-C6-LW1, prepared per LSR-C5-LW2. If not practical, a 70-piece model kit containing wood and plastic parts may be purchased. This is available from the Society of Manufacturing Engineers, order code: 2427-2600.

References:

Fundamentals of Dimensional Metrology, Busch, Ted, Delmar Publishing, Latest Edition
Geometric Dimensioning & Tolerancing for Engineering & Manufacturing Technology, Jensen, Cecil, Delmar Publishing, Latest Edition
Fundamentals of Geometric Dimensioning & Tolerancing, Krulikowski, Alex, Delmar Publishing, Latest Edition

Dimensioning and Tolerancing, American Society of Mechanical Engineers, ANSI Y14.5-1994, Latest Edition

Student Preparation:

Students should have previously completed the following Technical Modules:
LSR-C6 "Perform Measurements for Orientation Tolerances"

Introduction:

The design and manufacturing of today's products requires engineering documentation (i.e., the engineering drawing or blueprint). The drawing contains the views necessary to fully describe the part to be manufactured. Also, and most important, the size of the part including all associated features are documented using dimensions. These dimensions are then used to create the part using the appropriate manufacturing equipment. As products become more complex or require the interchangeablility of parts, the need to further define part drawings is required. The method, known as Geometric Dimensioning and Tolerancing (GD&T) defined not only the dimensions but also the geometric shape of the part with respect to established planes or datums. The GD&T method takes into account the functionality of the part when placed in its assembled state. These GD&T concepts include perpendicularity, parallelism, position, flatness, etc.

In order to maintain quality control and monitor the processes involved with design and manufacturing, part inspection is required. The inspection process ensures dimensional and geometric print compliance as well as statistically monitoring the manufacturing processes. Inspection is part of the overall topic of metrology. Metrology, by definition, includes the fundamental measures of length, time, mass, and temperature. Measurement (mensuration) is that part of metrology which involves the finding of lengths, areas, and volumes. This data, which is gathered during part inspection, is then used to ensure print compliance and manufacturing consistency.

In this module, the student will become familiar with optical comparators and how they are used to measure profile tolerances. The student will become familiar with using CAD to create overlays of profiles to facilitate the measurement process. Coverage includes a study of the scaling principles used for overlay creation.

Presentation Outline:

I. Perform Measurement by Optical Comparison
   - A. Study and use an optical comparator
   - B. Create charts from CAD systems to use as overlays
   - C. Determine the scaling principle used in optical comparison
   - D. Assess the accuracy of an optical comparator

E. Set up and measure the profile of a line
F. Set up and measure the profile of a surface

Practical Application:

Students will observe and participate in the discussion of the topics listed above. Following the demonstrations, students will prepare the inspection overlay per LSR-C7-LW1 using AutoCAD or other CAD system. The students will then complete LSR-C7-LW2 using the optical comparator. The students should record the part serial number and profile tolerance on the lab sheet.

Evaluation and/or Verification:

Successful completion of this technical module will be based on the students' successful completion of the following components:

a. Demonstrate an understanding of the use of an optical comparator;
b. Demonstrate how to create charts from CAD systems to use as overlays;
c. Determine the scaling principle used in optical comparison;
d. Demonstrate an understanding of the accuracy of an optical comparator; and,
e. Set up and measure the profile of a line and surface.

Summary:

Review the main lesson points using the suggested text(s) listed in the reference section of this module. Hold class discussion and answer student questions.

Next Lesson Assignment:

MASTER Technical Module (LSR-C8) pertaining to performing measurements for circularity, concentricity, runout, and straightness tolerances.

LSR-C7-HO
Perform Measurement by Optical Comparison
Attachment 1: MASTER Handout

Objective(s):

Upon completion of this unit the student will be able to:

a. Study and use an optical comparator;
b. Create charts from CAD systems to use as overlays;
c. Determine the scaling principle used in optical comparison;
d. Assess the accuracy of an optical comparator;
e. Set up and measure the profile of a line; and,
f. Set up and measure the profile of a surface.

Module Outline:

I. Perform Measurement by Optical Comparison
   A. Study and use an optical comparator
   B. Create charts from CAD systems to use as overlays
   C. Determine the scaling principle used in optical comparison
   D. Assess the accuracy of an optical comparator
   E. Set up and measure the profile of a line
   F. Set up and measure the profile of a surface

Successful completion of this technical module will be based on the students' successful completion of the following components:

a. Demonstrate an understanding of the use of an optical comparator;
b. Demonstrate how to create charts from CAD systems to use as overlays;
c. Determine the scaling principle used in optical comparison;
d. Demonstrate an understanding of the accuracy of an optical comparator; and,
e. Set up and measure the profile of a line and surface.

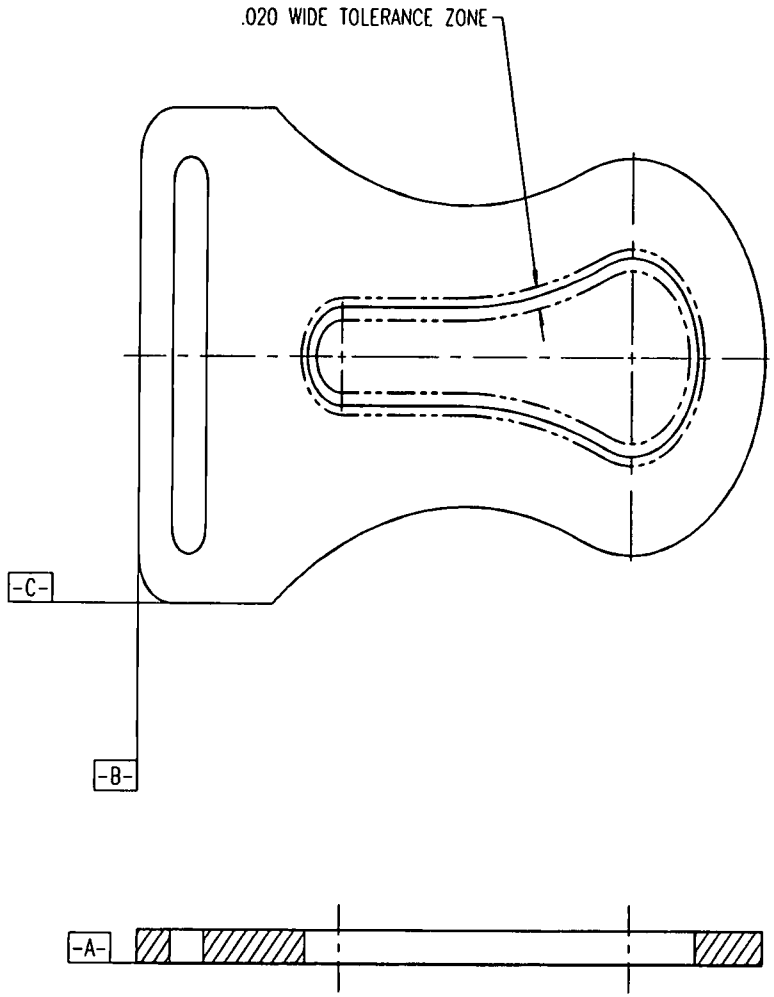
.020 WIDE TOLERANCE ZONE
-C-
-B-
-A-

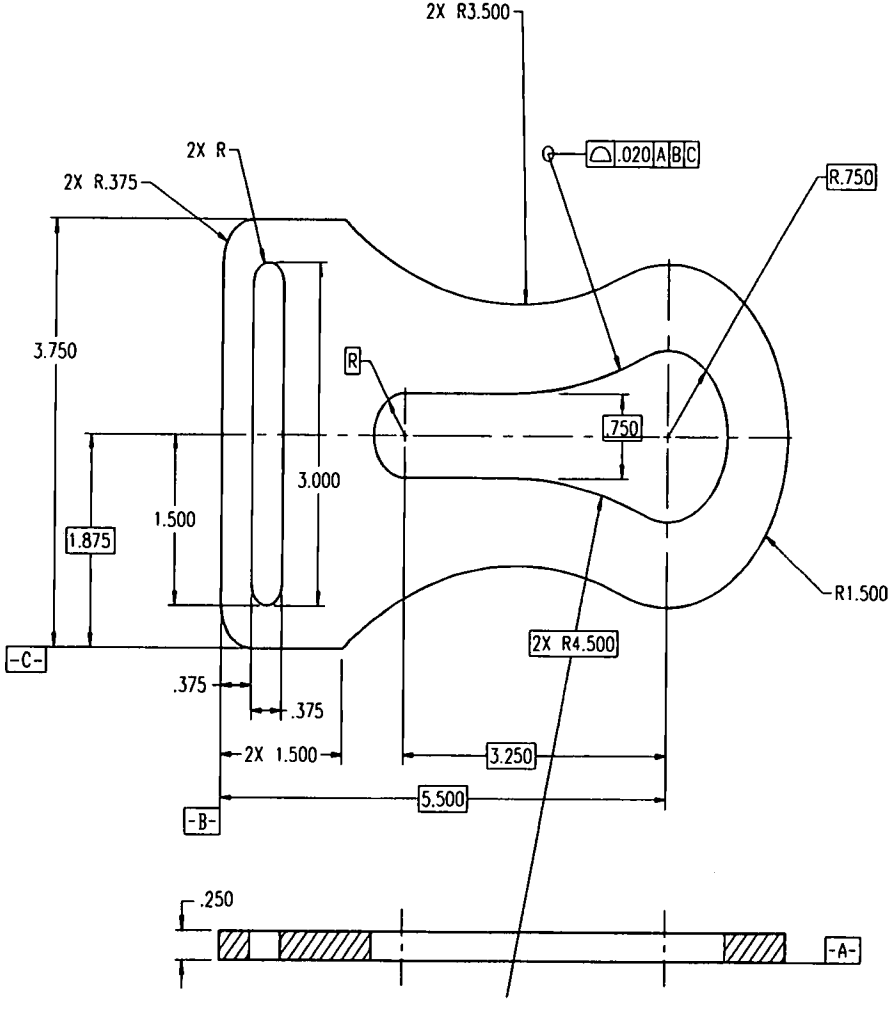
2X R3.500
2X R
2X R.375
.020 A B C
R.750
3.750
R
.750
3.000
1.500
1.875
R1.500
-C-
2X R4.500
.375
.375
2X 1.500
3.250
5.500
-B-
.250
-A-

Rules of Conduct

1. Absolutely no horseplay or practical joking will be tolerated.
2. Do not talk to anyone who is operating a machine.
3. Walk only in the designated traffic lanes.
4. Dress appropriately; at the absolute minimum, you must have:
   a. No loose clothing, including ties;
   b. Long hair properly stowed;
   c. No jewelry;
   d. Hard, closed-toe shoes;
   e. Eye protection (safety glasses); and,
   f. Ear protection (plugs or headset).
5. Follow all institutional safety rules.

LASER MACHINING SERIES

MASTER Technical Module No. LSR-C8

Subject: Laser Machining **Time: 10 Hrs.**

Duty: Perform Measurement and Inspection
Task: Perform Measurements for Circularity, Concentricity, Runout, and Straightness Tolerances

Objective(s):

Upon completion of this unit the student will be able to:

a. Set up and measure the circularity of round features;
b. Set up and measure the runout and total runout of round features;
c. Set up and measure the straightness of a feature; and,
d. Set up and measure two features for coplanarity, concentricity, or coaxility.

Instructional Materials:

12 x 12 Granite surface plate
1 1/4 Vee bocks
Dial indicator .001 discrimination, .125 in. total
Magnetic base indicator holder
MASTER Handout (LSR-C8-HO)
MASTER Laboratory Exercise (LSR-C8-LE)
MASTER Laboratory Worksheet No. 1 (LSR-C8-LW1)
MASTER Laboratory Worksheet No. 2 (LSR-C8-LW2)
MASTER Laboratory Aid (LSR-C8-LA)

Note: The instructor may use his/her own parts for measurement. For example, 10-20 pieces each of:

BUSHING prepared per LSR-C8-LW1
THREE-STEP SHAFT prepared per LSR-C8-LW2

If not practical, a 70-piece model kit containing wood and plastic parts may be purchased. This is available from the Society of Manufacturing Engineers, order code: 2427-2600.

References:

Fundamentals of Dimensional Metrology, Busch, Ted, Delmar Publishing, Latest Edition

Geometric Dimensioning & Tolerancing for Engineering & Manufacturing Technology, Jensen, Cecil, Delmar Publishing, Latest Edition

Fundamentals of Geometric Dimensioning & Tolerancing, Krulikowski, Alex, Delmar Publishing, Latest Edition

Dimensioning and Tolerancing, American Society of Mechanical Engineers, ANSI Y14.5-1994, Latest Edition

Student Preparation:

Students should have previously completed the following Technical Modules:
LSR-C7 "Perform Measurements by Optical Comparison"

Introduction:

The design and manufacturing of today's products requires engineering documentation (i.e., the engineering drawing or blueprint). The drawing contains the views necessary to fully describe the part to be manufactured. Also, and most important, the size of the part including all associated features are documented using dimensions. These dimensions are then used to create the part using the appropriate manufacturing equipment. As products become more complex or require the interchangeablility of parts, the need to further define part drawings is required. The method, known as Geometric Dimensioning and Tolerancing (GD&T) defined not only the dimensions but also the geometric shape of the part with respect to established planes or datums. The GD&T method takes into account the functionality of the part when placed in its assembled state. These GD&T concepts include perpendicularity, parallelism, position, flatness, etc.

In order to maintain quality control and monitor the processes involved with design and manufacturing, part inspection is required. The inspection process ensures dimensional and geometric print compliance as well as statistically monitoring the manufacturing processes. Inspection is part of the overall topic of metrology. Metrology, by definition, includes the fundamental measures of length, time, mass, and temperature. Measurement (mensuration) is that part of metrology which involves the finding of lengths, areas, and volumes. This data, which is gathered during part inspection, is then used to ensure print compliance and manufacturing consistency.

In this module, the student will become familiar with measurements for round features including circularity, runout, and concentricity. In addition, the student will perform straightness measurements as related to the form of line.

Presentation Outline:

I. Perform Measurements for Circularity, Concentricity, Runout, and Straightness Tolerances
   A. Set up and measure the circularity of round features
   B. Set up and measure the runout and total runout of round features
   C. Set up and measure the straightness of a feature
   D. Set up and measure two features for coplanarity, concentricity, or coaxility

Practical Application:

Students will observe and participate in the discussion of the topics listed above. Following the demonstrations, students will complete measurements using the instruments discussed above and complete LSR-C8-LW1 and LSR-C8-LW2.

Evaluation and/or Verification:

Successful completion of this technical module will be based on the students' successful completion of the following components:

a. Set up and measure the circularity of round features;
b. Set up and measure the runout and total runout of round features;
c. Set up and measure the straightness of a feature; and,
d. Set up and measure two features for coplanarity, concentricity, or coaxility.

Summary:

Review the main lesson points using the suggested text(s) listed in the reference section of this module. Hold class discussion and answer student questions.

Next Lesson Assignment:

MASTER Technical Module (LSR-C9) pertaining to advanced metrology topics.

LSR-C8-HO

Perform Measurements for Circularity, Concentricity, Runout, and Straightness Tolerances

Attachment 1: **MASTER** Handout

Objective(s):

Upon completion of this unit the student will be able to:

a. Set up and measure the circularity of round features;
b. Set up and measure the runout and total runout of round features;
c. Set up and measure the straightness of a feature; and,
d. Set up and measure two features for coplanarity, concentricity, or coaxility.

Module Outline:

I. Perform Measurements for Circularity, Concentricity, Runout, and Straightness Tolerances
   A. Set up and measure the circularity of round features
   B. Set up and measure the runout and total runout of round features
   C. Set up and measure the straightness of a feature
   D. Set up and measure two features for coplanarity, concentricity, or coaxility

LSR-C8-LE
Perform Measurements for Circularity, Concentricity, Runout, and Straightness Tolerances
Attachment 2: **MASTER** Laboratory Exercise

Successful completion of this technical module will be based on the students' successful completion of the following components:

a. Set up and measure the circularity of round features;
b. Set up and measure the runout and total runout of round features;
c. Set up and measure the straightness of a feature; and,
d. Set up and measure two features for coplanarity, concentricity, or coaxility.

Operation Sheet for Bushing

1. Start with stock: 3.00 dia with a length greater than 2.50.
2. Tighten stock in lathe chuck with the part tight against the back of the chuck. (The diameter is too large to fit through the chuck center so push the part in as far as possible.)
3.* Face to clean (remove just enough stock to clean end the part). ***Caution: You must take very small cuts (.015 max!).***
4.* Center drill (#4 center drill) to 3\16 dia.
5.* Turn the 2.950 diameter length to 2.50 length.
6.* Turn the 1.5 diameter to 2.125 length. (Stay about .010-.020 off the face and .030 oversize on the dia. You are looking for a size of about 1.530 dia. x 1.115 length.)
7.* Face and turn the 1.500 dia. x 2.125 length to size.
8.* Step drill the .750 hole first using a .500 dia. drill followed by the .750 dia. drill.
9. Using the parting tool, square the tool to the front of the chuck to assure squareness. Set the RPM to 110 and manually cut off the part to a length of 2.625. (***This is .125 longer than the total length of the part. Make sure the right side of the blade is set to 2.625!***)
10.* Place the 2.125 x 1.500 dia. in the chuck and face the part to the 2.500 length.
11.* Set up your facing tool for we will use the facing tool to make the 1.500 dia. x .125 counterbore.

* ***Means calculate rpm for these steps.***

Tools Required

1. 2 OD. Mic.
2. 6 in. rule
3. #4 center drill
4. Lathe facing tool
5. Right hand lathe turning tool
6. Allen wrench set
7. Rags from crib
8. Coolant

Speed Rpm

Spindle speed is calculated from the formula:
RPM = cutting speed * (4) / dia of work
cutting speed = surface feet per min.
S.F.M. for aluminum = 600

Feed Rate

Rough turning .096 i.p.r. finish turning .006 i.p.r.

Depth of Cut

Rough cut .070 max

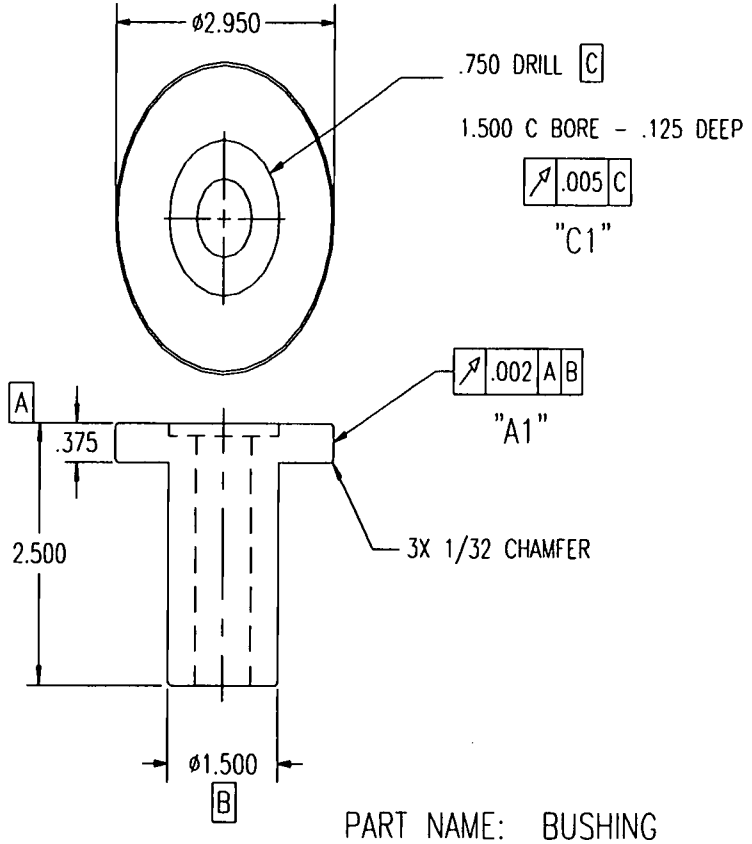

PART NAME: BUSHING

Bushing Inspection Sheet

Student Names: _____
_____
_____

Bushing Serial Number _____

Runout Tolerance: "A1"_____ Dim. _____

Runout Tolerance: "C1"_____ Dim. _____

Operation Sheet for Three-step Shaft

1. Start with stock 1.500 in diameter with sufficient length.
2. Tighten part in lathe chuck with the part tight against the back of the chuck. (The diameter is too large to fit through the chuck center so push the part in as far as possible.)
3.* Face to clean.
   Caution: The part will be sticking out of the chuck by almost 4.5 inches! You must take very small cuts (.015 max!).
4.* Center drill (#4 center drill) to 3\16 dia.
5.* Remove from lathe, turn part end for end, tighten part in lathe chuck. Face part to 5" dimension.
   Caution: The part will be sticking out of the chuck by almost 4.5 inches! You must take very small cuts (.015 max!).
6.* Center drill to 3\16 dia.
7. Support right side of part with live center.
8. ***Note : Measure 3.5 in. For first cut termination, rotate chuck by hand to insure no interference with tool bit!)***
9.* Take a trial cut. Measure part on both ends to check for taper.
10.* Turn 1.375 dia.
11. Check dimensions.
12.** Turn 1.250 diameter.
13. Check dimensions.
14.** Turn 1.125 diameter.
15. Check dimensions.

* Means calculate rpm for these steps.
** Means use same rpm for remaining steps

Tools Required

1. 1-2 OD. Mic.
2. 6 in. rule
3. #4 center drill
4. Lathe facing tool
5. Right hand lathe turning tool
6. Allen wrench set
7. Rags from crib

8. Coolant

Speed Rpm

Spindle speed is calculated from the formula:
RPM = cutting speed * (4) / dia of work
cutting speed = surface feet per min.
S.F.M. for aluminum = 600

Feed Rate

Rough turning .096 i.p.r. finish turning .006 i.p.r.
Depth of cut **Rough** cut .070 max

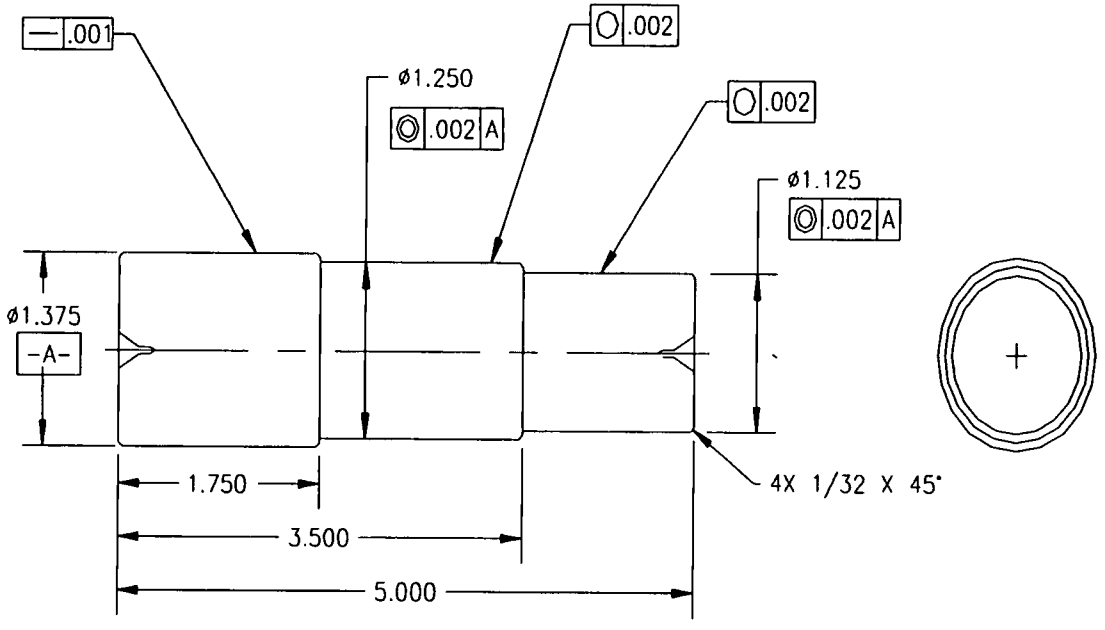

PART NAME: THREE-STEP SHAFT

NOTE: UOS ALL DIMENSIONS ARE
TO BE ±.005

273

273

Three-Step Shaft Inspection Sheet

Student Names: _____
_____
_____

Shaft Serial Number _____

1.375 Dia: Straightness Tolerance _____

1.250 Dia: Roundness Tolerance _____
Circularity Tolerance _____

1.125 Dia: Roundness Tolerance _____
Circularity Tolerance _____

ERIC

Rules of Conduct

1. Absolutely no horseplay or practical joking will be tolerated.
2. Do not talk to anyone who is operating a machine.
3. Walk only in the designated traffic lanes.
4. Dress appropriately; at the absolute minimum, you must have:
   a. No loose clothing, including ties;
   b. Long hair properly stowed;
   c. No jewelry;
   d. Hard, closed-toe shoes;
   e. Eye protection (safety glasses); and,
   f. Ear protection (plugs or headset).
5. Follow all institutional safety rules.

LASER MACHINING SERIES

MASTER Technical Module No. LSR-C9

Subject: Laser Machining **Time: 5 Hrs.**

Duty: Perform Measurement and Inspection
Task: Investigate Advanced Metrology Topics

Objective(s):

Upon completion of this unit the student will be able to:

a. Discuss the purpose and applications of laser measurement;
b. Set up and use a laser measurement device;
c. Assess how ISO 9000 affects metrology; and,
d. Study the fundamentals of statistical process control (SPC).

Instructional Materials:

Bench top laser scan micrometer
No. 739 SPC plus II Software
486 DX2 66MHz computer or better
MASTER Handout (LSR-C9-HO)
MASTER Laboratory Exercise (LSR-C9-LE)
MASTER Laboratory Aid (LSR-C9-LA)

Note: Unless the above items can be used in future applications beyond this module, the MASTER consortia do not recommend purchasing. Students can be exposed to the subjects above through local field trips, vendor demonstrations, or video series.

References:

Fundamentals of Dimensional Metrology, Busch, Ted, Delmar Publishing, Latest Edition
Manufacturing Engineering and Technology, Kalpakjian, Serope, Adison-Wesley Publishing Co., Latest Edition

Student Preparation:

Students should have previously completed the following Technical Modules:

LSR-C8 "Perform Measurements for Circularity, Concentricity, Runout, and Straightness Tolerances"

Introduction:

The design and manufacturing of today's products requires engineering documentation (i.e., the engineering drawing or blueprint). The drawing contains the views necessary to fully describe the part to be manufactured. Also, and most important, the size of the part including all associated features are documented using dimensions. These dimensions are then used to create the part using the appropriate manufacturing equipment. As products become more complex or require the interchangeablility of parts, the need to further define part drawings is required. The method, known as Geometric Dimensioning and Tolerancing (GD&T) defined not only the dimensions but also the geometric shape of the part with respect to established planes or datums. The GD&T method takes into account the functionality of the part when placed in its assembled state. These GD&T concepts include perpendicularity, parallelism, position, flatness, etc.

In order to maintain quality control and monitor the processes involved with design and manufacturing, part inspection is required. The inspection process ensures dimensional and geometric print compliance as well as statistically monitoring the manufacturing processes. Inspection is part of the overall topic of metrology. Metrology, by definition, includes the fundamental measures of length, time, mass, and temperature. Measurement (mensuration) is that part of metrology which involves the finding of lengths, areas, and volumes. This data, which is gathered during part inspection, is then used to ensure print compliance and manufacturing consistency.

In this module, the student will become familiar with some advanced topics in metrology including applications of lasers (laser scan micrometers offer accuracy to five (5) decimal places). In addition, the student will be introduced to the ISO 9000 quality standards in which statistical concepts plays a key role.

Presentation Outline:

I. Investigate Advanced Metrology Topics
   - A. Discuss the purpose and applications of laser measurement
   - B. Set up and use a laser measurement device
   - C. Assess how ISO 9000 affects metrology
   - D. Study the fundamentals of statistical process control

Practical Application:

Students will observe and participate in the discussion of the topics listed above. Following the demonstrations, students will complete measurements using the laser instrument discussed above (if practical). The instructor may use his/her own parts for measurement. If not practical, a 70-piece model kit containing wood and plastic parts

may be purchased. This is available from the Society of Manufacturing Engineers, order code: 2427-2600.

Evaluation and/or Verification:

Successful completion of this technical module will be based on the students' successful completion of the following components:

a. Demonstrate an understanding of the applications of laser measurement;
b. Set up and use a laser measurement device;
c. Discuss how ISO 9000 affects metrology; and,
d. Demonstrate an understanding of the fundamentals of statistical process control.

Summary:

Review the main lesson points using the suggested text(s) listed in the reference section of this module. Hold class discussion and answer student questions.

Next Lesson Assignment:

MASTER Technical Module (LSR-D1) dealing with performing DC voltage, current, and power measurements.

LSR-C9-HO
Investigate Advanced Metrology Topics
Attachment 1: **MASTER** Handout

Objective(s):

Upon completion of this unit the student will be able to:

a. Discuss the purpose and applications of laser measurement;
b. Set up and use a laser measurement device;
c. Assess how ISO 9000 affects metrology; and,
d. Study the fundamentals of statistical process control (SPC).

Module Outline:

I. Investigate Advanced Metrology Topics
   A. Discuss the purpose and applications of laser measurement
   B. Set up and use a laser measurement device
   C. Assess how ISO 9000 affects metrology
   D. Study the fundamentals of statistical process control

Successful completion of this technical module will be based on the students' successful completion of the following components:

a. Demonstrate an understanding of the applications of laser measurement;
b. Set up and use a laser measurement device;
c. Discuss how ISO 9000 affects metrology; and,
d. Demonstrate an understanding of the fundamentals of statistical process control.

Rules of Conduct

1. Absolutely no horseplay or practical joking will be tolerated.
2. Do not talk to anyone who is operating a machine.
3. Walk only in the designated traffic lanes.
4. Dress appropriately; at the absolute minimum, you must have:
   a. No loose clothing, including ties;
   b. Long hair properly stowed;
   c. No jewelry;
   d. Hard, closed-toe shoes;
   e. Eye protection (safety glasses); and,
   f. Ear protection (plugs or headset).
5. Follow all institutional safety rules.

Laser Machinist .... apply the principles of electronics, lasers, optics, materials, engineering documentation, CAD/CAM, and systems integration to manufacture products following current industry and company standards.

Duties	Tasks												
A Practice Laser Safety	A-1 Discuss laser safety standards	A-2 Discuss basic laser principles	A-3 Discuss laser hazards	A-4 Discuss control measures									
B Apply Mathematical Concepts	B-1 Perform basic mathematical functions	B-2 Perform algebraic functions	B-3 Study exponents and right triangle geometry	B-4 Study elements of plane and solid geometry	B-5 Perform data evaluation and statistical analysis	B-6 Perform proportioning and interpolation	B-7 Perform basic trigonometric calculations	B-8 Investigate vectors and vector systems	B-9 Investigate the Cartesian Coordiante System				
C Perform Measurement and Inspection	C-1 Study basics of metrology	C-2 Select instruments used for measurement	C-3 Study datums and the three plane concept	C-4 Select gauging tools	C-5 Use CMM for location of features	C-6 Perform measurements for orientation tolerances	C-7 Perform measurment by optical comparison	C-8 Perform measurements for circularity, concentricity, runout, and straightness tolerances	C-9 Investigate advanced metrology topics				
D Troubleshoot Industrial Electronics and Control	D-1 Perform DC voltage, current, and power measurements	D-2 Perform AC voltage, current, and power measurements	D-3 Investigate digital logic systems	D-4 Investigate diode applications	D-5 Investigate transistors and thyristors	D-6 Investigate operational amplifiers	D-7 Investigate power supply circuits						
E Apply Concepts of Modern Optics	E-1 Study reflection and refraction at plane surfaces	E-2 Perform imaging with a single lens	E-3 Perform imaging with multiple lenses	E-4 Study F-stops and apertures	E-5 Use laser beam-expanding collimators	E-6 Study interference	E-7 Study diffraction	E-8 Study polarization	E-9 Investigate radiometry and photometry				
F Perform CNC Machining	F-1 Apply machine specific nomenclature and terminology	F-2 Investigate the Cartesian coordinate system as applied to a CNC mill or laser	F-3 Apply CNC programming language	F-4 Perform start up, tool changing, and ending of programs	F-5 Perform positioning and basic drilling	F-8 Create a sub-program	F-7 Perform contouring	F-8 Apply tool radius compensation	F-9 Perform program preparation	F-10 Apply special laser coding parameters			
G Investigate Industrial Laser Systems	G-1 Review characteristics of light	G-2 Investigate emission and absorption of light	G-3 Discuss optical cavities and laser modes	G-4 Discuss temporal characteristics of lasers	G-5 Investigate spatial characteristics of lasers	G-6 Discuss laser classifications and characteristics							
H Perform Computer-Aided Drafting (CAD)	H-1 Discuss and understand PC basics	H-2 Discuss CAD basics and file management	H-3 Use drawing settings	H-4 Perform basic editing commands	H-5 Create drawings with accuracy	H-6 Organize drawing information	H-7 Control the display of drawings	H-8 Use intermediate drawing commands	H-9 Perform intermediate editing commands	H-10 Create multi view drawings	H-11 Create sectioned drawings	H-12 Investigate basic dimensioning	H-13 Perform advanced dimensioning
	H-14 Use and manipulate blocks	H-15 Use blocks to automate the drawing process											
I Perform Laser Materials Processing	I-1 Review laser safety standards	I-2 Discuss lasers used for materials processing	I-3 Discuss laser optics and beam characteristics	I-4 Investigate absorption of laser energy	I-5 Use lasers for welding and surface treatment	I-6 Use lasers for material removal							
J Perform Computer-Aided Manufacturing (CAM)	J-1 Discuss and understand the basics of a PC based CAM system	J-2 Discuss basic CAM operations	J-3 Set up cutting tools	J-4 Create simple part profiles	J-5 Create and edit complex part profiles	J-6 Perform roughing, drilling, and counterboring	J-7 Advanced editing of part profiles	J-8 Edit tool paths	J-9 Use construction layers in SmartCAM	J-10 Perform user commands and machine events	J-11 Create families of parts	J-12 Perform CAD/CAM integration	J-13 Perform code generation

LSR PM4
040998

BEST COPY AVAILABLE

283

LASER MACHINING SERIES

MASTER Technical Module No. LSR-D1

Subject: Laser Machining **Time: 15 Hrs.**

Duty: Troubleshoot Industrial Electronics and Controls
Task: Perform DC Voltage, Current, and Power Measurements

Objective(s):

Upon completion of this unit the student will be able to analyze DC circuits, including:

a. Identifying components, quantities, and units;
b. Determining resistance using color code;
c. Demonstrating an understanding of DC voltage and current;
d. Demonstrating an understanding of power and energy;
e. Analyzing series, parallel and series-parallel circuits;
f. Performing voltage, current, and power measurements; and,
g. Troubleshooting basic DC circuits.

Instructional Materials:

MASTER Handout (LSR-D1-HO)
MASTER Laboratory Exercise (LSR-D1-LE)

References:

Principles of Electric Circuits, Floyd, Prentice Hall, Latest Edition
Experiments in Electric Circuits, Stanley, Merrill Publishing, Latest Edition
Electronic Workbench circuit simulation software, Latest Edition

Student Preparation:

Students should have previously completed the following Technical Modules:

LSR-A1 through LSR-A4 "Practice Laser Safety"
LSR-B1 through LSR-B9 "Apply Mathematical Concepts"

Introduction:

A fundamental understanding of DC and AC circuit theory as well as analog and digital electronics is essential for any individual working in today's technological world. All industrial laser systems employ electronics in the generation of laser light.

Electronics is used in power supplies for generating the energy required for pumping the active medium, for controlling components in the laser cavity such as Q-switches, shutters, and power monitoring, in the safety and interlock systems employed, in motion control as well as parts handing in automated systems. In this module, we will study DC circuit theory to provide a basic understanding of circuit concepts and measurement techniques.

Presentation Outline:

I. Perform DC Voltage, Current and Power Measurements
   - A. Identify components, quantities, and units
     1. Discuss components and measuring instruments
     2. Discuss electrical and magnetic units
     3. Use Metric prefixes
     4. Perform metric conversions
   - B. Determine resistance using color code
   - C. Demonstrate an understanding of DC voltage and current.
     1. Calculate current, voltage, and resistance using Ohm's Law
   - D. Demonstrate an understanding of power and energy
     1. Calculate power in a circuit
     2. Determine resistor power ratings
     3. Discuss basic power supplies
   - E. Analyze series, parallel and series-parallel circuits
     1. Calculate voltage, current and power in a series circuit
     2. Calculate voltage, current and power in a parallel circuit
     3. Calculate voltage, current and power in a series-parallel circuit
   - F. Perform voltage, current, and power measurements
     1. Measure voltage, current and power in a series circuit
     2. Measure voltage, current and power in a parallel circuit
     3. Measure voltage, current and power in a series-parallel circuit
     4. Discuss loading effects in a voltmeter
   - G. Troubleshoot basic DC circuits
     1. Check for open circuits
     2. Check for short circuits

Practical Application:

Perform selected experiments in Part I: DC Experiments section of ***Experiments in Electric Circuits,*** Stanley, Merrill Publishing, Latest Edition.

Evaluation and/or Verification:

Successful completion of this technical module will be based on the students' successful completion of the following components:

I. Perform DC voltage, current and power measurements;
   A. Identify components, quantities, and units;
      1. Discuss components and measuring instruments;
      2. Discuss electrical and magnetic units;
      3. Use Metric prefixes;
      4. Perform metric conversions;
   B. Determine resistance using color code;
   C. Demonstrate an understanding of DC voltage and current;
      1. Calculate current, voltage, and resistance using Ohm's Law;
   D. Demonstrate an understanding of power and energy;
      1. Calculate power in a circuit;
      2. Determine resistor power ratings;
      3. Discuss basic power supplies;
   E. Analyze series, parallel and series-parallel circuits;
      1. Calculate voltage, current and power in a series circuit;
      2. Calculate voltage, current and power in a parallel circuit;
      3. Calculate voltage, current and power in a series-parallel circuit;
   F. Perform voltage, current, and power measurements;
      1. Measure voltage, current and power in a series circuit;
      2. Measure voltage, current and power in a parallel circuit;
      3. Measure voltage, current and power in a series-parallel circuit;
      4. Discuss loading effects in a voltmeter;
   G. Perform troubleshooting of basic DC circuits;
      1. Check for open circuits;
      2. Check for short circuits; and,
   H. Practice and demonstration of skills listed above.

Summary:

Review the main lesson points using the suggested texts listed in the reference section of this module. Hold class discussion and answer student questions.

Next Lesson Assignment:

MASTER Technical Module (LSR-D2) dealing with performing AC voltage, current, and power measurements.

LSR-D1-HO
Perform DC Voltage, Current, and Power Measurements
Attachment 1: **MASTER** Handout

Objective(s):

Upon completion of this unit the student will be able to analyze DC circuits, including:

a. Identifying components, quantities, and units;
b. Determining resistance using color code;
c. Demonstrating an understanding of DC voltage and current;
d. Demonstrating an understanding of power and energy;
e. Analyzing series, parallel and series-parallel circuits;
f. Performing voltage, current, and power measurements; and,
g. Troubleshooting basic DC circuits.

Module Outline:

I. Perform DC Voltage, Current and Power Measurements
  A. Identify components, quantities, and units
    1. Discuss components and measuring instruments
    2. Discuss electrical and magnetic units
    3. Use Metric prefixes
    4. Perform metric conversions
  B. Determine resistance using color code
  C. Demonstrate an understanding of DC voltage and current.
    1. Calculate current, voltage, and resistance using Ohm's Law
  D. Demonstrate an understanding of power and energy
    1. Calculate power in a circuit
    2. Determine resistor power ratings
    3. Discuss basic power supplies
  E. Analyze series, parallel and series-parallel circuits
    1. Calculate voltage, current and power in a series circuit
    2. Calculate voltage, current and power in a parallel circuit
    3. Calculate voltage, current and power in a series-parallel circuit
  F. Perform voltage, current, and power measurements
    1. Measure voltage, current and power in a series circuit
    2. Measure voltage, current and power in a parallel circuit
    3. Measure voltage, current and power in a series-parallel circuit
    4. Discuss loading effects in a voltmeter
  G. Troubleshoot basic DC circuits
    1. Check for open circuits
    2. Check for short circuits

LSR-D1-LE
Perform DC Voltage, Current, and Power Measurements
Attachment 2: **MASTER** Laboratory Exercise

Successful completion of this technical module will be based on the students' successful completion of the following components:

I. Perform DC voltage, current and power measurements;
   A. Identify components, quantities, and units;
      1. Discuss components and measuring instruments;
      2. Discuss electrical and magnetic units;
      3. Use Metric prefixes;
      4. Perform metric conversions;
   B. Determine resistance using color code;
   C. Demonstrate an understanding of DC voltage and current;
      1. Calculate current, voltage, and resistance using Ohm's Law;
   D. Demonstrate an understanding of power and energy;
      1. Calculate power in a circuit;
      2. Determine resistor power ratings;
      3. Discuss basic power supplies;
   E. Analyze series, parallel and series-parallel circuits;
      1. Calculate voltage, current and power in a series circuit;
      2. Calculate voltage, current and power in a parallel circuit;
      3. Calculate voltage, current and power in a series-parallel circuit;
   F. Perform voltage, current, and power measurements;
      1. Measure voltage, current and power in a series circuit;
      2. Measure voltage, current and power in a parallel circuit;
      3. Measure voltage, current and power in a series-parallel circuit;
      4. Discuss loading effects in a voltmeter;
   G. Perform troubleshooting of basic DC circuits;
      1. Check for open circuits;
      2. Check for short circuits; and,
   H. Practice and demonstration of skills listed above.

LASER MACHINING SERIES

MASTER Technical Module No. LSR-D2

Subject: Laser Machining **Time: 15 Hrs.**

Duty: Troubleshoot Industrial Electronics and Controls
Task: Perform AC Voltage, Current, and Power Measurements

Objective(s):

Upon completion of this unit the student will be able to analyze AC circuits, including:

a. Demonstrating an understanding of sinusoidal voltage and current;
b. Calculating and measuring RMS voltage and current;
c. Measuring AC voltage and current using an oscilloscope;
d. Discussing principles and applications of capacitors;
e. Discussing principles and applications of inductors;
f. Discussing principles and applications of transformers;
g. Troubleshooting RC, RL and RLC circuits; and,
h. Demonstrating and understanding polyphase systems.

Instructional Materials:

MASTER Handout (LSR-D2-HO)
MASTER Laboratory Exercise (LSR-D2-LE)

References:

Principles of Electric Circuits, Floyd, Prentice Hall, Latest Edition
Experiments in Electric Circuits, Stanley, Merrill Publishing, Latest Edition
Electronic Workbench circuit simulation software, Latest Edition

Student Preparation:

Students should have previously completed the following Technical Modules:

LSR-A1 through LSR-A4 "Practice Laser Safety"
LSR-B1 through LSR-B9 "Apply Mathematical Concepts"
LSR-D1 "Perform DC Voltage, Current, and Power Measurements"

Introduction:

A fundamental understanding of DC and AC circuit theory as well as analog and digital electronics is essential for any individual working in today's technological world. All industrial laser systems employ electronics in the generation of laser light. Electronics is used in power supplies for generating the energy required for pumping the active medium, for controlling components in the laser cavity such as Q-switches, shutters, and power monitoring, in the safety and interlock systems employed, in motion control as well as parts handing in automated systems. In this module, we will study AC circuit theory to provide a basic understanding of circuit concepts and measurement techniques.

Presentation Outline:

I. Perform AC Voltage, Current, and Power Measurements
   - A. Demonstrate an understanding of sinusoidal voltage and current
   - B. Demonstrate an understanding of RMS current and voltage
   - C. Measure RMS current and voltage using a digital multimeter
   - D. Measure voltage and current using an oscilloscope
   - E. Discuss principles and applications of capacitors:
     1. Discuss the basic structure and characteristics of capacitors
     2. Discuss various types of capacitors
     3. Analyze series capacitors
     4. Analyze parallel capacitors
     5. Analyze capacitive DC switching circuits
     6. Analyze AC capacitive circuits
     7. Discuss capacitor applications in power supply filters
     8. Perform testing of capacitors
   - F. Discuss principles and applications of inductors:
     1. Discuss the basic structure and characteristics of inductors
     2. Discuss various types of inductors
     3. Analyze series inductors
     4. Analyze parallel inductors
     5. Analyze inductive DC switching circuits
     6. Analyze AC inductive circuits
     7. Discuss inductor applications in power supply filters
     8. Perform testing of inductors
   - G. Discuss principles and applications of transformers
     1. Describe how a transformer is constructed and how it operates
     2. Discuss step-up/step-down transformers
     3. Discuss transformer secondary loading
     4. Discuss reflected loads in transformers
     5. Explain how a transformer is used as an isolation device
     6. Describe practical transformer characteristics

8. Describe center-tapped transformers
9. Describe multiple-winding transformers
10. Describe autotransformers
11. Discuss troubleshooting of transformers

H. Discuss of RC, RL and RLC circuits

I. Discuss polyphase systems
1. Discuss the advantages of polyphase in power applications
2. Analyze three-phase generator configurations
3. Analyze three-phase generators with three-phase loads
4. Discuss power measurements in three-phase systems

Practical Application:

Perform selected experiments in Part II: AC Experiments section of ***Experiments in Electric Circuits,*** Stanley, Merrill Publishing, Latest Edition, using ***Electronic Workbench*** circuit simulation software.

Evaluation and/or Verification:

Successful completion of this technical module will be based on the students' successful completion of the following components:

I. Perform AC Voltage, current, and power measurements;
A. Demonstrate an understanding of sinusoidal voltage and current;
B. Demonstrate an understanding of RMS current and voltage;
C. Measure RMS current and voltage using a digital multimeter;
D. Measure voltage and current using an oscilloscope;
E. Discuss principles and applications of capacitors;
1. Discuss the basic structure and characteristics of capacitors;
2. Discuss various types of capacitors;
3. Analyze series capacitors;
4. Analyze parallel capacitors;
5. Analyze capacitive DC switching circuits;
6. Analyze AC capacitive circuits;
7. Discuss capacitor applications in power supply filters;
8. Perform testing of capacitors;
F. Discuss principles and applications of inductors;
1. Discuss the basic structure and characteristics of inductors;
2. Discuss various types of inductors;
3. Analyze series inductors;
4. Analyze parallel inductors;
5. Analyze inductive DC switching circuits;
6. Analyze AC inductive circuits;
7. Discuss inductor applications in power supply filters;
8. Perform testing of inductors;

G. Discuss principles and applications of transformers;
   1. Describe how a transformer is constructed and how it operates;
   2. Discuss step-up/step-down transformers;
   3. Discuss transformer secondary loading;
   4. Discuss reflected loads in transformers;
   5. Explain how a transformer is used as an isolation device;
   6. Describe practical transformer characteristics;
   8. Describe center-tapped transformers;
   9. Describe multiple-winding transformers;
   10. Describe autotransformers;
   11. Discuss troubleshooting of transformers;

H. Discuss RC, RL and RLC circuits;

I. Discuss polyphase systems;
   1. Discuss the advantages of polyphase in power applications;
   2. Analyze three-phase generator configurations;
   3. Analyze three-phase generators with three-phase loads;
   4. Discuss power measurements in three-phase systems; and,

J. Practice and demonstration of skills listed above.

Summary:

Review the main lesson points using the suggested texts listed in the reference section of this module. Hold class discussion and answer student questions.

Next Lesson Assignment:

MASTER Technical Module (LSR-D3) dealing with investigating digital logic systems.

LSR-D2-HO
Perform AC Voltage, Current, and Power Measurements
Attachment 1: MASTER Handout

Objective(s):

Upon completion of this unit the student will be able to analyze AC circuits, including:

a. Demonstrating an understanding of sinusoidal voltage and current;
b. Calculating and measuring RMS voltage and current;
c. Measuring AC voltage and current using an oscilloscope;
d. Discussing principles and applications of capacitors;
e. Discussing principles and applications of inductors;
f. Discussing principles and applications of transformers;
g. Troubleshooting RC, RL and RLC circuits; and,
h. Demonstrating and understanding polyphase systems.

Module Outline:

I. Perform AC Voltage, Current, and Power Measurements
- A. Demonstrate an understanding of sinusoidal voltage and current
- B. Demonstrate an understanding of RMS current and voltage
- C. Measure RMS current and voltage using a digital multimeter
- D. Measure voltage and current using an oscilloscope
- E. Discuss principles and applications of capacitors:
  1. Discuss the basic structure and characteristics of capacitors
  2. Discuss various types of capacitors
  3. Analyze series capacitors
  4. Analyze parallel capacitors
  5. Analyze capacitive DC switching circuits
  6. Analyze AC capacitive circuits
  7. Discuss capacitor applications in power supply filters
  8. Perform testing of capacitors
- F. Discuss principles and applications of inductors:
  1. Discuss the basic structure and characteristics of inductors
  2. Discuss various types of inductors
  3. Analyze series inductors
  4. Analyze parallel inductors
  5. Analyze inductive DC switching circuits
  6. Analyze AC inductive circuits
  7. Discuss inductor applications in power supply filters
  8. Perform testing of inductors
- G. Discuss principles and applications of transformers
  1. Describe how a transformer is constructed and how it operates

2. Discuss step-up/step-down transformers
3. Discuss transformer secondary loading
4. Discuss reflected loads in transformers
5. Explain how a transformer is used as an isolation device
6. Describe practical transformer characteristics
8. Describe center-tapped transformers
9. Describe multiple-winding transformers
10. Describe autotransformers
11. Discuss troubleshooting of transformers

H. Discuss of RC, RL and RLC circuits

I. Discuss polyphase systems
1. Discuss the advantages of polyphase in power applications
2. Analyze three-phase generator configurations
3. Analyze three-phase generators with three-phase loads
4. Discuss power measurements in three-phase systems

LSR-D2-LE
Perform AC Voltage, Current, and Power Measurements
Attachment 2: MASTER Laboratory Exercise

Successful completion of this technical module will be based on the students' successful completion of the following components:

I. Perform AC Voltage, current, and power measurements;
- A. Demonstrate an understanding of sinusoidal voltage and current;
- B. Demonstrate an understanding of RMS current and voltage;
- C. Measure RMS current and voltage using a digital multimeter;
- D. Measure voltage and current using an oscilloscope;
- E. Discuss principles and applications of capacitors;
  1. Discuss the basic structure and characteristics of capacitors;
  2. Discuss various types of capacitors;
  3. Analyze series capacitors;
  4. Analyze parallel capacitors;
  5. Analyze capacitive DC switching circuits;
  6. Analyze AC capacitive circuits;
  7. Discuss capacitor applications in power supply filters;
  8. Perform testing of capacitors;
- F. Discuss principles and applications of inductors;
  1. Discuss the basic structure and characteristics of inductors;
  2. Discuss various types of inductors;
  3. Analyze series inductors;
  4. Analyze parallel inductors;
  5. Analyze inductive DC switching circuits;
  6. Analyze AC inductive circuits;
  7. Discuss inductor applications in power supply filters;
  8. Perform testing of inductors;
- G. Discuss principles and applications of transformers;
  1. Describe how a transformer is constructed and how it operates;
  2. Discuss step-up/step-down transformers;
  3. Discuss transformer secondary loading;
  4. Discuss reflected loads in transformers;
  5. Explain how a transformer is used as an isolation device;
  6. Describe practical transformer characteristics;
  8. Describe center-tapped transformers;
  9. Describe multiple-winding transformers;
  10. Describe autotransformers;
  11. Discuss troubleshooting of transformers;
- H. Discuss RC, RL and RLC circuits;
- I. Discuss polyphase systems;
  1. Discuss the advantages of polyphase in power applications;

2. Analyze three-phase generator configurations;
3. Analyze three-phase generators with three-phase loads;
4. Discuss power measurements in three-phase systems; and,

J. Practice and demonstration of skills listed above.

LASER MACHINING SERIES

MASTER Technical Module No. LSR-D3

Subject: Laser Machining **Time: 15 Hrs.**

Duty: Troubleshoot Industrial Electronics and Controls
Task: Investigate Digital Logic Systems

Objective(s):

Upon completion of this unit the student will be able to:

a. Demonstrate an understanding of digital and analog quantities;
b. Demonstrate an understanding of the binary number system;
c. Identify logic gates;
d. Demonstrate an understanding of Boolean expressions and truth tables;
e. Evaluate combinational logic circuits;
f. Discuss functions of combinational logic;
g. Discuss encoders/decoders and multiplexers;
h. Discuss flip-flops and related devices;
i. Discuss counters and shift registers;
j. Demonstrate an understanding of digital memory systems;
j. Demonstrate an understanding of system interfacing;
l. Discuss interfacing of logic families; and,
m. Troubleshoot digital logic systems.

Instructional Materials:

MASTER Handout (LSR-D3-HO)
MASTER Laboratory Exercise (LSR-D3-LE)

References:

Digital Electronics, Tokhiem, Glencoe Publishers, Latest Edition
Digital Electronics Lab Manual, Tokhiem, Glencoe Publishers, Latest Edition
Electronic Workbench circuit simulation software, Latest Edition

Student Preparation:

Students should have previously completed the following Technical Modules:

LSR-A1 through LSR-A4 "Practice Laser Safety"
LSR-B1 through LSR-B9 "Apply Mathematical Concepts"

LSR-D1 "Perform DC Voltage, Current, and Power Measurements"
LSR-D2 "Perform AC Voltage, Current, and Power Measurements"

Introduction:

A fundamental understanding of DC and AC circuit theory as well as analog and digital electronics is essential for any individual working in today's technological world. All industrial laser systems employ electronics in the generation of laser light. Electronics is used in power supplies for generating the energy required for pumping the active medium, for controlling components in the laser cavity such as Q-switches, shutters, and power monitoring, in the safety and interlock systems employed, in motion control as well as parts handing in automated systems. In this module, we will study digital logic systems and devices. A basic understanding of digital logic components, circuits and interfacing techniques will be explored. Troubleshooting techniques for digital logic systems will also be investigated.

Presentation Outline:

I. Demonstrate an Understanding of Digital and Analog Quantities
   A. Discuss positive and negative logic
   B. Discuss characteristics of pulse waveforms
   C. Discuss serial and parallel transfer
II. Demonstrate the Use of Digital Test Instruments
   A. Oscilloscope
   B. Logic analyzer
   C. Logic probe
   D. Logic clip
III. Demonstrate an Understanding of the Binary Number System
   A. Perform counting in binary
   B. Perform binary-to-decimal and decimal to binary conversion
   C. Discuss octal and hexadecimal number systems
IV. Identify Logic Gates
   A. The inverter
   B. The AND/NAND gate
   C. The OR/NOR gate
   D. The Exclusive OR/NOR gate
   E. Discuss TTL and CMOS integrated circuit logic families
V. Demonstrate an Understanding of Boolean Expressions and Truth Tables
VI. Test and Troubleshoot Combinational Logic Circuits
VII. Discuss Encoder/Decoders and Multiplexers
VIII. Discuss Flip-Flops and Related Devices
   A. Latches
   B. Edge triggered flip-flops
   C. Pulse-triggered flip-flops

D. One-shots
E. Astable multi vibrators and timers (555 timers)

IX. Discuss Counters and Shift Registers

X. Demonstrate an Understanding of Digital Memory Systems

XI. Demonstrate an Understanding of System Interfacing
A. Digital-to-analog conversion
B. Analog-to-digital conversion
C. The General Purpose Interface Bus (GPIB)
D. The RS-232 serial interface

XII. Discuss Interfacing of Logic Families
A. TTL practical considerations
B. CMOS practical considerations
C. TTL-CMOS interfacing
D. CMOS-TTL interfacing

Practical Application:

1. Perform selected experiments in ***Digital Electronics Activities Manual,*** Tokhiem, Glencoe Publishers, Latest Edition; and,
2. Simulate circuits from lab manual using ***Electronic Workbench*** software.

Evaluation and/or Verification:

Successful completion of this technical module will be based on the students' successful completion of the following components:

I. Demonstrate an understanding of digital and analog quantities;
a. Discuss positive and negative logic;
b. Discuss characteristics of pulse waveforms;
c. Discuss serial and parallel transfer;

II. Demonstrate the use of digital test instruments;
a. Oscilloscope;
b. Logic analyzer;
c. Logic probe;
d. Logic clip;

III. Demonstrate an understanding of the binary number system;
a. Perform counting in binary;
b. Perform binary-to-decimal and decimal to binary conversion;
c. Discuss octal and hexadecimal number systems;

IV. Identify logic gates;
a. The inverter;
b. The AND/NAND gate;
c. The OR/NOR gate;
d. The Exclusive OR/NOR gate;
e. Discuss TTL and CMOS integrated circuit logic families;

V. Demonstrate an understanding of boolean expressions and truth tables;
VI. Test and troubleshoot combinational logic circuits;
VII. Discuss encoder/decoders and multiplexers;
VIII. Discuss flip-flops and related devices;
  a. Latches;
  b. Edge triggered flip-flops;
  c. Pulse-triggered flip-flops;
  d. One-shots;
  e. Astable multi vibrators and timers (555 timers);
IX. Discuss counters and shift registers;
X. Demonstrate an understanding of digital memory systems;
XI. Demonstrate an understanding of system interfacing;
  a. Digital-to-analog conversion;
  b. Analog-to-digital conversion;
  c. The General Purpose Interface Bus (GPIB);
  d. The RS-232 serial interface;
XII. Discuss interfacing of logic families;
  a. TTL practical considerations;
  b. CMOS practical considerations;
  c. TTL-CMOS interfacing;
  d. CMOS-TTL interfacing; and,
XIII. Practice and demonstration of skills listed above.

Summary:

Review the main lesson points using the suggested texts listed in the reference section of this module. Hold class discussion and answer student questions.

Next Lesson Assignment:

MASTER Technical Module (LSR-D4) dealing with investigating diode applications.

LSR-D3-HO
Investigate Digital Logic Systems
Attachment 1: **MASTER** Handout

Objective(s):

Upon completion of this unit the student will be able to:

a. Demonstrate an understanding of digital and analog quantities;
b. Demonstrate an understanding of the binary number system;
c. Identify logic gates;
d. Demonstrate an understanding of Boolean expressions and truth tables;
e. Evaluate combinational logic circuits;
f. Discuss functions of combinational logic;
g. Discuss encoders/decoders and multiplexers;
h. Discuss flip-flops and related devices;
i. Discuss counters and shift registers;
j. Demonstrate an understanding of digital memory systems;
j. Demonstrate an understanding of system interfacing;
l. Discuss interfacing of logic families; and,
m. Troubleshoot digital logic systems.

Module Outline:

I. Demonstrate an Understanding of Digital and Analog Quantities
   A. Discuss positive and negative logic
   B. Discuss characteristics of pulse waveforms
   C. Discuss serial and parallel transfer
II. Demonstrate the Use of Digital Test Instruments
   A. Oscilloscope
   B. Logic analyzer
   C. Logic probe
   D. Logic clip
III. Demonstrate an Understanding of the Binary Number System
   A. Perform counting in binary
   B. Perform binary-to-decimal and decimal to binary conversion
   C. Discuss octal and hexadecimal number systems
IV. Identify Logic Gates
   A. The inverter
   B. The AND/NAND gate
   C. The OR/NOR gate
   D. The Exclusive OR/NOR gate
   E. Discuss TTL and CMOS integrated circuit logic families
V. Demonstrate an Understanding of Boolean Expressions and Truth Tables

VI. Test and Troubleshoot Combinational Logic Circuits
VII. Discuss Encoder/Decoders and Multiplexers
VIII. Discuss Flip-Flops and Related Devices
  A. Latches
  B. Edge triggered flip-flops
  C. Pulse-triggered flip-flops
  D. One-shots
  E. Astable multi vibrators and timers (555 timers)
IX. Discuss Counters and Shift Registers
X. Demonstrate an Understanding of Digital Memory Systems
XI. Demonstrate an Understanding of System Interfacing
  A. Digital-to-analog conversion
  B. Analog-to-digital conversion
  C. The General Purpose Interface Bus (GPIB)
  D. The RS-232 serial interface
XII. Discuss Interfacing of Logic Families
  A. TTL practical considerations
  B. CMOS practical considerations
  C. TTL-CMOS interfacing
  D. CMOS-TTL interfacing

LSR-D3-LE
Investigate Digital Logic Systems
Attachment 2: **MASTER** Laboratory Exercise

Successful completion of this technical module will be based on the students' successful completion of the following components:

I. Demonstrate an understanding of digital and analog quantities;
   a. Discuss positive and negative logic;
   b. Discuss characteristics of pulse waveforms;
   c. Discuss serial and parallel transfer;

II. Demonstrate the use of digital test instruments;
   a. Oscilloscope;
   b. Logic analyzer;
   c. Logic probe;
   d. Logic clip;

III. Demonstrate an understanding of the binary number system;
   a. Perform counting in binary;
   b. Perform binary-to-decimal and decimal to binary conversion;
   c. Discuss octal and hexadecimal number systems;

IV. Identify logic gates;
   a. The inverter;
   b. The AND/NAND gate;
   c. The OR/NOR gate;
   d. The Exclusive OR/NOR gate;
   e. Discuss TTL and CMOS integrated circuit logic families;

V. Demonstrate an understanding of boolean expressions and truth tables;

VI. Test and troubleshoot combinational logic circuits;

VII. Discuss encoder/decoders and multiplexers;

VIII. Discuss flip-flops and related devices;
   a. Latches;
   b. Edge triggered flip-flops;
   c. Pulse-triggered flip-flops;
   d. One-shots;
   e. Astable multi vibrators and timers (555 timers);

IX. Discuss counters and shift registers;

X. Demonstrate an understanding of digital memory systems;

XI. Demonstrate an understanding of system interfacing;
   a. Digital-to-analog conversion;
   b. Analog-to-digital conversion;
   c. The General Purpose Interface Bus (GPIB);
   d. The RS-232 serial interface;

XII. Discuss interfacing of logic families;
   a. TTL practical considerations;

b. CMOS practical considerations;
c. TTL-CMOS interfacing;
d. CMOS-TTL interfacing; and,

XIII. Practice and demonstration of skills listed above.

LASER MACHINING SERIES

MASTER Technical Module No. LSR-D4

Subject: Laser Machining **Time: 10 Hrs.**

Duty: Troubleshoot Industrial Electronics and Controls
Task: Investigate Diode Applications

Objective(s):

Upon completion of this unit the student will be able to demonstrate an understanding of diodes and applications, and:

a. Discuss N-type and P-type semiconductors;
b. Discuss PN junctions;
c. Discuss diode characteristics;
d. Discuss diodes and applications;
e. Discuss half-wave rectifiers;
f. Discuss full-wave rectifiers;
g. Discuss rectifier filters;
h. Discuss diode clipping and clamping circuits;
i. Discuss zener diodes; and,
j. Discuss LED's and photodiodes.

Instructional Materials:

MASTER Handout (LSR-D4-HO)
MASTER Laboratory Exercise (LSR-D4-LE)

References:

Fundamentals of Linear Circuits, Floyd, Merrill Publishers, Latest Edition
Electronic Workbench circuit simulation software, Latest Edition

Student Preparation:

Students should have previously completed the following Technical Modules:

LSR-A1 through LSR-A4 "Practice Laser Safety"
LSR-B1 through LSR-B9 "Apply Mathematical Concepts"
LSR-D1 "Perform DC Voltage, Current, and Power Measurements"
LSR-D2 "Perform AC Voltage, Current, and Power Measurements"
LSR-D3 "Investigate Digital Logic Systems"

Introduction:

A fundamental understanding of DC and AC circuit theory as well as analog and digital electronics is essential for any individual working in today's technological world. All industrial laser systems employ electronics in the generation of laser light. Electronics is used in power supplies for generating the energy required for pumping the active medium, for controlling components in the laser cavity such as Q-switches, shutters, and power monitoring, in the safety and interlock systems employed, in motion control as well as parts handing in automated systems. In this module, we will study the basic theory and operation of semiconductor diodes. Applications of diodes in power supplies such as voltage rectification and filtering will be discussed. The basic operation and applications LED's and photodiodes will also be covered.

Presentation Outline:

I. Demonstrate an Understanding Diodes and Applications
   - A. Discuss N-type and P-type semiconductors
   - B. Discuss PN junctions
   - C. Discuss diode characteristics
   - D. Discuss diodes and applications
   - E. Discuss half-wave rectifiers
   - F. Discuss full-wave rectifiers
   - G. Discuss rectifier filters
   - H. Discuss diode clipping and clamping circuits
   - I. Discuss zener diodes
   - J. Discuss LED's and photodiodes

Practical Application:

Perform selected experiments using *Electronic Workbench* circuit simulation software.

Evaluation and/or Verification:

Successful completion of this technical module will be based on the students' successful completion of the following components:

a. Demonstrate an Understanding Diodes and Applications;
   - (1) Discuss N-type and P-type semiconductors;
   - (2) Discuss PN junctions;
   - (3) Discuss diode characteristics;
   - (4) Discuss diodes and applications;
   - (5) Discuss half-wave rectifiers;
   - (6) Discuss full-wave rectifiers;

(7) Discuss rectifier filters;
(8) Discuss diode clipping and clamping circuits;
(9) Discuss zener diodes;
(10) Discuss LED's and photodiodes; and,
(11) Practice and demonstration of skills listed above.

Summary:

Review the main lesson points using the suggested texts listed in the reference section of this module. Hold class discussion and answer student questions.

Next Lesson Assignment:

MASTER Technical Module (LSR-D5) dealing with investigating transistors and thyristors.

LSR-D4-HO
Investigate Diode Applications
Attachment 1: MASTER Handout

Objective(s):

Upon completion of this unit the student will be able to demonstrate an understanding of diodes and applications, and:

a. Discuss N-type and P-type semiconductors;
b. Discuss PN junctions;
c. Discuss diode characteristics;
d. Discuss diodes and applications;
e. Discuss half-wave rectifiers;
f. Discuss full-wave rectifiers;
g. Discuss rectifier filters;
h. Discuss diode clipping and clamping circuits;
i. Discuss zener diodes; and,
j. Discuss LED's and photodiodes.

Module Outline:

I. Demonstrate an Understanding Diodes and Applications
   A. Discuss N-type and P-type semiconductors
   B. Discuss PN junctions
   C. Discuss diode characteristics
   D. Discuss diodes and applications
   E. Discuss half-wave rectifiers
   F. Discuss full-wave rectifiers
   G. Discuss rectifier filters
   H. Discuss diode clipping and clamping circuits
   I. Discuss zener diodes
   J. Discuss LED's and photodiodes

Successful completion of this technical module will be based on the students' successful completion of the following components:

a. Demonstrate an Understanding Diodes and Applications;
   (1) Discuss N-type and P-type semiconductors;
   (2) Discuss PN junctions;
   (3) Discuss diode characteristics;
   (4) Discuss diodes and applications;
   (5) Discuss half-wave rectifiers;
   (6) Discuss full-wave rectifiers;
   (7) Discuss rectifier filters;
   (8) Discuss diode clipping and clamping circuits;
   (9) Discuss zener diodes;
   (10) Discuss LED's and photodiodes; and,
   (11) Practice and demonstration of skills listed above.

LASER MACHINING SERIES

MASTER Technical Module No. LSR-D5

Subject: Laser Machining **Time: 10 Hrs.**

Duty: Troubleshoot Industrial Electronics and Controls
Task: Investigate Transistors and Thyristors

Objective(s):

Upon completion of this unit the student will be able to demonstrate an understanding of transistors and thyristors, and:

a. Discuss bipolar junction transistors (BJT's);
b. Discuss field effect transistors (FET's);
c. Discuss metal oxide semiconductors (MOSFET's);
d. Discuss unijunction transistors (UJT's);
e. Discuss transistor biasing;
f. Discuss transistors in switching applications;
g. Discuss thyristors; and,
h. Troubleshoot transistor circuits.

Instructional Materials:

MASTER Handout (LSR-D5-HO)
MASTER Laboratory Exercise (LSR-D5-LE)

References:

Fundamentals of Linear Circuits, Floyd, Merrill Publishers, Latest Edition
Electronic Workbench circuit simulation software, Latest Edition

Student Preparation:

Students should have previously completed the following Technical Modules:

LSR-A1 through LSR-A4 "Practice Laser Safety"
LSR-B1 through LSR-B9 "Apply Mathematical Concepts"
LSR-D1 "Perform DC Voltage, Current, and Power Measurements"
LSR-D2 "Perform AC Voltage, Current, and Power Measurements"
LSR-D3 "Investigate Digital Logic Systems"
LSR-D4 "Investigate Diode Applications"

Introduction:

A fundamental understanding of DC and AC circuit theory as well as analog and digital electronics is essential for any individual working in today's technological world. All industrial laser systems employ electronics in the generation of laser light. Electronics is used in power supplies for generating the energy required for pumping the active medium, for controlling components in the laser cavity such as Q-switches, shutters, and power monitoring, in the safety and interlock systems employed, in motion control as well as parts handing in automated systems. In this module, we will study the basic theory and operation of transistor and thyristor circuits. Discussion will focus on the switching capabilities of transistors as well as power supply applications.

Presentation Outline:

I. Demonstrate an Understanding of Transistors and Thyristors
   - A. Discuss bipolar junction transistors (BJT's)
   - B. Discuss field effect transistors (FET's)
   - C. Discuss metal oxide semiconductors (MOSFET's)
   - D. Discuss unijunction transistors (UJT's)
   - E. Discuss transistor biasing
   - F. Discuss transistors in switching applications
   - G. Discuss thyristors
   - H. Troubleshoot transistor circuits
   - I. Practice and demonstration of skills listed above

Practical Application:

Perform selected experiments using *Electronic Workbench* circuit simulation software.

Evaluation and/or Verification:

Successful completion of this technical module will be based on the students' successful completion of the following components:

a. Demonstrate an understanding of transistors ands thyristors;
b. Discuss bipolar junction transistors (BJT's);
c. Discuss field effect transistors (FET's);
d. Discuss metal oxide semiconductors (MOSFET's);
e. Discuss unijunction transistors (UJT's);
f. Discuss transistor biasing;
g. Discuss transistors in switching applications;
h. Discuss thyristors;

i. Troubleshoot transistor circuits; and,
j. Practice and demonstration of skills listed above.

Summary:

Review the main lesson points using the suggested texts listed in the reference section of this module. Hold class discussion and answer student questions.

Next Lesson Assignment:

MASTER Technical Module (LSR-D6) dealing with operational amplifiers.

LSR-D5-HO
Investigate Transistors and Thyristors
Attachment 1: **MASTER** Handout

Objective(s):

Upon completion of this unit the student will be able to demonstrate an understanding of transistors and thyristors, and:

a. Discuss bipolar junction transistors (BJT's);
b. Discuss field effect transistors (FET's);
c. Discuss metal oxide semiconductors (MOSFET's);
d. Discuss unijunction transistors (UJT's);
e. Discuss transistor biasing;
f. Discuss transistors in switching applications;
g. Discuss thyristors; and,
h. Troubleshoot transistor circuits.

Module Outline:

I. Demonstrate an Understanding of Transistors and Thyristors
   A. Discuss bipolar junction transistors (BJT's)
   B. Discuss field effect transistors (FET's)
   C. Discuss metal oxide semiconductors (MOSFET's)
   D. Discuss unijunction transistors (UJT's)
   E. Discuss transistor biasing
   F. Discuss transistors in switching applications
   G. Discuss thyristors
   H. Troubleshoot transistor circuits
   I. Practice and demonstration of skills listed above

LSR-D5-LE
Investigate Transistors and Thyristors
Attachment 2: **MASTER** Laboratory Exercise

Successful completion of this technical module will be based on the students' successful completion of the following components:

a. Demonstrate an understanding of transistors ands thyristors;
b. Discuss bipolar junction transistors (BJT's);
c. Discuss field effect transistors (FET's);
d. Discuss metal oxide semiconductors (MOSFET's);
e. Discuss unijunction transistors (UJT's);
f. Discuss transistor biasing;
g. Discuss transistors in switching applications;
h. Discuss thyristors;
i. Troubleshoot transistor circuits; and,
j. Practice and demonstration of skills listed above.

LASER MACHINING SERIES

MASTER Technical Module No. LSR-D6

Subject: Laser Machining **Time: 15 Hrs.**

Duty: Troubleshoot Industrial Electronics and Controls
Task: Investigate Operational Amplifiers

Objective(s):

Upon completion of this unit the student will be able to demonstrate an understanding of operational amplifiers, including:

a. Basic op-amp operation and characteristics;
b. Negative feedback;
c. Positive feedback;
d. Open and closed loop response;
e. Offset voltage compensation;
f. Comparators;
g. Summing amplifiers;
h. Instrumentation amplifiers;
i. Integrators and differentiator;
j. Constant current source;
k. Current-to-voltage converter;
l. Voltage-to-current converter;
m. Peak detector;
n. Analog to digital converters;
o. Digital to analog converters;
p. 555 timer circuits; and,
q. Troubleshooting op-amp circuits.

Instructional Materials:

MASTER Handout (LSR-D6-HO)
MASTER Laboratory Exercise (LSR-D6-LE)

References:

Fundamentals of Linear Circuits, Floyd, Merrill Publishers, Latest Edition
Electronic Workbench circuit simulation software, Latest Edition

Student Preparation:

Students should have previously completed the following Technical Modules:

LSR-A1 through LSR-A4 "Practice Laser Safety"
LSR-B1 through LSR-B9 "Apply Mathematical Concepts"
LSR-C1 through LSR-C9 "Perform Measurement and Inspection"
LSR-D1 "Perform DC Voltage, Current, and Power Measurements"
LSR-D3 "Investigate Digital Logic Systems"
LSR-D4 "Investigate Diode Applications"
LSR-D5 "Investigate Transistors and Thyristors"

Introduction:

A fundamental understanding of DC and AC circuit theory as well as analog and digital electronics is essential for any individual working in today's technological world. All industrial laser systems employ electronics in the generation of laser light. Electronics is used in power supplies for generating the energy required for pumping the active medium, for controlling components in the laser cavity such as Q-switches, shutters, and power monitoring, in the safety and interlock systems employed, in motion control as well as parts handing in automated systems. In this module, we will study the basic theory and operation of operational amplifiers. Discussion will include the many applications of op-amps such as voltage comparators, instrumentation amplifiers, constant current sources, timer circuits, and others.

Presentation Outline:

I. Discuss Principles and Applications of Operational Amplifiers
   - A. Basic op-amp operation and characteristics
   - B. Negative feedback
   - C. Positive feedback
   - D. Open and closed loop response
   - E. Offset voltage compensation
   - F. Comparators
   - G. Summing amplifiers
   - H. Instrumentation amplifiers
   - I. Integrators and differentiator
   - J. Constant current source
   - K. Current-to-voltage converter
   - L. Voltage-to-current converter
   - M. Peak detector
   - N. Analog to digital converters
   - O. Digital to analog converters
   - P. 555 timer circuits
   - Q. Troubleshooting op-amp circuits

Practical Application:

Perform selected experiments using *Electronic Workbench* circuit simulation software.

Evaluation and/or Verification:

Successful completion of this technical module will be based on the students' successful completion of the following components:

a. Demonstrate an understanding of operational amplifiers;
b. Basic op-amp operation and characteristics;
c. Negative feedback;
d. Positive feedback;
e. Open and closed loop response;
f. Offset voltage compensation;
g. Comparators;
h. Summing amplifiers;
i. Instrumentation amplifiers;
j. Integrators and differentiator;
k. Constant current source;
l. Current-to-voltage converter;
m. Voltage-to-current converter;
n. Peak detector;
o. Analog to digital converters;
p. Digital to analog converters;
q. 555 timer circuits;
r. Troubleshooting op-amp circuits; and,
s. Practice and demonstration of skills listed above.

Summary:

Review the main lesson points using the suggested texts listed in the reference section of this module. Hold class discussion and answer student questions.

Next Lesson Assignment:

MASTER Technical Module (LSR-D7) dealing with power supply circuits.

LSR-D6-HO
Investigate Operational Amplifiers
Attachment 1: **MASTER** Handout

Objective(s):

Upon completion of this unit the student will be able to demonstrate an understanding of operational amplifiers, including:

a. Basic op-amp operation and characteristics;
b. Negative feedback;
c. Positive feedback;
d. Open and closed loop response;
e. Offset voltage compensation;
f. Comparators;
g. Summing amplifiers;
h. Instrumentation amplifiers;
i. Integrators and differentiator;
j. Constant current source;
k. Current-to-voltage converter;
l. Voltage-to-current converter;
m. Peak detector;
n. Analog to digital converters;
o. Digital to analog converters;
p. 555 timer circuits; and,
q. Troubleshooting op-amp circuits.

Module Outline:

I. Discuss Principles and Applications of Operational Amplifiers
   A. Basic op-amp operation and characteristics
   B. Negative feedback
   C. Positive feedback
   D. Open and closed loop response
   E. Offset voltage compensation
   F. Comparators
   G. Summing amplifiers
   H. Instrumentation amplifiers
   I. Integrators and differentiator
   J. Constant current source
   K. Current-to-voltage converter
   L. Voltage-to-current converter
   M. Peak detector
   N. Analog to digital converters
   O. Digital to analog converters

ERIC

P. 555 timer circuits
Q. Troubleshooting op-amp circuits

Successful completion of this technical module will be based on the students' successful completion of the following components:

a. Demonstrate an understanding of operational amplifiers;
b. Basic op-amp operation and characteristics;
c. Negative feedback;
d. Positive feedback;
e. Open and closed loop response;
f. Offset voltage compensation;
g. Comparators;
h. Summing amplifiers;
i. Instrumentation amplifiers;
j. Integrators and differentiator;
k. Constant current source;
l. Current-to-voltage converter;
m. Voltage-to-current converter;
n. Peak detector;
o. Analog to digital converters;
p. Digital to analog converters;
q. 555 timer circuits;
r. Troubleshooting op-amp circuits; and,
s. Practice and demonstration of skills listed above.

LASER MACHINING SERIES

MASTER Technical Module No. LSR-D7

Subject: Laser Machining **Time: 5 Hrs.**

Duty: Troubleshoot Industrial Electronics and Controls
Task: Investigate Power Supply Circuits

Objective(s):

Upon completion of this unit the student will be able to demonstrate an understanding of power supply circuits, including:

a. Voltage regulation;
b. Basic series regulators;
c. Basic shunt regulators;
d. Basic switching regulators;
e. Integrated circuit voltage regulators;
f. Applications of IC regulators; and,
g. Troubleshooting power supply circuits.

Instructional Materials:

MASTER Handout (LSR-D7-HO)
MASTER Laboratory Exercise (LSR-D7-LE)

References:

Fundamentals of Linear Circuits, Floyd, Merrill Publishers, Latest Edition
Electronic Workbench circuit simulation software, Latest Edition

Student Preparation:

Students should have previously completed the following Technical Modules:

LSR-A1 through LSR-A4 "Practice Laser Safety"
LSR-B1 through LSR-B9 "Apply Mathematical Concepts"
LSR-C1 through LSR-C9 "Perform Measurement and Inspection"
LSR-D1 "Perform DC Voltage, Current, and Power Measurements"
LSR-D2 "Perform AC Voltage, Current, and Power Measurements"
LSR-D3 "Investigate Digital Logic Systems"
LSR-D4 "Investigate Diode Applications"
LSR-D5 "Investigate Transistors and Thyristors"
LSR-D6 "Investigate Operational Amplifiers"

Introduction:

A fundamental understanding of DC and AC circuit theory as well as analog and digital electronics is essential for any individual working in today's technological world. All industrial laser systems employ electronics in the generation of laser light. Electronics is used in power supplies for generating the energy required for pumping the active medium, for controlling components in the laser cavity such as Q-switches, shutters, and power monitoring, in the safety and interlock systems employed, in motion control as well as parts handing in automated systems. In this module, we will study the theory and operation of power supply circuits. Applications will include basic series and shunt regulators as well as switching regulators.

Presentation Outline:

I. Discuss the Basic Operation of Power Supply Circuits
   - A. Voltage regulation
   - B. Basic series regulators
   - C. Basic shunt regulators
   - D. Basic switching regulators
   - E. Integrated circuit voltage regulators
   - F. Applications of IC regulators
   - G. Troubleshooting power supply circuits
   - H. Practice and demonstration of the skills listed above

Practical Application:

Perform selected experiments using *Electronic Workbench* circuit simulation software.

Evaluation and/or Verification:

Successful completion of this technical module will be based on the students' successful completion of the following components:

a. Demonstrate an understanding of power supply circuits;
b. Voltage regulation;
c. Basic series regulators;
d. Basic shunt regulators;
e. Basic switching regulators;
f. Integrated circuit voltage regulators;
g. Applications of IC regulators;
h. Troubleshooting power supply circuits; and,
i. Practice and demonstration of the skills listed above.

Summary:

Review the main lesson points using the suggested texts listed in the reference section of this module. Hold class discussion and answer student questions.

Next Lesson Assignment:

MASTER Technical Module (LSR-E1) dealing with reflection and refraction at plane and spherical surfaces.

LSR-D7-HO
Investigate Power Supply Circuits
Attachment 1: **MASTER** Handout

Objective(s):

Upon completion of this unit the student will be able to demonstrate an understanding of power supply circuits, including:

a. Voltage regulation;
b. Basic series regulators;
c. Basic shunt regulators;
d. Basic switching regulators;
e. Integrated circuit voltage regulators;
f. Applications of IC regulators; and,
g. Troubleshooting power supply circuits.

Module Outline:

I. Discuss the Basic Operation of Power Supply Circuits
   A. Voltage regulation
   B. Basic series regulators
   C. Basic shunt regulators
   D. Basic switching regulators
   E. Integrated circuit voltage regulators
   F. Applications of IC regulators
   G. Troubleshooting power supply circuits
   H. Practice and demonstration of the skills listed above

Successful completion of this technical module will be based on the students' successful completion of the following components:

a. Demonstrate an understanding of power supply circuits;
b. Voltage regulation;
c. Basic series regulators;
d. Basic shunt regulators;
e. Basic switching regulators;
f. Integrated circuit voltage regulators;
g. Applications of IC regulators;
h. Troubleshooting power supply circuits; and,
i. Practice and demonstration of the skills listed above.

Laser Machinist .... apply the principles of electronics, lasers, optics, materials, engineering documentation, CAD/CAM, and systems integration to manufacture products following current industry and company standards.

Duties	Tasks												
A Practice Laser Safety	A-1 Discuss laser safety standards	A-2 Discuss basic laser principles	A-3 Discuss laser hazards	A-4 Discuss control measures									
B Apply Mathematical Concepts	B-1 Perform basic mathematical functions	B-2 Perform algebraic functions	B-3 Study exponents and right triangle geometry	B-4 Study elements of plane and solid geometry	B-5 Perform data evaluation and statistical analysis	B-6 Perform proportioning and interpolation	B-7 Perform basic trigonometric calculations	B-8 Investigate vectors and vector systems	B-9 Investigate the Cartesian Coordiante System				
C Perform Measurement and Inspection	C-1 Study basics of metrology	C-2 Select instruments used for measurement	C-3 Study datums and the three plane concept	C-4 Select gauging tools	C-5 Use CMM for location of features	C-6 Perform measurements for orientation tolerances	C-7 Perform measurment by optical comparison	C-8 Perform measurements for circularity, concentricity, runout, and straightness tolerances	C-9 Investigate advanced metrology topics				
D Troubleshoot Industrial Electronics and Control	D-1 Perform DC voltage, current, and power measurements	D-2 Perform AC voltage, current, and power measurements	D-3 Investigate digital logic systems	D-4 Investigate diode applications	D-5 Investigate transistors and thyristors	D-6 Investigate operational amplifiers	D-7 Investigate power supply circuits						
E Apply Concepts of Modern Optics	E-1 Study reflection and refraction at plane surfaces	E-2 Perform imaging with a single lens	E-3 Perform imaging with multiple lenses	E-4 Study F-stops and apertures	E-5 Use laser beam-expanding collimators	E-6 Study interference	E-7 Study diffraction	E-8 Study polarization	E-9 Investigate radiometry and photometry				
F Perform CNC Machining	F-1 Apply machine specific nomenclature and terminology	F-2 Investigate the Cartesian coordinate system as applied to a CNC mill or laser	F-3 Apply CNC programming language	F-4 Perform start up, tool changing, and ending of programs	F-5 Perform positioning and basic drilling	F-6 Create a sub-program	F-7 Perform contouring	F-8 Apply tool radius compensation	F-9 Perform program preparation	F-10 Apply special laser coding parameters			
G Investigate Industrial Laser Systems	G-1 Review characteristics of light	G-2 Investigate emission and absorption of light	G-3 Discuss optical cavities and laser modes	G-4 Discuss temporal characteristics of lasers	G-5 Investigate spatial characteristics of lasers	G-6 Discuss laser classifications and characteristics							
H Perform Computer-Aided Drafting (CAD)	H-1 Discuss and understand PC basics	H-2 Discuss CAD basics and file management	H-3 Use drawing settings	H-4 Perform basic editing commands	H-5 Create drawings with accuracy	H-6 Organize drawing information	H-7 Control the display of drawings	H-8 Use intermediate drawing commands	H-9 Perform intermediate editing commands	H-10 Create multi view drawings	H-11 Create sectioned drawings	H-12 Investigate basic dimensioning	H-13 Perform advanced dimensioning
	H-14 Use and manipulate blocks	H-15 Use blocks to automate the drawing process											
I Perform Laser Materials Processing	I-1 Review laser safety standards	I-2 Discuss lasers used for materials processing	I-3 Discuss laser optics and beam characteristics	I-4 Investigate absorption of laser energy	I-5 Use lasers for welding and surface treatment	I-6 Use lasers for material removal							
J Perform Computer-Aided Manufacturing (CAM)	J-1 Discuss and understand the basics of a PC based CAM system	J-2 Discuss basic CAM operations	J-3 Set up cutting tools	J-4 Create simple part profiles	J-5 Create and edit complex part profiles	J-6 Perform roughing, drilling, and counterboring	J-7 Advanced editing of part profiles	J-8 Edit tool paths	J-9 Use construction layers in SmartCAM	J-10 Perform user commands and machine events	J-11 Create families of parts	J-12 Perform CAD/CAM integration	J-13 Perform code generation

LSR PM4
040698

LASER MACHINING SERIES

MASTER Technical Module No. LSR-E1

Subject: **Laser Machining** **Time: 5 Hrs.**

Duty: **Apply Concepts of Modern Optics**
Task: Study Reflection and Refraction at Plane Surfaces

Objective(s):

Upon completion of this unit the student will be able to:
a. Use Snell's Law to demonstrate reflection from a plane surface;
b. Use Snell's Law to demonstrate refraction at a plane surface; and,
c. Use Snell's Law to calculate index of refraction.

Instructional Materials:

Low-power HeNe laser
Optical bench
Protractor and graph paper
Semicircular plate of Lucite
MASTER Handout (LSR-E1-HO)
MASTER Laboratory Exercise (LSR-E1-LE)
MASTER Laboratory Worksheet (LSR-E1-LW)
MASTER Laboratory Aid (LSR-E1-LA)

References:

Introduction to Classical and Modern Optics, Meyer-Arendt, Jurgen R., Prentice Hall, Latest Edition
Light Sources and Wave Optics, CORD Communications, Laser Electro-Optics Series, Latest Edition
Introduction to Lasers, CORD Communications, Laser Electro-Optics Series, Latest Edition
ANSI-Z136.1 (1993), *Safe Use of Lasers,* Laser Institute of America, Publication No. 106, Latest Edition
An Introduction to Lasers and Their Applications, O'Shea, Callen, Rhodes, Addison-Wesley Publishers, Latest Edition
Industrial Applications of Lasers, John F. Ready, Academic Press, Latest Edition
Understanding Lasers - An Entry-Level Guide, Jeff Hecht, IEEE Press, Latest Edition

Video(s): *Video Demonstrations in Lasers and Optics,* MIT Center for Advanced Engineering Study, MIT/CAES, Rm. 9-234, 77 Massachusetts Avenue, Cambridge, MA 02139-4391
Introduction to Laser Safety and Laser Hazards Video Training Module, Laser Institute of America, Publication No. 115, 12424 Research Parkway, Suite 125, Orlando, FL 32826

Student Preparation:

Students should have previously completed the following Technical Modules:

LSR-A1 through LSR-A4	"Practice Laser Safety"
LSR-B1 through LSR-B9	"Apply Mathematical Concepts"

Introduction:

When light strikes a surface, a portion of the light is reflected and a portion is refracted, that is, transmitted into the material. The remaining light is either scattered or absorbed. The index of refraction of a material is relative measure of how fast light travels in a material as compared to the speed of light in a vacuum. The index of refraction of a material can be used to determine the angle at which light is refracted in a material. In this module, we will use Snell's law to determine the refraction angle and to calculate the index of refraction of a material.

Presentation Outline:

I. Study Reflection and Refraction at Plane Surfaces
   - A. Discuss and demonstrate the law of reflection
   - B. Discuss and demonstrate the law of refraction
   - C. Calculate the refraction and for a variety of materials using Snell's Law
   - D. Calculate the index of refraction for a variety of materials using Snell's Law
   - E. Discuss diffuse and specular reflections
   - F. Practice and demonstration of skills listed above

Practical Application:

Students will perform selected experiments on the topics listed above. Following each laboratory experiment, students will complete laboratory worksheet (LSR-E1-LW).

Evaluation and/or Verification:

Successful completion of this technical module will be based on the students' successful completion of the following components:

1. Discuss and demonstrate the law of reflection;
2. Discuss and demonstrate the law of refraction;
3. Calculate the refraction and for a variety of materials using Snell's Law;
4. Calculate the index of refraction for a variety of materials using Snell's Law;
5. Discuss diffuse and specular reflections; and,
6. Practice and demonstration of skills listed above.

Summary:

Review the main lesson points using the suggested texts listed in the reference section of this module. Hold class discussion and answer student questions.

Next Lesson Assignment:

MASTER Technical Module (LSR-E2) pertaining to performing imaging with a single lens.

LSR-E1-HO
Study Reflection and Refraction at Plane Surfaces
Attachment 1: MASTER Handout

Objective(s):

Upon completion of this unit the student will be able to:

a. Use Snell's Law to demonstrate reflection from a plane surface;
b. Use Snell's Law to demonstrate refraction at a plane surface; and,
c. Use Snell's Law to calculate index of refraction.

Module Outline:

I. Study Reflection and Refraction at Plane Surfaces
   A. Discuss and demonstrate the law of reflection
   B. Discuss and demonstrate the law of refraction
   C. Calculate the refraction and for a variety of materials using Snell's Law
   D. Calculate the index of refraction for a variety of materials using Snell's Law
   E. Discuss diffuse and specular reflections
   F. Practice and demonstration of skills listed above

LSR-E1-LE
Study Reflection and Refraction at Plane Surfaces
Attachment 2: **MASTER** Laboratory Exercise

Successful completion of this technical module will be based on the students' successful completion of the following components:

1. Discuss and demonstrate the law of reflection;
2. Discuss and demonstrate the law of refraction;
3. Calculate the refraction and for a variety of materials using Snell's Law;
4. Calculate the index of refraction for a variety of materials using Snell's Law;
5. Discuss diffuse and specular reflections; and,
6. Practice and demonstration of skills listed above.

Refraction at Plane Surfaces

Objective

The purpose of this experiment is to familiarize the student with the concept of light refraction at an optical interface boundary. Light can be reflected or transmitted at a boundary separating two optical media, such as an interface between air and a glass plate. When the light isn't incident normal to the interface, the transmitted ray is bent either toward or away from the normal. This phenomenon is known as *refraction.*

Materials

Low-power HeNe laser
Protractor
Semicircular plate of Lucite
Graduated circular rotating mount

Procedure

1. Set up the experimental apparatus as shown in Figure 1.

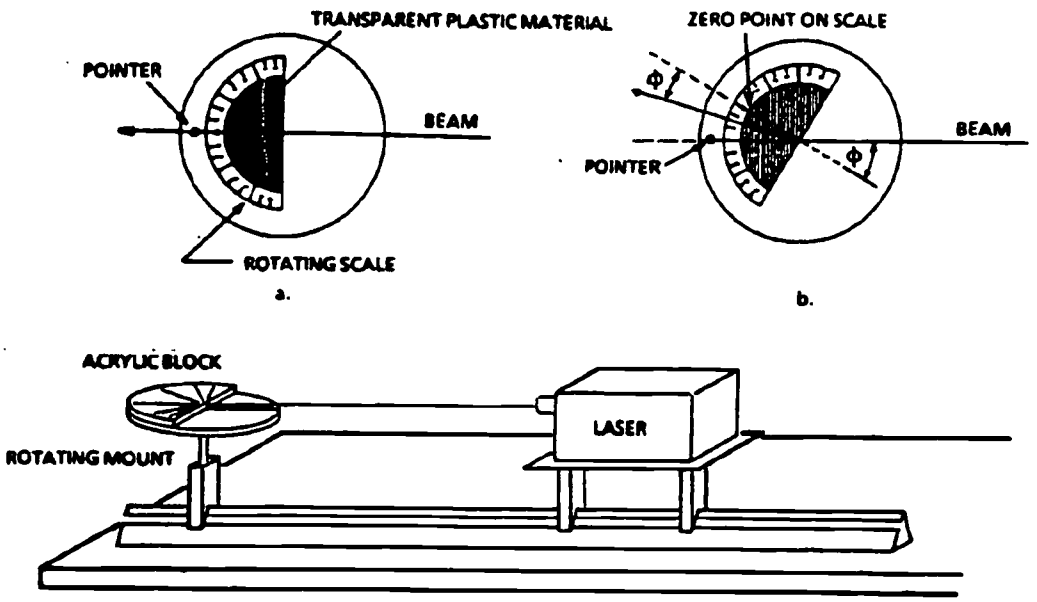

Figure 1

Snell's Law:

$$n \sin \Phi = n' \sin \Phi'$$

2. Use a graduated circular rotating mount, a low power HeNe laser, and a piece of smoked Lucite or any other transparent material that will give a visual track of the laser beam passing through it. Align the apparatus so the beam of the laser enters the material on the flat side and hits the pointer at the point marked zero on the far side from the laser. Rotate the table in steps of 10° (as tabulated in the column marked "Φ" in Data Table 1) until an angle of approximately 90° is reached. At each of these 10° settings, record the angle that the refracted ray makes with the "0°" point on the graduated scale.

3. When you have these data, fill in the rest of Data Table 1 for n sin Φ, assuming n = 1, and for n′ sin Φ′, assuming n′ = 1.5. Compare the values to verify that *n sin Φ* is experimentally equal to *n′ sin Φ′* for each angle of incidence.

4. Plot the values of n sin Φ versus n′ sin Φ′, tabulated in Data Table 1. Explain any differences between this curve and the expected result indicated by a straight line at 45° on an equi-scaled graph.

Part II

1. Determine the index of refraction of a clear piece of plastic by measuring the incident angle Φ and the refracted angle, Φ′ as shown in Figure 2.

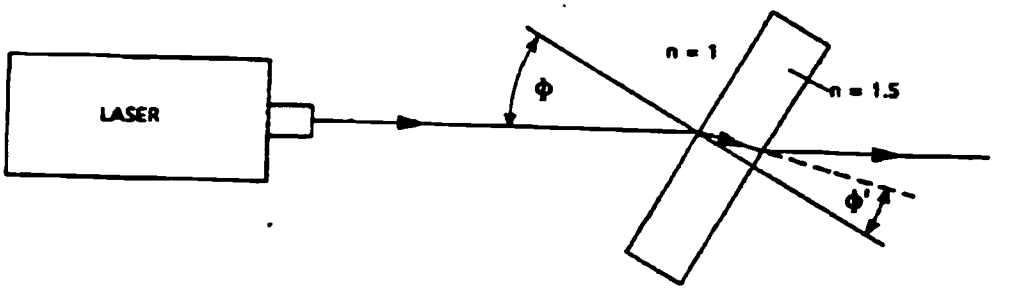

Figure 2

2. With an incident angle of approximately 50°, measure both the incident angle Φ and the refracted angle Φ′. Record in Data Table 2. When you've experimentally determined Φ and Φ′, calculate sin Φ and sin Φ′. Record in Data Table 2.

3. Given the index of refraction of air: n = 1, Use Snell's law and the data in Data Table 2, calculate the index of refraction of the plastic n′. Compare your answer with the number, n′ = 1.49. This is approximately the index of refraction for most commercially available Lucite or plastic.

4. Using the values of Φ and Φ′,and the thickness t of the Lucite or plastic block, compute the displacement, d, of the laser beam in Figure 2. from using the equation

$$d = t\sin\Phi_1\left[1 - \frac{\cos\Phi_1}{\sqrt{n^2 - \sin^2\Phi_1}}\right]$$

5. Compare this calculation with the displacement measured by observing the shift in beam position with and without the Lucite or plastic block inserted in the beam.

Data Table 1.

Φ	Φ′	n = 1	n′ = 1.5	n sin Φ	n′ sin Φ′
0°					
10°					
20°					
30°					
40°					
50°					
60°					
70°					
80°					
90°					

Data Table 2.

Φ	Φ′	sin Φ	sin Φ′	n'_{cal}	n′ = 1.5	t_{meas}	d_{cal}	d_{meas}

Rules of Conduct

Students must behave in a professional and responsible manner, observing all laser safety rules as outlined in ANSI-Z136.1, *Safe Use of Lasers*.

LASER MACHINING SERIES

MASTER Technical Module No. LSR-E2

Subject: Laser Machining **Time: 15 Hrs.**

Duty: Apply Concepts of Modern Optics
Task: Perform Imaging With a Single Lens

Objective(s):

Upon completion of this unit the student will be able to:

a. Determine focal points and focal lengths in positive thin lenses;
b. Demonstrate image formation with a positive thin lens;
c. Determine focal points and focal lengths in negative thin lenses; and,
d. Demonstrate image formation with a negative thin lens.

Instructional Materials:

Low-power HeNe laser
Ruler
Large diameter concave and convex lens
Large piece of white paper
MASTER Handout (LSR-E2-HO)
MASTER Laboratory Exercise (LSR-E2-LE)
MASTER Laboratory Aid (LSR-E2-LA)

References:

Introduction to Classical and Modern Optics, Meyer-Arendt, Jurgen R., Prentice Hall, Latest Edition
Geometric Optics, CORD Communications, Laser Electro-Optics Series, Latest Edition

Student Preparation:

Students should have previously completed the following Technical Modules:

LSR-A1 through LSR-A4 "Practice Laser Safety"
LSR-B1 through LSR-B9 "Apply Mathematical Concepts"
LSR-E1 "Study Reflection and Refraction at Plane Surfaces"

Introduction:

Light can be represented at several levels of sophistication. The simplest of these is to represent the light by rays. That is the domain of geometrical optics. But, if the wave length of the light can not be neglected in comparison to the dimensions of the system as a whole, we need to take into account the wave nature of light. We need to represent the light by waves. That is the domain of physical optics. In this module, the student will demonstrate how an image is formed using a single thin lens (positive and negative).

Presentation Outline:

I. Discuss and Demonstrate Imaging with a Single Lens
   - A. Types of thin lenses (i.e., biconvex, plano-convex, and positive meniscus)
   - B. Determination of focal points and focal lengths
   - C. The Lensmaker's equation
   - D. Focal planes
   - E. Geometric ray tracing
   - F. Thin lens equation and magnification
   - G. Practice and demonstration of skills listed above

Practical Application:

Students will perform selected experiments on the topics listed above from *Geometric Optics,* CORD Communications, Latest Edition. Following each laboratory experiment, students will complete a laboratory worksheet provided by the instructor.

Evaluation and/or Verification:

Successful completion of this technical module will be based on the students' successful completion of the following components:

1. Identify types of thin lenses (i.e., biconvex, plano-convex, and positive meniscus);
2. Determination of focal points and focal lengths;
3. Use the Lensmaker's equation;
4. Determine focal planes;
5. Perform geometric ray tracing;
6. Apply the thin lens equation and calculate magnification; and,
7. Practice and demonstration of skills listed above.

Summary:

Review the main lesson points using the suggested texts listed in the reference section of this module. Hold class discussion and answer student questions.

Next Lesson Assignment:

MASTER Technical Module (LSR-E3) pertaining to imaging with multiple thin lenses.

LSR-E2-HO
Perform Imaging With a Single Lens
Attachment 1: **MASTER** Handout

Objective(s):

Upon completion of this unit the student will be able to:

a. Determine focal points and focal lengths in positive thin lenses;
b. Demonstrate image formation with a positive thin lens;
c. Determine focal points and focal lengths in negative thin lenses; and,
d. Demonstrate image formation with a negative thin lens.

Module Outline:

I. Discuss and Demonstrate Imaging with a Single Lens
   A. Types of thin lenses (i.e., biconvex, plano-convex, and positive meniscus)
   B. Determination of focal points and focal lengths
   C. The Lensmaker's equation
   D. Focal planes
   E. Geometric ray tracing
   F. Thin lens equation and magnification
   G. Practice and demonstration of skills listed above

Successful completion of this technical module will be based on the students' successful completion of the following components:

1. Identify types of thin lenses (i.e., biconvex, plano-convex, and positive meniscus);
2. Determination of focal points and focal lengths;
3. Use the Lensmaker's equation;
4. Determine focal planes;
5. Perform geometric ray tracing;
6. Apply the thin lens equation and calculate magnification; and,
7. Practice and demonstration of skills listed above.

Rules of Conduct

Students must behave in a professional and responsible manner, observing all laser safety rules as outlined in ANSI-Z136.1, *Safe Use of Lasers*.

LASER MACHINING SERIES

MASTER Technical Module No. LSR-E3

Subject: Laser Machining **Time: 5 Hrs.**

Duty: Apply Concepts of Modern Optics
Task: Perform Imaging with Multiple Lenses

Objective(s):

Upon completion of this unit the student will be able to:
a. Perform imaging using two converging lenses; and,
b. Perform imaging using a converging and diverging lens.

Instructional Materials:

Low-power HeNe laser
Ruler
2-large diameter convex lenses and 1- large diameter concave lens
Large piece of white paper
MASTER Handout (LSR-E3-HO)
MASTER Laboratory Exercise (LSR-E3-LE)
MASTER Laboratory Worksheet (LSR-E3-LW)
MASTER Laboratory Aid (LSR-E3-LA)

References:

Introduction to Classical and Modern Optics, Meyer-Arendt, Jurgen R., Prentice Hall, Latest Edition
Geometric Optics, CORD Communications, Laser Electro-Optics Series, Latest Edition

Student Preparation:

Students should have previously completed the following Technical Modules:
LSR-A1 through LSR-A4 "Practice Laser Safety"
LSR-B1 through LSR-B9 "Apply Mathematical Concepts"
LSR-E1 "Study Reflection and Refraction at Plane Surfaces"
LSR-E2 "Perform Imaging With a Single Lens"

Introduction:

Light can be represented at several levels of sophistication. The simplest of these is to represent the light by rays. That is the domain of geometrical optics. But, if the wave length of the light can not be neglected in comparison to the dimensions of the system as a whole, we need to take into account the wave nature of light. We need to represent the light by waves. That is the domain of physical optics. In this module, the student will demonstrate how an image is formed using multiple lenses (positive and negative).

Presentation Outline:

I. Discuss and Demonstrate Imaging with Multiple Lenses
   - A. Ray tracing with multiple lenses
   - B. Analysis of dual-lens systems using the thin lens formula
   - C. Power of a thin lens
   - D. Practice and demonstration of skills listed above.

Practical Application:

Students will perform selected experiments on the topics listed above from *Geometric Optics,* CORD Communications, Latest Edition. Following each laboratory experiment, students will complete laboratory worksheet (LSR-E3-LW).

Evaluation and/or Verification:

Successful completion of this technical module will be based on the students' successful completion of the following components:

1. Determine analytically, graphically, and experimentally the primary and secondary focal points of a lens;
2. Determine analytically, graphically, and experimentally the size and location of the image produced by a dual-lens system consisting of two converging lenses;
3. Determine analytically, graphically, and experimentally the size and location of the image produced by a dual-lens system consisting of one converging lens and one diverging lens;
4. Given the object distance and height for an optical system of two lenses of known focal length and placement, determine the following:
   a. Position and size of the final image;
   b. Lateral magnification, using both mathematical and graphical ray tracing methods;
5. Given a system of three lenses of known focal length and placement, determine the position of the image; and,
6. Practice and demonstration of skills listed above.

Summary:

Review the main lesson points using the suggested texts listed in the reference section of this module. Hold class discussion and answer student questions.

Next Lesson Assignment:

MASTER Technical Module (LSR-E4) pertaining to F-stops and apertures.

LSR-E3-HO
Perform Imaging With Multiple Lenses
Attachment 1: **MASTER** Handout

Objective(s):

Upon completion of this unit the student will be able to:

a. Perform imaging using two converging lenses; and,
b. Perform imaging using a converging and diverging lens.

Module Outline:

I. Discuss and Demonstrate Imaging with Multiple Lenses
   A. Ray tracing with multiple lenses
   B. Analysis of dual-lens systems using the thin lens formula
   C. Power of a thin lens
   D. Practice and demonstration of skills listed above.

Successful completion of this technical module will be based on the students' successful completion of the following components:

1. Determine analytically, graphically, and experimentally the primary and secondary focal points of a lens;
2. Determine analytically, graphically, and experimentally the size and location of the image produced by a dual-lens system consisting of two converging lenses;
3. Determine analytically, graphically, and experimentally the size and location of the image produced by a dual-lens system consisting of one converging lens and one diverging lens;
4. Given the object distance and height for an optical system of two lenses of known focal length and placement, determine the following:
   a. Position and size of the final image;
   b. Lateral magnification, using both mathematical and graphical ray tracing methods;
5. Given a system of three lenses of known focal length and placement, determine the position of the image; and,
6. Practice and demonstration of skills listed above.

Imaging With Multiple Lenses

Objective

Complicated optical systems are often comprised of a series of individual lenses. An understanding of how single lenses can be combined into multiple lens systems for generating images is critical to the understanding of more complex optical systems. In this lab, the student will learn how to locate the primary and secondary focal lengths of a lens and the position of the image using graphical techniques.

Materials

Low-power HeNe laser
Ruler
Two large-diameter convex lenses and one large-diameter concave lens
Large piece of white paper
Wooden blocks, aluminum strips to form stops

Procedure

Before continuing, it might be helpful to point out that you could study a large number of possible dual-lens combinations. For simplicity, and for the sake of convenience, we suggest that the lenses chosen for this procedure have focal lengths of between 10 and 20 cm and that object distances be no greater than two times the focal length. We also suggest that the lenses be placed approximately one-half of a focal length apart. In the following procedures, the lenses have been chosen to that their focal lengths are +10 cm for the converging lenses and -10 cm for the divergent lenses. In both cases, the lenses are placed 5 cm apart and the object distance s_1 is chosen to be 20 cm. Likewise, the object height y_1 is arbitrarily chosen to be 2 cm.

Two Converging Lenses

1. Before you determine the imaging characteristics of a dual-lens system, you must determine the focal lengths of each lens. If the lenses used here are the same as those used in the previous module, you can omit this step. If different lenses are to be used, determine the primary and secondary focal lengths graphically, mathematically, and experimentally as outlined in the previous module. Record all data in the appropriate columns in Data Tables 1 and 2.

2. On a large piece of paper, draw a long optical axis and two lines perpendicular to this axis located 5 cm apart. Place the thin lens sections over these lines and trace their outlines. Record the primary and secondary focal points of both

lenses on the optical axis. At a distance 20 cm to the left of the lens L_1, draw a vertical arrow whose height is 2 cm. Label this arrow y_1. The figure should look similar to the one in Figure 1.

Figure 1

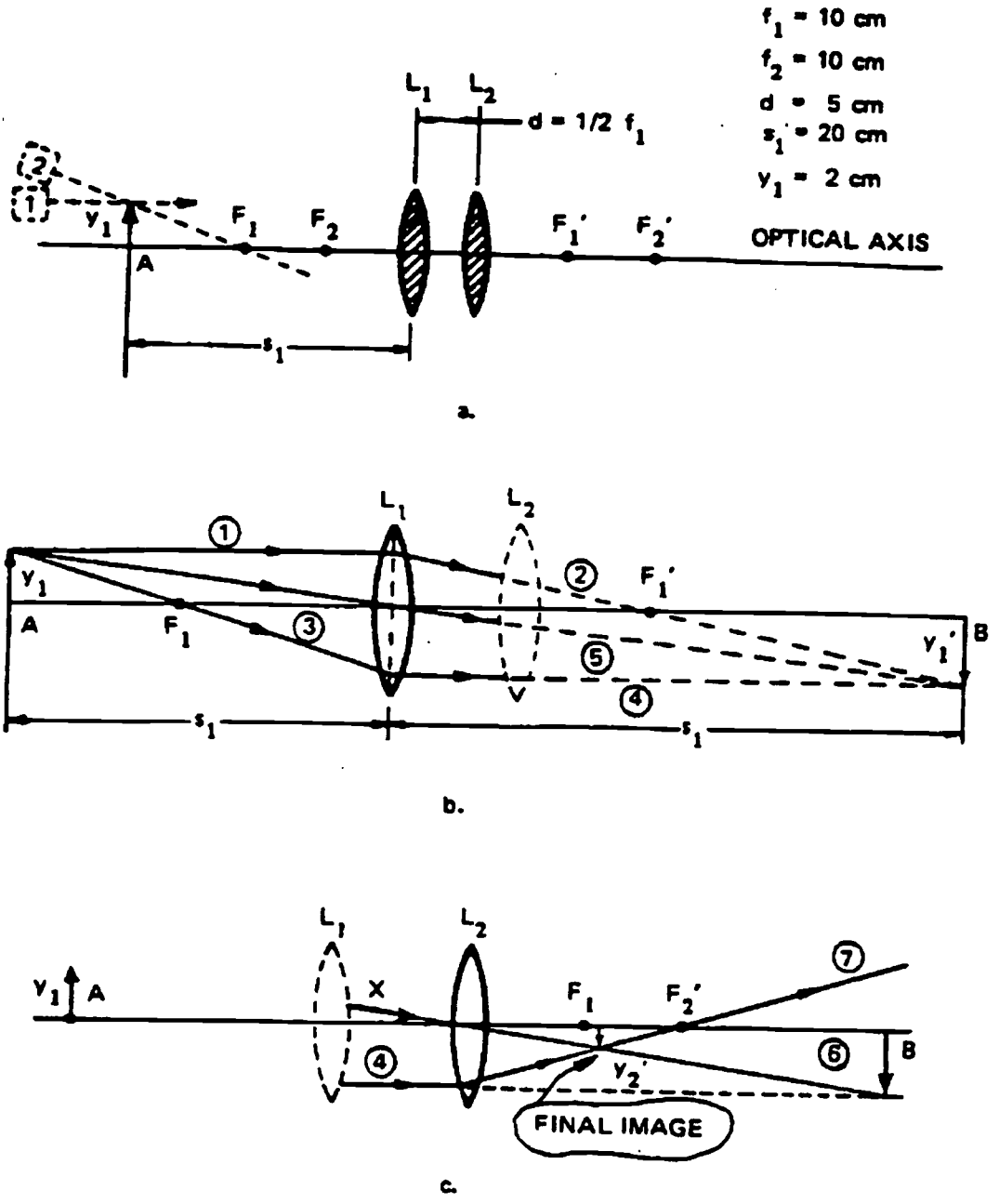

3. After you've made a suitable scale drawing, graphically ray-trace this dual-lens system and determine the final image location and size. Record these data in the appropriate columns in Data Table 1.

4. When you've determined the image location and size, place it on a laboratory table, place lenses L_1 and L_2 over their outlines

5. Place the laser in position 1 (see Figure 1a) so that the beam of the laser passes directly over the tip of y_1 and is parallel to the optical axis. Trace this ray on the paper through the entire lens system.

6. Place the laser in position 2 so that the beam of the laser passes directly over the tip of y_1 and through the primary focal point F_1 of lens 1. Trace this ray through the entire system.

7. Note the place where these two rays cross. Draw an arrow form this point to the optical axis. This is the image produced by this optical system of the object y_1. Record the image location and size in the appropriate columns of Data Table 1.

8. Using the thin-lens formula:

$$\frac{1}{f}=\frac{1}{s_1}+\frac{1}{s_{-1}}$$

where f = focal length
s_1 = object distance
s'_1 = image distance

determine the final image size and locations mathematically. Record these data in the appropriate columns of Data Table 1.

A Converging Lens and a Diverging Lens

1. As before, you must determine the primary and secondary focal lengths of the lenses to be used and record them in the appropriate columns of Data Table 2. If these lenses are the same as those used in the previous module, you can omit this step.

2. On a large piece of paper, draw an optical axis and two lines 5 cm apart, perpendicular to the optical axis. Label these lines 1 and 2. Trace the sections of lenses L_1 and L_2 on the perpendicular lines as shown in Figure 2. Indicate the primary and secondary focal points of both lenses on the optical axis. Draw an object 20 cm to the left of lens L_1, 2 cm high. Label this object y_1.

3. Graphically ray-trace this dual lens system. Record the resulting image location and size in the appropriate columns of Data Table 2.

4. When you have the graphical ray-tracing results, place the lenses over their outlines.

5. Place the laser in position 1 (see Figure 2) so that the beam of the laser passes over the tip of arrow y_1 and is parallel to the optical axis. Trace this ray through the entire system on the paper.

6. Place the laser in position 2 so that the beam of the laser passes directly over the tip of arrow y_1 and through the primary focal point of lens L_1. Trace this ray through the entire lens system on the paper.

7. Note the point where these two rays cross or appear to have crossed. Draw a line from this cross section to the optical axis. The point of intersection of these two lines determines the image of y_1. Record the location of this image and its size in the appropriate columns of Data Table 2.

8. Using the thin-lens formula, determine the final image size and location. Record the data in Data Table 2.

Data Table 1. Two Converging Lenses

Method	f1	f2	d cm	s_1 cm	s'_1 cm	s_2 cm	s'_2 cm	y_1 cm	y'_1 cm	y'_2 cm
Graphical										
Mathematical										
Experimental										

Data Table 2. A Converging Lens and a Diverging Lens

Method	f1	f2	d cm	s_1 cm	s'_1 cm	s_2 cm	s'_2 cm	y_1 cm	y'_1 cm	y'_2 cm
Graphical										
Mathematical										
Experimental										

BEST COPY AVAILABLE

Rules of Conduct

1. Absolutely no horseplay or practical joking will be tolerated.
2. Do not talk to anyone who is operating a machine.
3. Walk only in the designated traffic lanes.
4. Dress appropriately; at the absolute minimum, you must have:
   a. No loose clothing, including ties;
   b. Long hair properly stowed;
   c. No jewelry;
   d. Hard, closed-toe shoes;
   e. Eye protection (safety glasses); and,
   f. Ear protection (plugs or headset).
5. Follow all institutional safety rules.

Rules of Conduct

Students must behave in a professional and responsible manner, observing all laser safety rules as outlined in ANSI-Z136.1, *Safe Use of Lasers*.

LASER MACHINING SERIES

MASTER Technical Module No. LSR-E4

Subject: Laser Machining **Time: 5 Hrs.**

Duty: Apply Concepts of Modern Optics
Task: Study F-Stops and Apertures

Objective(s):

Upon completion of this unit the student will be able to:
a. Determine field stops and aperture stops; and,
b. Determine entrance and exit pupils.

Instructional Materials:

Low-power HeNe laser
Ruler
Two positive and one negative thin lens
Compass
Large piece of white paper
MASTER Handout (LSR-E4-HO)
MASTER Laboratory Exercise (LSR-E4-LE)
MASTER Laboratory Aid (LSR-E4-LA)

References:

Introduction to Classical and Modern Optics, Meyer-Arendt, Jurgen R., Prentice Hall, Latest Edition
Geometric Optics, CORD Communications, Laser Electro-Optics Series, Latest Edition
ANSI-Z136.1, *Safe Use of Lasers,* Laser Institute of America (Publication No. 106), Latest Edition
Video: *Introduction to Laser Safety and Laser Hazards Training Module,* Laser Institute of America, Publication No. 115, Latest Edition

Student Preparation:

Students should have previously completed the following Technical Modules:
LSR-A1 through LSR-A4 "Practice Laser Safety"
LSR-B1 through LSR-B9 "Apply Mathematical Concepts"
LSR-E1 "Study Reflection and Refraction at Plane Surfaces"

LSR-E2 "Perform Imaging With a Single Lens"
LSR-E3 "Perform Imaging With Multiple Lenses"

Introduction:

Geometrical optics deals primarily with determining the image size and position for a variety of optical systems using experimental, graphical and mathematical techniques. There are, however, other important considerations in optical systems that do not directly concern the size and location of images produced by the optical systems. Two of these considerations are the field of view and the brightness of an image. The field of view is determined by how much of an object can be seen by looking back at the object from the image. The brightness of the image is determined by how much light passes through an optical system. In this module, the student will discuss the field of view and the brightness of images by defining f-stops and apertures.

Presentation Outline:

I. Discuss and Demonstrate Field-stops and Apertures
   A. Determine aperture stops
   B. Determine field stops
   C. Analyze chief rays and marginal rays
   D. Determine entrance and exit windows
   E. Practice and demonstration of skills listed above
II. Determine Entrance and Exit Pupils
   A. Determine entrance pupils
   B. Determine exit pupils
   C. Practice and demonstration of skills listed above

Practical Application:

Students will perform selected experiments on the topics listed above from *Geometric Optics*, CORD Communications, Latest Edition.

Evaluation and/or Verification:

Successful completion of this technical module will be based on the students' successful completion of the following:

1. Define and label field stops and aperture stops on a diagram;
2. Define entrance and exit pupils on a diagram;
3. Determine analytically and graphically the entrance and exit pupils of a lens with a front stop and a lens with a rear stop;
4. Define and illustrate the concept of a chief ray;

5. Determine analytically and graphically the exit pupil, entrance pupil, and aperture stop of for two lenses with a stop placed between them; and,
6. Verify, experimentally, the results obtained above for the system of two lenses with an intermediate stop.

Summary:

Review the main lesson points using the suggested texts listed in the reference section of this module. Hold class discussion and answer student questions.

Next Lesson Assignment: .

MASTER Technical Module (LSR-E5) pertaining to laser beam-expanding collimators.

LSR-E4-HO
Study F-Stops and Apertures
Attachment 1: **MASTER** Handout

Objective(s):

Upon completion of this unit the student will be able to:

a. Determine field stops and aperture stops; and,
b. Determine entrance and exit pupils.

Module Outline:

I. Discuss and Demonstrate Field-stops and Apertures
   A. Determine aperture stops
   B. Determine field stops
   C. Analyze chief rays and marginal rays
   D. Determine entrance and exit windows
   E. Practice and demonstration of skills listed above

II. Determine Entrance and Exit Pupils
   A. Determine entrance pupils
   B. Determine exit pupils
   C. Practice and demonstration of skills listed above

LSR-E4-LE
Study F-Stops and Apertures
Attachment 2: **MASTER** Laboratory Exercise

Successful completion of this technical module will be based on the students' successful completion of the following:

1. Define and label field stops and aperture stops on a diagram;
2. Define entrance and exit pupils on a diagram;
3. Determine analytically and graphically the entrance and exit pupils of a lens with a front stop and a lens with a rear stop;
4. Define and illustrate the concept of a chief ray;
5. Determine analytically and graphically the exit pupil, entrance pupil, and aperture stop of for two lenses with a stop placed between them; and,
6. Verify, experimentally, the results obtained above for the system of two lenses with an intermediate stop.

Rules of Conduct

Students must behave in a professional and responsible manner, observing all laser safety rules as outlined in ANSI-Z136.1, *Safe Use of Lasers*.

LASER MACHINING SERIES

MASTER Technical Module No. LSR-E5

Subject: Laser Machining **Time: 5 Hrs.**

Duty: Apply Concepts of Modern Optics
Task: Use Laser Beam-Expanding Collimators

Objective(s):

Upon completion of this unit the student will be able to:

a. Set-up and demonstrate a simple Keplerian laser beam expander;
b. Set-up and demonstrate Galilean laser beam expander; and,
c. Measure expanding power of each type.

Instructional Materials:

HeNe laser
Ruler
Optical Bench
+10-mm focal length positive lens
+150-mm focal length positive lens
-30 mm focal length negative lens
MASTER Handout (LSR-E5-HO)
MASTER Laboratory Exercise (LSR-E5-LE)
MASTER Laboratory Aid (LSR-E5-LA)

References:

Introduction to Classical and Modern Optics, Meyer-Arendt, Jurgen R., Prentice Hall, Latest Edition

Geometric Optics, CORD Communications, Laser Electro-Optics Series, Latest Edition

ANSI-Z136.1, *Safe Use of Lasers,* Laser Institute of America (Publication No. 106), Latest Edition

Video: ***Introduction to Laser Safety and Laser Hazards Training Module,*** Laser Institute of America, Publication No. 115, Latest Edition

Student Preparation:

Students should have previously completed the following Technical Modules:
LSR-A1 through LSR-A4 "Practice Laser Safety"

LSR-B1 through LSR-B9 "Apply Mathematical Concepts"
LSR-E1 "Study Reflection and Refraction at Plane Surfaces"
LSR-E2 "Perform Imaging With a Single Lens"
LSR-E3 "Perform Imaging With Multiple Lenses"
LSR-E4 "Study F-Stops and Apertures"

Introduction:

A large variety of complex optical systems are currently in use today in the laser industry. This module presents two of the most commonly used optical systems for expanding and collimating a laser beam: the Keplerian beam expander and the Galilean beam expander.

Presentation Outline:

I. Discuss and Demonstrate Laser Beam Expander-Collimators
   A. Describe the set-up of a Keplerian expander-collimator
   B. Describe the set-up of a Galilean expander-collimator
   C. Describe the differences between the two expander-collimators
   D. Determine the expanding power of each type of collimator
   E. Practice and demonstration of skills listed above

Practical Application:

Students will perform selected experiments on the topics listed above from ***Geometric Optics,*** CORD Communications, Latest Edition.

Evaluation and/or Verification:

Successful completion of this technical module will be based on the students' successful completion of the following components:

1. Describe and set-up the two basic types of laser beam expander-collimators;
2. Describe the uses of each;
3. Determine the beam expanding power of each type; and,
4. Practice and demonstration of skills listed above.

Summary:

Review the main lesson points using the suggested texts listed in the reference section of this module. Hold class discussion and answer student questions.

Next Lesson Assignment:

MASTER Technical Module (LSR-E6) pertaining to interference.

LSR-E5-HO
Use Laser Beam-Expanding Collimators
Attachment 1: **MASTER** Handout

Objective(s):

Upon completion of this unit the student will be able to:

a. Set-up and demonstrate a simple Keplerian laser beam expander;
b. Set-up and demonstrate Galilean laser beam expander; and,
c. Measure expanding power of each type.

Module Outline:

I. Discuss and Demonstrate Laser Beam Expander-Collimators
   A. Describe the set-up of a Keplerian expander-collimator
   B. Describe the set-up of a Galilean expander-collimator
   C. Describe the differences between the two expander-collimators
   D. Determine the expanding power of each type of collimator
   E. Practice and demonstration of skills listed above

LSR-E5-LE
Use Laser Beam-Expanding Collimators
Attachment 2: **MASTER** Laboratory Exercise

Successful completion of this technical module will be based on the students' successful completion of the following components:

1. Describe and set-up the two basic types of laser beam expander-collimators;
2. Describe the uses of each;
3. Determine the beam expanding power of each type; and,
4. Practice and demonstration of skills listed above.

Rules of Conduct

Students must behave in a professional and responsible manner, observing all laser safety rules as outlined in ANSI-Z136.1, *Safe Use of Lasers*.

LASER MACHINING SERIES

MASTER Technical Module No. LSR-E6

Subject: Laser Machining **Time: 15 Hrs.**

Duty: Apply Concepts of Modern Optics
Task: Study Interference

Objective(s):

Upon completion of this unit the student will be able to:

a. Demonstrate Young's Double Slit Interference;
b. Understand thin film interference and applications;
c. Determine optical surface flatness by interference; and,
d. Set-up and use a Michelson Interferometer.

Instructional Materials:

HeNe laser
Sodium Lamp
Green light filter
Two optical flats, 4-inch diameter, (1/10 wave flatness)
Microscope slide
Set of double slits (such as Pasco OS-9123)
Laser beam expanding collimator
Two front surface mirrors
Beam splitter
MASTER Handout (LSR-E6-HO)
MASTER Laboratory Exercise (LSR-E6-LE)
MASTER Laboratory Aid (LSR-E6-LA)

References:

Introduction to Classical and Modern Optics, Meyer-Arendt, Jurgen R., Prentice Hall, Latest Edition

Light Sources and Wave Optics, CORD Communications, Laser Electro-Optics Series, Latest Edition

ANSI-Z136.1, *Safe Use of Lasers,* Laser Institute of America (Publication No. 106), Latest Edition

Video: *Introduction to Laser Safety and Laser Hazards Training Module,* Laser Institute of America, Publication No. 115, Latest Edition

Student Preparation:

Students should have previously completed the following Technical Modules:

LSR-A1 through LSR-A4 "Practice Laser Safety"
LSR-B1 through LSR-B9 "Apply Mathematical Concepts"
LSR-E1 "Study Reflection and Refraction at Plane Surfaces"
LSR-E2 "Perform Imaging With a Single Lens"
LSR-E3 "Perform Imaging With Multiple Lenses"
LSR-E4 "Study F-Stops and Apertures"
LSR-E5 "Use Laser Beam-Expanding Collimators"

Introduction:

Light can be represented at several levels of sophistication. The simplest of these is to represent the light by rays. That is the domain of geometrical optics. But, if the wave length of the light can not be neglected in comparison to the dimensions of the system as a whole, we need to take into account the wave nature of light: We need to represent the light by waves. That is the domain of physical optics. In this module, the student will study the phenomenon of interference, which occurs when two or more coherent waves of light superimposed.

Presentation Outline:

I. Discuss and Demonstrate Interference
   A. Discuss the superposition of waves
   B. Demonstrate interference using Young's double-slit experiment
   C. Discuss thin film interference and applications
   D. Demonstrate interference using the Michelson interferometer
   E. Use the Michelson interferometer to measure coherence length of a laser
   F. Use interference to determine surface flatness
   G. Practice and demonstration of skills listed above

Practical Application:

Students will perform selected experiments on the topics listed above from *Light Sources and Wave Optics,* CORD Communications, Latest Edition.

Evaluation and/or Verification:

Successful completion of this technical module will be based on the students' successful completion of the following components:

1. Demonstrate an understanding of superposition of waves by identifying regions of constructive and destructive interference;
2. Use Young's double slit experiment to determine wavelength of light;
3. Demonstrate an understanding of interference by describing how thin films are used as antireflection coatings on optical components;
4. Demonstrate how to use the Michelson interferometer to measure the coherence length of a laser;
5. Determine surface flatness of an optical flat using interference; and,
6. Practice and demonstration of skills listed above.

Summary:

Review the main lesson points using the suggested texts listed in the reference section of this module. Hold class discussion and answer student questions.

Next Lesson Assignment:

MASTER Technical Module (LSR-E7) pertaining to diffraction.

LSR-E6-HO
Study Interference
Attachment 1: **MASTER** Handout

Objective(s):

Upon completion of this unit the student will be able to:

a. Demonstrate Young's Double Slit Interference;
b. Understand thin film interference and applications;
c. Determine optical surface flatness by interference; and,
d. Set-up and use a Michelson Interferometer.

Module Outline:

I. Discuss and Demonstrate Interference
   A. Discuss the superposition of waves
   B. Demonstrate interference using Young's double-slit experiment
   C. Discuss thin film interference and applications
   D. Demonstrate interference using the Michelson interferometer
   E. Use the Michelson interferometer to measure coherence length of a laser
   F. Use interference to determine surface flatness
   G. Practice and demonstration of skills listed above

LSR-E6-LE
Study Interference
Attachment 2: **MASTER** Laboratory Exercise

Successful completion of this technical module will be based on the students' successful completion of the following components:

1. Demonstrate an understanding of superposition of waves by identifying regions of constructive and destructive interference;
2. Use Young's double slit experiment to determine wavelength of light;
3. Demonstrate an understanding of interference by describing how thin films are used as antireflection coatings on optical components;
4. Demonstrate how to use the Michelson interferometer to measure the coherence length of a laser;
5. Determine surface flatness of an optical flat using interference; and,
6. Practice and demonstration of skills listed above.

Rules of Conduct

Students must behave in a professional and responsible manner, observing all laser safety rules as outlined in ANSI-Z136.1, *Safe Use of Lasers*.

LASER MACHINING SERIES

MASTER Technical Module No. LSR-E7

Subject: Laser Machining **Time:** 15 Hrs.

Duty: Apply Concepts of Modern Optics
Task: Study Diffraction

Objective(s):

Upon completion of this unit the student will be able to:

a. Demonstrate and explain Fraunhofer (far field) diffraction;
b. Demonstrate and explain Fresnel (near field) diffraction;
c. Apply Rayleigh's Criterion to determine the limit of resolution of an optical instrument;
d. Measure beam divergence and spot size; and,
e. Use diffraction gratings.

Instructional Materials:

HeNe laser, 1-3mw
Optical Bench
Three optical bench carriers with optical component mounts
Optical power meter
Linear translator
Set of precision apertures:

Single slits:	0.02, 0.04, 0.08, 0.16 mm slit width
Double slits:	slit width 0.04 mm; slit spacing 0.25 mm
Multiple slits:	2,3,4,5 slits with slit width 0.04 mm and slit spacing 0.125 mm
Circular apertures:	0.04, 0.08, 0.150 mm
Square aperture:	0.25 mm x 0.25 mm
Grating:	5276 lines/cm

MASTER Handout (LSR-E7-HO)
MASTER Laboratory Exercise (LSR-E7-LE)
MASTER Laboratory Aid (LSR-E7-LA)

References:

Introduction to Classical and Modern Optics, Meyer-Arendt, Jurgen R., Prentice Hall, Latest Edition

Light Sources and Wave Optics, CORD Communications, Laser Electro-Optics Series, Latest Edition

ANSI-Z136.1, *Safe Use of Lasers,* Laser Institute of America (Publication No. 106), Latest Edition

Video: ***Introduction to Laser Safety and Laser Hazards Training Module,*** Laser Institute of America, Publication No. 115, Latest Edition

Student Preparation:

Students should have previously completed the following Technical Modules:

LSR-A1 through LSR-A4 "Practice Laser Safety"
LSR-B1 through LSR-B9 "Apply Mathematical Concepts"
LSR-E1 "Study Reflection and Refraction at Plane Surfaces"
LSR-E2 "Perform Imaging With a Single Lens"
LSR-E3 "Perform Imaging With Multiple Lenses"
LSR-E4 "Study F-Stops and Apertures"
LSR-E5 "Use Laser Beam-Expanding Collimators"
LSR-E6 "Study Interference"

Introduction:

Light can be represented at several levels of sophistication. The simplest of these is to represent the light by rays. That is the domain of geometrical optics. But, if the wave length of the light can not be neglected in comparison to the dimensions of the system as a whole, we need to take into account the wave nature of light. We need to represent the light by waves. That is the domain of physical optics. In this module, the student will study diffraction and how light "bends" as it passes through a small opening or around the edges of an obstacle. The effects of diffraction become noticeable when the size of the opening or obstacle is on the order of the wavelength of light. Diffraction accounts for the limit of resolution inherent in all optical systems, from a simple lens to a complex imaging system.

Presentation Outline:

I. Discuss and Demonstrate Diffraction
   A. Discuss the differences between an image formed in accordance with geometric optics as opposed to that formed in taking diffraction into consideration
   B. Discuss Huygens-Fresnel diffraction theory
   C. Determine the conditions (distance) for Fresnel (near-field) and Fraunhofer diffraction
   D. Demonstrate the far-field diffraction patterns for several common apertures including a narrow slit, a double slit, a diffraction grating, a rectangular aperture, and a circular aperture

E. Discuss Rayleigh's Criterion and calculate the resolving power of a lens
F. Discuss diffraction-limited optics
G. Explain far-field diffraction of a laser beam
H Calculate the far-field divergence and spot size of a laser beam
I. Practice and demonstration of skills listed above

Practical Application:

Students will perform selected experiments on the topics listed above from ***Light Sources and Wave Optics,*** CORD Communications, Latest Edition.

Evaluation and/or Verification:

Successful completion of this technical module will be based on the students' successful completion of the following components:

1. Explain the meaning of diffraction and give examples;
2. Explain the relationship between wavelength, aperture size, and predict their effect on the diffraction pattern;
3. Distinguish between Fraunhofer and Fresnel diffraction and the conditions for each;
4. Determine qualitatively and quantitatively the far-field diffraction patterns formed by a single slit, two slits, a rectangular aperture, and a circular aperture;
5. Use Rayleigh's Criterion to calculate the resolving power of a lens;
6. Discuss diffraction-limited optics;
7. Calculate the divergence and spot size of a laser beam; and,
8. Practice and demonstration of skills listed above.

Summary:

Review the main lesson points using the suggested texts listed in the reference section of this module. Hold class discussion and answer student questions.

Next Lesson Assignment:

MASTER Technical Module (LSR-E8) pertaining to polarization.

LSR-E7-HO
Study Diffraction
Attachment 1: **MASTER** Handout

Objective(s):

Upon completion of this unit the student will be able to:

a. Demonstrate and explain Fraunhofer (far field) diffraction;
b. Demonstrate and explain Fresnel (near field) diffraction;
c. Apply Rayleigh's Criterion to determine the limit of resolution of an optical instrument;
d. Measure beam divergence and spot size; and,
e. Use diffraction gratings.

Module Outline:

I. Discuss and Demonstrate Diffraction
   A. Discuss the differences between an image formed in accordance with geometric optics as opposed to that formed in taking diffraction into consideration
   B. Discuss Huygens-Fresnel diffraction theory
   C. Determine the conditions (distance) for Fresnel (near-field) and Fraunhofer diffraction
   D. Demonstrate the far-field diffraction patterns for several common apertures including a narrow slit, a double slit, a diffraction grating, a rectangular aperture, and a circular aperture
   E. Discuss Rayleigh's Criterion and calculate the resolving power of a lens
   F. Discuss diffraction-limited optics
   G. Explain far-field diffraction of a laser beam
   H Calculate the far-field divergence and spot size of a laser beam
   I. Practice and demonstration of skills listed above

LSR-E7-LE
Study Diffraction
Attachment 2: **MASTER** Laboratory Exercise

Successful completion of this technical module will be based on the students' successful completion of the following components:

1. Explain the meaning of diffraction and give examples;
2. Explain the relationship between wavelength, aperture size, and predict their effect on the diffraction pattern;
3. Distinguish between Fraunhofer and Fresnel diffraction and the conditions for each;
4. Determine qualitatively and quantitatively the far-field diffraction patterns formed by a single slit, two slits, a rectangular aperture, and a circular aperture;
5. Use Rayleigh's Criterion to calculate the resolving power of a lens;
6. Discuss diffraction-limited optics;
7. Calculate the divergence and spot size of a laser beam; and,
8. Practice and demonstration of skills listed above.

Rules of Conduct

Students must behave in a professional and responsible manner, observing all laser safety rules as outlined in ANSI-Z136.1, *Safe Use of Lasers*.

LASER MACHINING SERIES

MASTER Technical Module No. LSR-E8

Subject: Laser Machining **Time: 10 Hrs.**

Duty: Apply Concepts of Modern Optics
Task: Study Polarization

Objective(s):

Upon completion of this unit the student will be able to:

a. Generate linearly polarized light;
b. Analyze light of unknown polarization;
c. Study the effect of birefringent materials on polarized light; and,
d. Use wave plates/retarders to generate elliptically and circularly polarized light.

Instructional Materials:

Low-power linearly polarized HeNe laser*
Two Linear Polarizers*
Two 1/4 wave plates*
Two rotational stage assemblies*
Photo-electric power meter*
MASTER Handout (LSR-E8-HO)
MASTER Laboratory Exercise (LSR-E8-LE)
MASTER Laboratory Aid (LSR-E8-LA)

* All components available inexpensively from Edmund Scientific, Inc.

References:

Introduction to Classical and Modern Optics, Meyer-Arendt, Jurgen R., Prentice Hall, Latest Edition

Light Sources and Wave Optics, CORD Communications, Laser Electro-Optics Series, Latest Edition

ANSI-Z136.1, *Safe Use of Lasers,* Laser Institute of America (Publication No. 106), Latest Edition

Video: *Introduction to Laser Safety and Laser Hazards Training Module,* Laser Institute of America, Publication No. 115, Latest Edition

Student Preparation:

Students should have previously completed the following Technical Modules:

LSR-A1 through LSR-A4 "Practice Laser Safety"
LSR-B1 through LSR-B9 "Apply Mathematical Concepts"
LSR-E1 "Study Reflection and Refraction at Plane Surfaces"
LSR-E2 "Perform Imaging With a Single Lens"
LSR-E3 "Perform Imaging With Multiple Lenses"
LSR-E4 "Study F-Stops and Apertures"
LSR-E5 "Use Laser Beam-Expanding Collimators"
LSR-E6 "Study Interference"
LSR-E7 "Study Diffraction"

Introduction:

Light can be represented at several levels of sophistication. The simplest of these is to represent the light by rays. That is the domain of geometrical optics. But, if the wave length of the light can not be neglected in comparison to the dimensions of the system as a whole, we need to take into account the wave nature of light. We need to represent the light by waves. That is the domain of physical optics. The polarization of a light wave describes the orientation of its electric field as it propagates through space. In this module, the student will demonstrate how to determine the polarization of a light wave and also how to modify the polarization to obtain linear, circular, and elliptically polarized light.

Presentation Outline:

I. Discuss and Demonstrate Polarization
   A. Linear polarized light
   B. Circularly polarized light
   C. Elliptically polarized light
   D. Production of polarized light by reflection
   E. Production of polarized light by absorption
   F. Production of polarized light by refraction through birefringent crystals
   G. Malus' Law
   H. Wave plates/retarders
   I. Brewster windows
   J. Practice and demonstration of skills listed above

Practical Application:

Students will perform selected experiments on the topics listed above from *Light Sources and Wave Optics,* CORD Communications, Latest Edition.

Evaluation and/or Verification:

Successful completion of this technical module will be based on the students' successful completion of the following components:

1. Understand the difference between natural and polarized light;
2. Discuss and demonstrate the differences between linear, circular, and elliptically polarized light;
3. Discuss the production of polarized light by reflection, absorption, and by refraction through birefringent crystals;
4. Demonstrate the use of 1/4-wave plates for the generation of circularly and elliptically polarized light;
5. Discuss and demonstrate the use of Brewster Windows for producing polarized light in a laser cavity; and,
6. Practice and demonstration of skills listed above.

Summary:

Review the main lesson points using the suggested texts listed in the reference section of this module. Hold class discussion and answer student questions.

Next Lesson Assignment:

MASTER Technical Module (LSR-E9) pertaining to radiometry and photometry.

LSR-E8-HO
Study Polarization
Attachment 1: **MASTER** Handout

Objective(s):

Upon completion of this unit the student will be able to:

a. Generate linearly polarized light;
b. Analyze light of unknown polarization;
c. Study the effect of birefringent materials on polarized light; and,
d. Use wave plates/retarders to generate elliptically and circularly polarized light.

Module Outline:

I. Discuss and Demonstrate Polarization
   A. Linear polarized light
   B. Circularly polarized light
   C. Elliptically polarized light
   D. Production of polarized light by reflection
   E. Production of polarized light by absorption
   F. Production of polarized light by refraction through birefringent crystals
   G. Malus' Law
   H. Wave plates/retarders
   I. Brewster windows
   J. Practice and demonstration of skills listed above

LSR-E8-LE
Study Polarization
Attachment 2: **MASTER** Laboratory Exercise

Successful completion of this technical module will be based on the students' successful completion of the following components:

1. Understand the difference between natural and polarized light;
2. Discuss and demonstrate the differences between linear, circular, and elliptically polarized light;
3. Discuss the production of polarized light by reflection, absorption, and by refraction through birefringent crystals;
4. Demonstrate the use of 1/4-wave plates for the generation of circularly and elliptically polarized light;
5. Discuss and demonstrate the use of Brewster Windows for producing polarized light in a laser cavity; and,
6. Practice and demonstration of skills listed above.

Rules of Conduct

Students must behave in a professional and responsible manner, observing all laser safety rules as outlined in ANSI-Z136.1, *Safe Use of Lasers*.

LASER MACHINING SERIES

MASTER Technical Module No. LSR-E9

Subject: Laser Machining **Time: 5 Hrs.**

Duty: Apply Concepts of Modern Optics
Task: Investigate Radiometry and Photometry

Objective(s):

Upon completion of this unit the student will be able to:

a. Perform optical power measurements;
b. Perform irradiance measurements;
c. Use photoelectric power meters;
d. Perform ambient light suppression;
e. Use attenuators;
f. Perform wavelength calibration;
g. Use radiometric filters;
h. Use photometric filters; and,
i. Use disc calorimeters.

Instructional Materials:

Low-power HeNe laser
Photo-electric power meter with ambient light shade
Disc calorimeter-type laser power meter
Diverging lens
Neutral-density filter, OD = 2.0 (1% transmission)
Large piece of white paper
MASTER Handout (LSR-E9-HO)
MASTER Laboratory Exercise (LSR-E9-LE)
MASTER Laboratory Aid (LSR-E9-LA)

References:

Introduction to Classical and Modern Optics, Meyer-Arendt, Jurgen R., Prentice Hall, Latest Edition
Introduction to Lasers, CORD Communications, Laser Electro-Optics Series, Latest Edition
Light Sources and Wave Optics, CORD Communications, Laser Electro-Optics Series, Latest Edition
ANSI-Z136.1, *Safe Use of Lasers,* Laser Institute of America (Publication No. 106), Latest Edition

Video: *Introduction to Laser Safety and Laser Hazards Training Module,* Laser Institute of America, Publication No. 115, Latest Edition

Student Preparation:

Students should have previously completed the following Technical Modules:

LSR-A1 through LSR-A4 "Practice Laser Safety"
LSR-B1 through LSR-B9 "Apply Mathematical Concepts"
LSR-E1 "Study Reflection and Refraction at Plane Surfaces"
LSR-E2 "Perform Imaging With a Single Lens"
LSR-E3 "Perform Imaging With Multiple Lenses"
LSR-E4 "Study F-Stops and Apertures"
LSR-E5 "Use Laser Beam-Expanding Collimators"
LSR-E6 "Study Interference"
LSR-E7 "Study Diffraction"
LSR-E8 "Study Polarization"

Introduction:

Radiometry is the science of measuring radiant quantities across the electro-magnetic spectrum. Photometry is the portion of radiometry that deals only with the visual portion of the spectrum as perceived by the human eye. In this module we will discuss the measurement of radiometric quantities such as power, power per unit area, intensity, and radiance. We will examine the basic operating theory, procedures, and precautions for making accurate measurements using the two basic types of power meters: the photoelectric and disc calorimeter. Optical filters and their applications will also be examined.

Presentation Outline:

I. Discuss and Demonstrate Radiometric and Photometric Principles
   A. Radiometric and photometric quantities
   B. Solid angle measurement
   C. Power and irradiance measurements of a laser beam using photoelectric and disc calorimeter-type power meters
   D. Radiometric and photometric filters for light attenuation
   E. The use of attenuators for ambient light suppression
   F. The use of wavelength calibration curves
   G. Determination of optical density
   H. Practice and demonstration of skills listed above

Practical Application:

Students will perform selected experiments on the topics listed above from *Introduction to Lasers,* CORD Communications, Latest Edition.

Evaluation and/or Verification:

Successful completion of this technical module will be based on the students' successful completion of the following components:

1. Define and differentiate between radiometric and photometric quantities;
2. Define and calculate solid angle;
3. Perform power and irradiance measurements of a laser beam using; photoelectric and disc calorimeter-type power meters;
4. Explain and demonstrate and use radiometric and photometric filters for light attenuation;
5. Explain and demonstrate and use attenuators for ambient light suppression;
6. Explain and demonstrate and use wavelength calibration curves;
7. Determine optical density of a filter; and,
8. Practice and demonstration of skills listed above.

Summary:

Review the main lesson points using the suggested texts listed in the reference section of this module. Hold class discussion and answer student questions.

Next Lesson Assignment:

MASTER Technical Module (LSR-F1) dealing with applying machine specific nomenclature and terminology.

LSR-E9-HO
Investigate Radiometry and Photometry
Attachment 1: **MASTER** Handout

Objective(s):

Upon completion of this unit the student will be able to:

a. Perform optical power measurements;
b. Perform irradiance measurements;
c. Use photoelectric power meters;
d. Perform ambient light suppression;
e. Use attenuators;
f. Perform wavelength calibration;
g. Use radiometric filters;
h. Use photometric filters; and,
i. Use disc calorimeters.

Module Outline:

I. Discuss and Demonstrate Radiometric and Photometric Principles
   A. Radiometric and photometric quantities
   B. Solid angle measurement
   C. Power and irradiance measurements of a laser beam using photoelectric and disc calorimeter-type power meters
   D. Radiometric and photometric filters for light attenuation
   E. The use of attenuators for ambient light suppression
   F. The use of wavelength calibration curves
   G. Determination of optical density
   H. Practice and demonstration of skills listed above

Successful completion of this technical module will be based on the students' successful completion of the following components:

1. Define and differentiate between radiometric and photometric quantities;
2. Define and calculate solid angle;
3. Perform power and irradiance measurements of a laser beam using; photoelectric and disc calorimeter-type power meters;
4. Explain and demonstrate and use radiometric and photometric filters for light attenuation;
5. Explain and demonstrate and use attenuators for ambient light suppression;
6. Explain and demonstrate and use wavelength calibration curves;
7. Determine optical density of a filter; and,
8. Practice and demonstration of skills listed above.

Rules of Conduct

Students must behave in a professional and responsible manner, observing all laser safety rules as outlined in ANSI-Z136.1, *Safe Use of Lasers*.

MASTER

a consortium of educators and industry

EDUCATIONAL RESOURCES FOR THE MACHINE TOOL INDUSTRY

Laser Machining Series

INSTRUCTOR'S HANDBOOK

DUTIES F THROUGH J

Supported by the National Science Foundation's Advanced Technological Education Program

ERIC

Laser Machinist .... apply the principles of electronics, lasers, optics, materials, engineering documentation, CAD/CAM, and systems integration to manufacture products following current industry and company standards.

Duties	Tasks												
A Practice Laser Safety	A-1 Discuss laser safety standards	A-2 Discuss basic laser principles	A-3 Discuss laser hazards	A-4 Discuss control measures									
B Apply Mathematical Concepts	B-1 Perform basic mathematical functions	B-2 Perform algebraic functions	B-3 Study exponents and right triangle geometry	B-4 Study elements of plane and solid geometry	B-5 Perform data evaluation and statistical analysis	B-6 Perform proportioning and interpolation	B-7 Perform basic trigonometric calculations	B-8 Investigate vectors and vector systems	B-9 Investigate the Cartesian Coordiante System				
C Perform Measurement and Inspection	C-1 Study basics of metrology	C-2 Select instruments used for measurement	C-3 Study datums and the three plane concept	C-4 Select gauging tools	C-5 Use CMM for location of features	C-6 Perform measurements for orientation tolerances	C-7 Perform measurment by optical comparison	C-8 Perform measurements for circularity, concentricity, runout, and straightness tolerances	C-9 Investigate advanced metrology topics				
D Troubleshoot Industrial Electronics and Control	D-1 Perform DC voltage, current, and power measurements	D-2 Perform AC voltage, current, and power measurements	D-3 Investigate digital logic systems	D-4 Investigate diode applications	D-5 Investigate transistors and thyristors	D-6 Investigate operational amplifiers	D-7 Investigate power supply circuits						
E Apply Concepts of Modern Optics	E-1 Study reflection and refraction at plane surfaces	E-2 Perform imaging with a single lens	E-3 Perform imaging with multiple lenses	E-4 Study F-stops and apertures	E-5 Use laser beam-expanding collimators	E-6 Study interference	E-7 Study diffraction	E-8 Study polarization	E-9 Investigate radiometry and photometry				
F Perform CNC Machining	F-1 Apply machine specific nomenclature and terminology	F-2 Investigate the Cartesian coordinate system as applied to a CNC mill or laser	F-3 Apply CNC programming language	F-4 Perform start up, tool changing, and ending of programs	F-5 Perform positioning and basic drilling	F-6 Create a sub-program	F-7 Perform contouring	F-8 Apply tool radius compensation	F-9 Perform program preparation	F-10 Apply special laser coding parameters			
G Investigate Industrial Laser Systems	G-1 Review characteristics of light	G-2 Investigate emission and absorption of light	G-3 Discuss optical cavities and laser modes	G-4 Discuss temporal characteristics of lasers	G-5 Investigate spatial characteristics of lasers	G-6 Discuss laser classifications and characteristics							
H Perform Computer-Aided Drafting (CAD)	H-1 Discuss and understand PC basics	H-2 Discuss CAD basics and file management	H-3 Use drawing settings	H-4 Perform basic editing commands	H-5 Create drawings with accuracy	H-6 Organize drawing information	H-7 Control the display of drawings	H-8 Use intermediate drawing commands	H-9 Perform intermediate editing commands	H-10 Create multi view drawings	H-11 Create sectioned drawings	H-12 Investigate basic dimensioning	H-13 Perform advanced dimensioning
	H-14 Use and manipulate blocks	H-15 Use blocks to automate the drawing process											
I Perform Laser Materials Processing	I-1 Review laser safety standards	I-2 Discuss lasers used for materials processing	I-3 Discuss laser optics and beam characteristics	I-4 Investigate absorption of laser energy	I-5 Use lasers for welding and surface treatment	I-6 Use lasers for material removal							
J Perform Computer-Aided Manufacturing (CAM)	J-1 Discuss and understand the basics of a PC based CAM system	J-2 Discuss basic CAM operations	J-3 Set up cutting tools	J-4 Create simple part profiles	J-5 Create and edit complex part profiles	J-6 Perform roughing, drilling, and counterboring	J-7 Advanced editing of part profiles	J-8 Edit tool paths	J-9 Use construction layers in SmartCAM	J-10 Perform user commands and machine events	J-11 Create families of parts	J-12 Perform CAD/CAM integration	J-13 Perform code generation

L&B PM4
040698

LASER MACHINING SERIES

MASTER Technical Module No. LSR-F1

Subject: Laser Machining **Time: 7.5 Hrs.**

Duty: Perform CNC Machining
Task: Apply Machine Specific Nomenclature and Terminology

Objective(s):

Upon completion of this unit the student will be able to:

a. Discuss CNC machine specifications;
b. Start up the machine;
c. Operate the machine's keyboard and function keys;
d. Establish radius offsets;
e. Perform programming basics at the MCU (machine control unit);
f. Prove out a program; and,
g. Load and run a part program.

Note: A Matsuura MC-500V2 CNC milling machine with Yasnac MX1 controller will be used as a typical CNC machine.

Instructional Materials:

Matsuura MC-500V2 CNC milling machine
Yasnac MX1 Controller
MASTER Handout (LSR-F1-HO1)
MASTER Handout (LSR-F1-HO2) (Matsuura machine specifications)
MASTER Handout (LSR-F1-HO3) (Yasnac controller specifications)
MASTER Laboratory Exercise (LSR-F1-LE)
MASTER Laboratory Aid (LSR-F1-LA)

Because we are allowing the instructor to create their own program, we do not need to specify specific tooling. The instructor should write a CNC program using those detailed in *Computer Numerical Control: Concepts and Programming* as a guide.

Note: LSR-F1-HO2 and LSR-F1-HO3 are summary sheets created from the manuals for the Matsuura machine. The MASTER consortium recommends that the instructor produce similar handouts for the CNC machinery that will be used.

References:

Learning Computer Numerical Control, Janke, Michael, Delmar Publishing, Latest Edition

CNC Technology and Programming, Krar, Steve, McGraw-Hill Publishing, Latest Edition

Computer Numerical Control, Kief, Hans B., Glencoe Publishing, Latest Edition

Fundamentals of Numerical Control, Luggen, William W., Delmar Publishing, Latest Edition

CNC: A First Look Primer, Luggen, William W., Delmar Publishing, Latest Edition

Computer Numerical Control Programming, Sava, Michael, Prentice Hall Publishing, Latest Edition

Computer Numerical Control: Concepts and Programming, Seames, Warren S., Delmar Publishing, Latest Edition

Student Preparation:

Students should have previously completed the following Technical Modules:

LSR-A1 through LSR-A4 "Practice Laser Safety"
LSR-B1 through LSR-B9 "Apply Mathematical Concepts"

Introduction:

CNC programming involves an understanding of machining, computers, materials, and part processing. Computer controlled machinery is rapidly replacing manually operated machinery to ensure consistent part quality, efficient part processing, reduced personnel requirements, and lends itself to total factory automation. With this increase in CNC usage, industry is requiring an increase in personnel who are knowledgeable about and able to program the machine tool to produce parts to blue print requirements. In this module, the student will demonstrate an understanding of the terminology and nomenclature used for a typical CNC machine. Coverage includes hands-on loading and running of a typical CNC program.

Presentation Outline:

I. Discuss and Apply Machine Nomenclature and Terminology
   - A. Study machine specifications
   - B. Start up the machine
   - C. Study the machine's keyboard and function keys
   - D. Establish radius offsets
   - E. Study programming basics at the MCU (Machine control unit)
   - F. Prove out a program

G. Load and run a part program

Practical Application:

Students will observe and participate in the laboratory demonstration and discussion of the topics listed above. Following the demonstrations, students will load and run the program assigned by the instructor.

Evaluation and/or Verification:

Successful completion of this technical module will be based on the students' successful completion of the following components:

1. Demonstrate an understanding of machine specifications;
2. Start up the machine;
3. Operate the machine's keyboard and function keys;
4. Establish radius offsets;
5. Perform programming basics at the MCU (machine control unit);
6. Prove out a program; and,
7. Load and run a part program.

Summary:

Review the main lesson points using the suggested text listed in the reference section of this module. Hold class discussion and answer student questions.

Next Lesson Assignment:

MASTER Technical Module (LSR-F2) pertaining to the investigation of the Cartesian coordinate system as applied to a CNC mill or laser.

LSR-F1-HO1
Apply Machine Specific Nomenclature and Terminology
Attachment 1: **MASTER** Handout No. 1

Objective(s):

Upon completion of this unit the student will be able to:

a. Discuss CNC machine specifications;
b. Start up the machine;
c. Operate the machine's keyboard and function keys;
d. Establish radius offsets;
e. Perform programming basics at the MCU (machine control unit);
f. Prove out a program; and,
g. Load and run a part program.

Note: A Matsuura MC-500V2 CNC milling machine with Yasnac MX1 controller will be used as a typical CNC machine.

Module Outline:

I. Discuss and Apply Machine Nomenclature and Terminology
   A. Study machine specifications
   B. Start up the machine
   C. Study the machine's keyboard and function keys
   D. Establish radius offsets
   E. Study programming basics at the MCU (Machine control unit)
   F. Prove out a program
   G. Load and run a part program

1-2-1
Table

Table work area	380 x 865 mm (14.96" x 34.06")
Table T slots	18 mm x 3 (11/16" x 3) on 10 mm (4") centers
Work weight on table	250 kgs (550 lbs)

1-2-2
Travel and range

Longitudinal (X) axis	510 mm (20")
Cross (Y) axis	360 mm (14.1")
Vertical (Z) axis	450 mm (17.7")
Distance from table top to spindle end	150-60 mm (5.9-23.622")
Distance from spindle center to column guideway	410 mm (16.1")

1-2-3
Spindle

Spindle nose specification	Matsura standard no. 35
Spindle speeds available	40-400 rpm 60-600 rpm 100-1000 rpm S: 4 digit direct rpm input Standard (electrical)

1-2-4
Feedrate

Rapid traverse - X/Y	15000 mm/min. (590")
-Z	12000 mm/min. (472")
Cutting feedrate by tape	1-500 mm/min. (0.1 - 196.8 ins./min.)
Manual continuous feedrate	0 - 300 mm/min. (0-78.8 ins./min. in 25 steps

1-2-5
Motors

Main spindle motor (AC frequency motor)	AC 3.7/5.5 Model EEVA-51KM

Coolant pump motor	* 0.25 KW, 2 poles, 3 phase
Lubrication pump motor for slideways	0.85/0.85 /1. KW
Axis feed motors (X/Y/Z)	0.45KW
Spindle oil cooler motor (Option)	*N.B. Machine no. 8305

1-2-6

Automatic Tool Changer

Number of tools	20
Tool selection	Random by address code, bi-direction rotation of magazine
Tool holder specification	Matsura standard
Pullstud specification	Matsura standard
Max. adjacent tool diameter	76 mm dia. 20 tools
Tool diameter	15 mm
Max. tool weight	6 kgs
Max. tool length	250 mm

1-2-7

Dimensions & Weight

Machine height	2569 mm
Required Floor space	2990 (W) x 2290 (D)
Machine weight with NC unit	36000 kgs (7940 lbs)

1-2-8

Input Power

AC200/220V +/-10%, 3 phase
50/60 Hz +/-1Hz, 15 KVA
(except above, a transformer is required)

1-2-9

Air Source

5K gf/cm2

1-2-10

Standard accessories include:

- Operation tools in a box
- Leveling bolts, pads and nuts
- Coolant unit
- Spindle speed tachometer and load meter
- One set of spare parts
- Pre-wired 4th axis
- Lubrication unit

Matsuura MC-500V2 with Yasnac MX1 controls (operations)

Function Keys and Other MDI Keyboard Components

"ALM" (Alarm) - 3 pages at CRT
1. Alarm and Users Messages
2. Timer Display
   In any "Mode," press "ALM" and page up or down to Timer Display.
   To zero out, key in # and "ORG."
3. Program Number Directory and characters remaining in storage.

"DGN" (Diagnostics) - Used for troubleshooting - technician only.

"PRM" (Parameters) - Defines limits and capabilities of machine.Generally not changed.
Listed in the Yasnac Manual starting on page
To change parameters: MDI, set Systems switch at tape door to # l, and proceed.

"SET" (Settings) - Parameters that are more accessible for change.
To change settings, do not use systems switch as with "PERM"

"COM" (Command) - Three pages of display, only.
1. Current or last program information.
2. Sub-Program Nesting
3. Offsets in Force.

"PROG" (Program) - MDI, Memory, Edit.
"Pos" (Position)
"LSK" on screen is to skip over manual readable messages on tape.

Position Screen

"Universal" means from "Part Zero."
"Increment" means distance to go.
"External" allows to zero display.

"OFS" (Offsets) H(D) 00-99

"**MEM" DATA**" is used in conjunction with outside source.

ERIC

OUT can be used with PC
IN can be used with PC
VER for Tape only

A.T.C.
"Tool Unclamp" allows mounting or release of toolholders at spindle.

Connector for PC; Std. RS232; male DB25 Pin

Mach Lock
M.S.T. >> these are not frequently used.
Z-FEED>> In so doing, can easily lose position.

"Zero Return" in "Jog" or "Rapid" only to return Machine Home.

"Next" for merging tape info. to end of existing program.

54 N/A, G53 - Yes! in G90, G28 always in G91, 60-6000 RPM,

No cutter Compensation in MDI, MDI will accept more than a word.

Machine Start Up and Return Z. Y & Z to Home Position

1. Turn on Air (rear of machine)
2. Main Power Switch (left side of machine)
3. Emergency Reset --- (front panel) Pull out
4. Power Button -- (front panel) Press Twice
5. Turn the Feed override selector switch to 25%
6. To return X, Y, & Z to the home position --- Select "prog" function from keypad,
   Select MDI, type G91 G28 X0 Y0 Z0 depress the "wr" key, now depress Cycle Start.
   (; do not use the end of block command for this operation)
7. Turn the spindle on to worm up.
   MDI mode type S600 M3; depress the "wr" keypad, Cycle Start

Mounting Tools

One method of mounting tools is to:
"Magazine Down" - requires "spindle keylock" (M19). Be in any manual "Mode" and use "Magazine CW."

Best method of loading tools is to:
1. Mount cutting tools in respective holders apart from machine.
2. Call T01 in MDI.
3. Mount T0l in spindle using "ToolUnclamp."

4. Call T02, M6, EOB, WR, Cycle Start. Tool changer will extract T01 from spindle; magazine will index to position 2 in preparation for T02.
5. Mount T02 in spindle using "Tool Unclamp."
6. Etc.

Establishing Origin Point (Part Zero)

D98 is assigned to the "X" axis, D99 is assigned to the "Y" axis

1. With edge finder, locate part edge along "X"-axis. (use handle)
2. With edge finder in contact with the part depress the "pos" function on the machine screen
   (Record on a piece of paper the current machine position of "X" from the position screen menu.)
3. Retract "Z" axis above part then compensate for the radius of the edge finder
   (You will add the .100 to the recorded amount on the paper then move the machine to that coordinate observing the numerical values from the machine "pos" screen)
4. Selector switch to MDI, Select "OFS" keypad enter X value from "pos" screen also D98 WR.
   An example: -5.4677 D98 then hit the "WR" key
5. With edge finder, locate part edge along "Y"-axis. (use handle)
6. With edge finder in contact with the part depress the "pos" function keypad.
   (Record on a piece of paper the current position of "Y.")
7. Retract "Z" axis above par then compensate for the radius of the edge finder
   (Add the.100 to the recorded amount on the paper. Move the machine to that coordinate observing the numerical values from the function "pos" screen)
8. Mode switch to MDI, Select "OFS" function, enter Y value from "pos" screen also D99 WR.
   An example: -3.9373 D99 then hit the "WR" key

Establishing Tool Length Offsets or "H" Offsets Using "T.L.M."

1. With machine spindle at Z0 (Home) and in any manual Mode, press "Measurement."
2. Select Offset function, curse to appropriate offset number.(corresponding to the tool number, "H" offset register)
3. Using handle, bring T01 to work surface establish "Part-Zero" with feeler gage
4. Press "write" key, Spindle will return to "Home" (Z0) .
5. Call T02 (T2 M6 "WR" Cycle start) and repeat steps 2 - 4.
6. Continue for all tools.
7. When done, turn off "Measurement."

"ORG" cancels previous Offset Values.

Sample "H" values

H01 -15.0671
H02 -9.2420

Establishing Radius Offsets (For Cutter Comp.)

D23 for endmill. Enter actual radius in appropriate offset register.
An example: (.233)

Load a New Program

1. Select "ALM" function keypad --- page down 2 times to view existing program numbers.
2. Mode switch to edit
3. Select "PROG" function
4. Type the letter "O" followed by the program number
5. Depress the "WR" keypad (This will establish your program number)
6. Enter your line numbers and end your lines with an "EOB" ";"
7. Located under the "EDIT" section of the keypad depress "INSERT" to insert the line
8. Repeat the process for the remaining lines

Load an Existing Program

1. Select "ALM" function --- page down 2 times to view existing program numbers
2. Mode switch to edit mode
3. Select "PROG" function
4. Type the letter "O" followed by the program number which you want to load
5. Depress the "Curser Down" keypad to load the existing program

View a Loaded Program

1. Mode switch to edit
2. Depress "Page down" keypad

Erase an Entire Line of Information

1. Mode switch to edit
2. Hit the "EOB" key then "ERASE"

Call up a Specific Tool

1. Selector switch to "MDI"
2. Type the tool number, M6 ; then "WR" keypad
3. Cycle start

To Check the Program Library

Select the "ALARM" keypad. Page down two times. This will give you a list of progarms.

To Erase a Program from Memory

Select the "ALARM" keypad. Page down two times. Call out the program to be erased and select the erase keypad located under the "EDIT" touchpad.

Set up for SmartCAM Machine to Receive a Program

Current machine parameters

COM PORT # 1
BAUD RATE 4800
PARITY >>> EVEN
DATA BITS 7
STOP BITS 1
Xon / X off ENABLE

On the Matsuura

1. Plug in the RS232 cable
2. Mode switch to "EDIT"
3. Edit lock key switch set to the "OFF" position
4. "Function Keypad" set to "Program"
5. Depress the "RESET BUTTON" (TOP RIGHT ON CONTROLLER)
6. "MEM DATA" select "IN"

In SmartCam

Main Menu >> Communicate

1. SET_COM (pick the file to emulate MAT.SC)
2. TO_MACHINE (pick the file to send)

On the Matsuura

Depress the "RESET BUTTON"

To change the baud rate on Matsuura (see pg 197 baud rate in the Yasnac manual)

1. Parm keypad
2. Change control inside side door to # 1

3. Page down until you reach parameter # 6026
4. Hit the insert key after paging to the correct parameter (this places the curser inside the parameter #, use the curser up/down touchpad to move to the correct position)
5. To change a parameter number >> type the new number and hit the insert keypad.

To Change the Baud Rate in SmartCAM

1. Edit plus
2. Call file C:\sm6\Mach.SC
3. File read
4. File Edit >> Make your changes

To Import a File into the Matsuura Without SmartCAM

Copy (file name without an extension) Com 1

To Set The Mode Of Transfer

C:\Mode Com 1:4800,E, 1,N

To Export a Program

Repeat the Same Process as per Page # 5 Notes
Step # 6 "Mem Data" select "OUT"

To Run DNC

1. Mode Switch >> Tape
2. Hit the cycle start button
3. Send the program in through SmartCam (Note: The only thing displayed on the CRT will be the line numbers!!!)

Prove out a Program

To call up a program or sub-program: Enter program #, press cursor down.

1. Mode Switch in "Memory."
2. Enter Program Number and curse down.
3. Engage "Single Block" and "Dry Run."
4. Drop Feed Rate to Zero.
5. "Cycle Start"

Observations to improve program:

* A Spot Drill is better than C'drill; maybe big enough to accommodate C'sink.
* When tapping, never use "Dry Run." It's do or die.
* PERM (Parameters 6211 for G73 and 6213 for G83) for retract are presently set for .05..

LSR-F1-LE
Apply Machine Specific Nomenclature and Terminology
Attachment 4: **MASTER** Laboratory Exercise

Successful completion of this technical module will be based on the students' successful completion of the following components:

1. Demonstrate an understanding of machine specifications;
2. Start up the machine;
3. Operate the machine's keyboard and function keys;
4. Establish radius offsets;
5. Perform programming basics at the MCU (machine control unit);
6. Prove out a program; and,
7. Load and run a part program.

Rules of Conduct

1. Absolutely no horseplay or practical joking will be tolerated.
2. Do not talk to anyone who is operating a machine.
3. Walk only in the designated traffic lanes.
4. Dress appropriately; at the absolute minimum, you must have:
   a. No loose clothing, including ties;
   b. Long hair properly stowed;
   c. No jewelry;
   d. Hard, closed-toe shoes;
   e. Eye protection (safety glasses); and,
   f. Ear protection (plugs or headset).
5. Follow all institutional safety rules.

LASER MACHINING SERIES

MASTER Technical Module No. LSR-F2

Subject: Laser Machining **Time:** 6.5 Hrs.

Duty: Perform CNC Machining
Task: Investigate the Cartesian Coordinate System as Applied to a CNC Mill or Laser

Objective(s):

Upon completion of this unit the student will be able to:

a. Discuss the Cartesian coordinate system;
b. Discuss the basics of a coordinate measurement system;
c. Plot points in an XYZ coordinate system;
d. Set (G90) and program in absolute coordinates; and,
e. Set (G91) and program in incremental coordinates.

Note: A Matsuura MC-500V2 CNC milling machine with Yasnac MX1 controller will be used as a typical CNC machine.

Instructional Materials:

Matsuura MC-500V2 CNC milling machine
Yasnac MX1 Controller
Video: *CMM Inspection for the Shop Floor: Coordinate Measurement Machines,* Tape 1, Society of Manufacturing Engineers, Latest Edition
MASTER Handout (LSR-F2-HO1)
MASTER Handout (LSR-F2-HO2) (CNC Programming and Machine Definitions)
MASTER Laboratory Exercise (LSR-F2-LE)
MASTER Laboratory Aid (LSR-F2-LA)

References:

Learning Computer Numerical Control, Janke, Michael, Delmar Publishing, Latest Edition
CNC Technology and Programming, Krar, Steve, McGraw-Hill Publishing, Latest Edition
Computer Numerical Control, Kief, Hans B., Glencoe Publishing, Latest Edition

Fundamentals of Numerical Control, Luggen, William W., Delmar Publishing, Latest Edition

CNC: A First Look Primer, Luggen, William W., Delmar Publishing, Latest Edition

Computer Numerical Control Programming, Sava, Michael, Prentice Hall Publishing, Latest Edition

Computer Numerical Control: Concepts and Programming, Seames, Warren S., Delmar Publishing, Latest Edition

Student Preparation:

Students should have previously completed the following Technical Modules:

LSR-F1 "Apply Machine Specific Nomenclature and Terminology"

Introduction:

CNC programming involves an understanding of machining, computers, materials, and part processing. Computer controlled machinery is rapidly replacing manually operated machinery to ensure consistent part quality, efficient part processing, reduced personnel requirements, and lends itself to total factory automation. With this increase in CNC usage, industry is requiring an increase in personnel who are knowledgeable about and able to program the machine tool to produce parts to blue print requirements. In this module, the student will demonstrate an understanding of the Cartesian coordinate system as applied to a typical CNC machine. The operation of a Coordinate measurement machine will be used to aid in the understanding of the XYZ coordinate system. In addition, the student will learn the difference between absolute and incremental programming.

Presentation Outline:

I. Investigate the Cartesian Coordinate System as Applied to a CNC Mill and Laser
   - A. Study the Cartesian coordinate system
   - B. Study the basics of a coordinate measurement system
   - C. Plot points in an XYZ coordinate system
   - D. Set (G90) and program in absolute coordinates
   - E. Set (G91) and program in incremental coordinates

Practical Application:

Students will observe and participate in the discussion of the topics listed above. Following the demonstrations, students will complete exercises assigned by the instructor.

Evaluation and/or Verification:

Successful completion of this technical module will be based on the student's successful completion of the following components:

1. Demonstrate an understanding of the Cartesian coordinate system;
2. Discuss the basics of a coordinate measurement system;
3. Plot points in an XYZ coordinate system;
4. Set (G90) and program in absolute coordinates; and,
5. Set (G91) and program in incremental coordinates.

Summary:

Review the main lesson points using the suggested text listed in the reference section of this module. Hold class discussion and answer student questions.

Next Lesson Assignment:

MASTER Technical Module (LSR-F3) pertaining to the application of CNC programming language.

LSR-F2-HO1
Investigate the Cartesian Coordinate System as Applied to a CNC Mill or Laser
Attachment 1: **MASTER** Handout No. 1

Objective(s):

Upon completion of this unit the student will be able to:

a. Discuss the Cartesian coordinate system;
b. Discuss the basics of a coordinate measurement system;
c. Plot points in an XYZ coordinate system;
d. Set (G90) and program in absolute coordinates; and,
e. Set (G91) and program in incremental coordinates.

Note: A Matsuura MC-500V2 CNC milling machine with Yasnac MX1 controller will be used as a typical CNC machine.

Module Outline:

I. Investigate the Cartesian Coordinate System as Applied to a CNC Mill and Laser
   A. Study the Cartesian coordinate system
   B. Study the basics of a coordinate measurement system
   C. Plot points in an XYZ coordinate system
   D. Set (G90) and program in absolute coordinates
   E. Set (G91) and program in incremental coordinates

LSR-F2-HO2
Investigate the Cartesian Coordinate System as Applied to a CNC Mill or Laser
Attachment 2: **MASTER** Handout No. 2

CNC Programming and Machine Definitions

Machine Home: Farthest possible axis travel in the X+, Y+, and Z+ directions.

Part Zero or Origin Point: The intersection of the X, Y, & Z axes.

Offset register: A numbered storage location (1 through 99) in which you may store only one numeric value. Offset registers are used for numeric values not known at the time of programming.

Absolute (G90): Defining endpoints of motion in terms of Part Zero

Incremental (G91): Defining endpoints of motion in terms of present location. The present location is X0, Y0.

Modal: Describes a code which remains effective until canceled (or updated) by a code of the same type or "group" (G codes only).

Non-Modal: Describes a code that is effective only for the "block" (or line in which that code is being programmed; sometimes known as a "one-shot code).

LSR-F2-LE
Investigate the Cartesian Coordinate System as Applied to a CNC Mill or Laser
Attachment 3: **MASTER** Laboratory Exercise

Successful completion of this technical module will be based on the student's successful completion of the following components:

1. Demonstrate an understanding of the Cartesian coordinate system;
2. Discuss the basics of a coordinate measurement system;
3. Plot points in an XYZ coordinate system;
4. Set (G90) and program in absolute coordinates; and,
5. Set (G91) and program in incremental coordinates.

Rules of Conduct

1. Absolutely no horseplay or practical joking will be tolerated.
2. Do not talk to anyone who is operating a machine.
3. Walk only in the designated traffic lanes.
4. Dress appropriately; at the absolute minimum, you must have:
   a. No loose clothing, including ties;
   b. Long hair properly stowed;
   c. No jewelry;
   d. Hard, closed-toe shoes;
   e. Eye protection (safety glasses); and,
   f. Ear protection (plugs or headset).
5. Follow all institutional safety rules.

LASER MACHINING SERIES

MASTER Technical Module No. LSR-F3

Subject: **Laser Machining** **Time: 6.5 Hrs.**

Duty: **Perform CNC Machining**
Task: Apply CNC Programming Language

Objective(s):

Upon completion of this unit the student will be able to:

a. Discuss word-address and variable block formats;
b. Discuss standard programming formats such as FANUC; and,
c. Discuss the concept of modal addresses.

Note: A Matsuura MC-500V2 CNC milling machine with Yasnac MX1 controller will be used as a typical CNC machine.

Instructional Materials:

Matsuura MC-500V2 CNC milling machine
Yasnac MX1 Controller
MASTER Handout (LSR-F3-HO1)
MASTER Handout (LSR-F3-HO2) (CNC Programming Language Definitions)
MASTER Handout (LSR-F3-HO3) (Commonly Used Letter Addresses that are Modal)
MASTER Laboratory Exercise (LSR-F3-LE)
MASTER Laboratory Aid (LSR-F3-LA)

References:

Learning Computer Numerical Control, Janke, Michael, Delmar Publishing, Latest Edition
CNC Technology and Programming, Krar, Steve, McGraw-Hill Publishing, Latest Edition
Computer Numerical Control, Kief, Hans B., Glencoe Publishing, Latest Edition
Fundamentals of Numerical Control, Luggen, William W., Delmar Publishing, Latest Edition
CNC: A First Look Primer, Luggen, William W., Delmar Publishing, Latest Edition

Computer Numerical Control Programming, Sava, Michael, Prentice Hall Publishing, Latest Edition

Computer Numerical Control: Concepts and Programming, Seames, Warren S., Delmar Publishing, Latest Edition

Student Preparation:

Students should have previously completed the following Technical Modules:

LSR-F2 "Investigate the Cartesian Coordinate System as Applied to a CNC Mill or Laser"

Introduction:

CNC programming involves an understanding of machining, computers, materials, and part processing. Computer controlled machinery is rapidly replacing manually operated machinery to ensure consistent part quality, efficient part processing, reduced personnel requirements, and lends itself to total factory automation. With this increase in CNC usage, industry is requiring an increase in personnel who are knowledgeable about and able to program the machine tool to produce parts to blue print requirements. In this module, the student will demonstrate an understanding of the CNC programming language system as applied to a typical CNC machine by studying word address and variable block formats with emphasis on Fanuc controllers. In addition, modal address concepts are presented.

Presentation Outline:

I. Discuss and Apply the CNC Programming Language
   - A. Study word-address and variable block formats
   - B. Study standard programming formats such as FANUC
   - C. Study the concept of modal addresses

Practical Application:

Students will observe and participate in the discussion of the topics listed above.

Evaluation and/or Verification:

Successful completion of this technical module will be based on the students' successful completion of the following components:

1. Demonstrate an understanding of word-address and variable block formats;
2. Demonstrate an understanding of standard programming formats such as FANUC; and,
3. Discuss the concept of modal addresses.

Summary:

Review the main lesson points using the suggested text listed in the reference section of this module. Hold class discussion and answer student questions.

Next Lesson Assignment:

MASTER Technical Module (LSR-F4) pertaining to performing start up, tool changing, and ending of CNC programs.

LSR-F3-HO1
Apply CNC Programming Language
Attachment 1: **MASTER** Handout No. 1

Objective(s):

Upon completion of this unit the student will be able to:

a. Discuss word-address and variable block formats;
b. Discuss standard programming formats such as FANUC; and,
c. Discuss the concept of modal addresses.

Note: A Matsuura MC-500V2 CNC milling machine with Yasnac MX1 controller will be used as a typical CNC machine.

Module Outline:

I. Discuss and Apply the CNC Programming Language
   A. Study word-address and variable block formats
   B. Study standard programming formats such as FANUC
   C. Study the concept of modal addresses

CNC Programming Language Definitions

Address:

A letter coded storage area for a piece of numerical data. Each "letter-address" allows the control to perform a specific kind of function. Each "letter-address" will accept only numeric information according to a specific format or form.

Leading Zero:

Place holding zero which precedes the first significant numeral in a "word." May be omitted on all letter addresses.

Trailing Zeros:

Place holding zeros which follow the last significant numeral in a "word." Omit only when a decimal point is used.

so: X-0001.2500 can be written: Z-1.25

X-125 means X-.0125; here we see the value of not forgetting the decimal.

Word:

Consists of one "letter address" followed by at least one numeral.
Example: G80

Block:

One or more "words" followed by an "end of block" code, denoted by the semicolon symbol (also called an "EOB" code).

Variable:

Indicates that a "block" allows programming of "words" in no specific order.

Example:
N20 G43 Z___H___T___;
could be written : T___H___Z___N20G43;

The entire line is read first, then executed.

Traditional word order:

N___G___G___X___Y___Z___F___M___S___T___;

Note: Normally, a tool would be called on a separate line, but with a double-arm tool changer, "T" may appear with such words.

Program:

A sequential listing of a "blocks" preceded by "O___" (program number) and followed by an M30 or M99 code (sub program).

Commonly Used Letter Addresses That Are Modal

"G" Codes:
(preparatory functions) Most are arranged in "Modal" groups.

"F" Codes:
(feedrate) May be expressed as inches or mm per minute.

"S" Codes:
(spindle speed) Expressed as RPM.

"T" Codes:
(tool numbers) Not necessarily pocket numbers!

"D" Codes:
Used to offset registers with G41 & G42.

"H" Codes:
Used to access offset registers with G43.

LSR-F3-LE
Apply CNC Programming Language
Attachment 4: **MASTER** Laboratory Exercise

Successful completion of this technical module will be based on the students' successful completion of the following components:

1. Demonstrate an understanding of word-address and variable block formats;
2. Demonstrate an understanding of standard programming formats such as FANUC; and,
3. Discuss the concept of modal addresses.

Rules of Conduct

1. Absolutely no horseplay or practical joking will be tolerated.
2. Do not talk to anyone who is operating a machine.
3. Walk only in the designated traffic lanes.
4. Dress appropriately; at the absolute minimum, you must have:
   a. No loose clothing, including ties;
   b. Long hair properly stowed;
   c. No jewelry;
   d. Hard, closed-toe shoes;
   e. Eye protection (safety glasses); and,
   f. Ear protection (plugs or headset).
5. Follow all institutional safety rules.

LASER MACHINING SERIES

MASTER Technical Module No. LSR-F4

Subject: Laser Machining **Time: 6.5 Hrs.**

Duty: Perform CNC Machining
Task: Perform Start Up, Tool Changing, and Ending of Programs

Objective(s):

Upon completion of this unit the student will be able to:

a. Start the machine;
b. Zero the machine to the part;
c. Discuss and program tool changing; and,
d. Discuss and program the ending of a CNC program for both mill and laser.

Note: A Matsuura MC-500V2 CNC milling machine with Yasnac MX1 controller will be used as a typical CNC machine.

Convergent Energy Diamond(Series Laser) is being used as a typical CNC laser machine system.

Instructional Materials:

Operation manual for Matsuura
Operation manual for Convergent Energy Diamond(Series Laser) or equivalent
MASTER Handout (LSR-F4-HO1)
MASTER Handout (LSR-F4-HO2) (Typical "M" Codes for Ending Laser CNC Programs)
MASTER Laboratory Exercise (LSR-F4-LE)
MASTER Laboratory Aid (LSR-F4-LA)

References:

Learning Computer Numerical Control, Janke, Michael, Delmar Publishing, Latest Edition
CNC Technology and Programming, Krar, Steve, McGraw-Hill Publishing, Latest Edition
Computer Numerical Control, Kief, Hans B., Glencoe Publishing, Latest Edition

Fundamentals of Numerical Control, Luggen, William W., Delmar Publishing, Latest Edition
CNC: A First Look Primer, Luggen, William W., Delmar Publishing, Latest Edition
Computer Numerical Control Programming, Sava, Michael, Prentice Hall Publishing, Latest Edition
Computer Numerical Control: Concepts and Programming, Seames, Warren S., Delmar Publishing, Latest Edition

Student Preparation:

Students should have previously completed the following Technical Modules:
LSR-F3 "Apply CNC Programming Language"

Introduction:

CNC programming involves an understanding of machining, computers, materials, and part processing. Computer controlled machinery is rapidly replacing manually operated machinery to ensure consistent part quality, efficient part processing, reduced personnel requirements, and lends itself to total factory automation. With this increase in CNC usage, industry is requiring an increase in personnel who are knowledgeable about and able to program the machine tool to produce parts to blue print requirements. In this module, the student will demonstrate an understanding of how to begin and end a CNC program for a typical mill and laser CNC machine. Coverage includes the programming parameters involved in tool changing (mill only).

Presentation Outline:

I. Perform Start Up, Tool Changing, and Ending of Programs
   A. Start the machine
   B. Zero the machine to the part
   C. Discuss and program tool changes
   D. Discuss and program the ending of a CNC program for both mill and laser

Practical Application:

Students will observe and participate in the laboratory demonstrations and discussion of the topics listed above.

Evaluation and/or Verification:

Successful completion of this technical module will be based on the students' successful completion of the following components:

a. Demonstrate how to start the machine;
b. Demonstrate how to zero the machine to the part;
c. Discuss and program tool changing; and,
d. Discuss and program the ending of a CNC program for both mill and laser.

Summary:

Review the main lesson points using the suggested text listed in the reference section of this module. Hold class discussion and answer student questions.

Next Lesson Assignment:

MASTER Technical Module (LSR-F5) pertaining to performing positioning and basic drilling.

LSR-F4-HO1
Perform Start Up, Tool Changing, and Ending of Programs
Attachment 1: **MASTER** Handout No. 1

Objective(s):

Upon completion of this unit the student will be able to:

a. Start the machine;
b. Zero the machine to the part;
c. Discuss and program tool changing; and,
d. Discuss and program the ending of a CNC program for both mill and laser.

Note: A Matsuura MC-500V2 CNC milling machine with Yasnac MX1 controller will be used as a typical CNC machine.

Convergent Energy Diamond(Series Laser) is being used as a typical CNC laser machine system.

Module Outline:

I. Perform Start Up, Tool Changing, and Ending of Programs
   A. Start the machine
   B. Zero the machine to the part
   C. Discuss and program tool changes
   D. Discuss and program the ending of a CNC program for both mill and laser

Typical "M" Codes for Ending Laser CNC Programs

M00 Program Stop: Machine operation will stop until the Start button is pressed.

M30 Program End: Cursor reset to top of program.

M61 Shutter Close: Z-axis retract, Gas Off

LSR-F4-LE
Perform Start Up, Tool Changing, and Ending of Programs
Attachment 3: **MASTER** Laboratory Exercise

Successful completion of this technical module will be based on the students' successful completion of the following components:

a. Demonstrate how to start the machine;
b. Demonstrate how to zero the machine to the part;
c. Discuss and program tool changing; and,
d. Discuss and program the ending of a CNC program for both mill and laser.

Rules of Conduct

1. Absolutely no horseplay or practical joking will be tolerated.
2. Do not talk to anyone who is operating a machine.
3. Walk only in the designated traffic lanes.
4. Dress appropriately; at the absolute minimum, you must have:
   a. No loose clothing, including ties;
   b. Long hair properly stowed;
   c. No jewelry;
   d. Hard, closed-toe shoes;
   e. Eye protection (safety glasses); and,
   f. Ear protection (plugs or headset).
5. Follow all institutional safety rules.

LASER MACHINING SERIES

MASTER Technical Module No. LSR-F5

Subject: Laser Machining **Time: 7.5 Hrs.**

Duty: Perform CNC Machining
Task: Perform Positioning and Basic Drilling

Objective(s):

Upon completion of this unit the student will be able to:

a. Start and stop the spindle;
b. Initiate the drilling cycle;
c. Program using the R-level to avoid obstructions; and,
d. Cancel the drilling cycle.

Note: A Matsuura MC-500V2 CNC milling machine with Yasnac MX1 controller will be used as a typical CNC machine.

Instructional Materials:

Matsuura MC-500V2 CNC milling machine
Yasnac MX1 Controller
Sample drilling programs
MASTER Handout (LSR-F5-HO)
MASTER Laboratory Exercise (LSR-F5-LE)
MASTER Laboratory Aid (LSR-F5-LA)

References:

Learning Computer Numerical Control, Janke, Michael, Delmar Publishing, Latest Edition
CNC Technology and Programming, Krar, Steve, McGraw-Hill Publishing, Latest Edition
Computer Numerical Control, Kief, Hans B., Glencoe Publishing, Latest Edition
Fundamentals of Numerical Control, Luggen, William W., Delmar Publishing, Latest Edition
CNC: A First Look Primer, Luggen, William W., Delmar Publishing, Latest Edition
Computer Numerical Control Programming, Sava, Michael, Prentice Hall Publishing, Latest Edition

Computer Numerical Control: Concepts and Programming, Seames, Warren S., Delmar Publishing, Latest Edition

Student Preparation:

Students should have previously completed the following Technical Modules:
LSR-F4 "Perform Start Up, Tool Changing, and Ending of Programs"

Introduction:

CNC programming involves an understanding of machining, computers, materials, and part processing. Computer controlled machinery is rapidly replacing manually operated machinery to ensure consistent part quality, efficient part processing, reduced personnel requirements, and lends itself to total factory automation. With this increase in CNC usage, industry is requiring an increase in personnel who are knowledgeable about and able to program the machine tool to produce parts to blue print requirements. In this module, the student will demonstrate how to start and stop the spindle and use the CNC machine to perform drilling cycles.

Presentation Outline:

I. Perform Positioning and Basic Drilling
   A. Start and stop the spindle (M03 and M05)
   B. Initiate the drilling cycle (G81)
   C. Program using the "R" level to avoid obstructions (G98 and G99)
   D. Cancel the drilling cycle (G80)

Note: For I.B. through I.D., review and discuss explanations and sample programs of drilling cycles.

Practical Application:

Students will observe and participate in the laboratory demonstrations and discussion of the topics listed above. Following the demonstrations, students will create CNC programs and drill parts as assigned by the instructor.

Evaluation and/or Verification:

Successful completion of this technical module will be based on the students' successful completion of the following components:
a. Demonstrate how to start and stop the spindle;
b. Demonstrate how to initiate the drilling cycle;
c. Program using the R-level to avoid obstructions; and,

d. Cancel the drilling cycle.

Summary:

Review the main lesson points using the suggested text listed in the reference section of this module. Hold class discussion and answer student questions.

Next Lesson Assignment:

MASTER Technical Module (LSR-F6) pertaining to creating a sub-program.

LSR-F5-HO
Perform Positioning and Basic Drilling
Attachment 1: **MASTER** Handout

Objective(s):

Upon completion of this unit the student will be able to:

a. Start and stop the spindle;
b. Initiate the drilling cycle;
c. Program using the R-level to avoid obstructions; and,
d. Cancel the drilling cycle.

Note: A Matsuura MC-500V2 CNC milling machine with Yasnac MX1 controller will be used as a typical CNC machine.

Module Outline:

I. Perform Positioning and Basic Drilling
   A. Start and stop the spindle (M03 and M05)
   B. Initiate the drilling cycle (G81)
   C. Program using the "R" level to avoid obstructions (G98 and G99)
   D. Cancel the drilling cycle (G80)

Note: For I.B. through I.D., review and discuss explanations and sample programs of drilling cycles.

Successful completion of this technical module will be based on the students' successful completion of the following components:

a. Demonstrate how to start and stop the spindle;
b. Demonstrate how to initiate the drilling cycle;
c. Program using the R-level to avoid obstructions; and,
d. Cancel the drilling cycle.

Rules of Conduct

1. Absolutely no horseplay or practical joking will be tolerated.
2. Do not talk to anyone who is operating a machine.
3. Walk only in the designated traffic lanes.
4. Dress appropriately; at the absolute minimum, you must have:
   a. No loose clothing, including ties;
   b. Long hair properly stowed;
   c. No jewelry;
   d. Hard, closed-toe shoes;
   e. Eye protection (safety glasses); and,
   f. Ear protection (plugs or headset).
5. Follow all institutional safety rules.

LASER MACHINING SERIES

MASTER Technical Module No. LSR-F6

Subject: Laser Machining **Time:** 7.5 Hrs.

Duty: Perform CNC Machining
Task: Create a Sub-Program

Objective(s):

Upon completion of this unit the student will be able to:

a. Study the applications of sub-programming;
b. Study the CNC codes used in sub-programming (M98, P###, L##);
c. Call a sub-program (M98); and,
d. End a sub-program (M99).

Note: A Matsuura MC-500V2 CNC milling machine with Yasnac MX1 controller will be used as a typical CNC machine.

Instructional Materials:

Matsuura MC-500V2 CNC milling machine
Yasnac MX1 Controller
Sample sub-routine programs for drilling and milling
MASTER Handout (LSR-F6-HO1)
MASTER Handout (LSR-F6-HO2) (Sub-Programming: General Information to Parts Production)
MASTER Laboratory Exercise (LSR-F6-LE)
MASTER Laboratory Aid (LSR-F6-LA)

References:

Learning Computer Numerical Control, Janke, Michael, Delmar Publishing, Latest Edition
CNC Technology and Programming, Krar, Steve, McGraw-Hill Publishing, Latest Edition
Computer Numerical Control, Kief, Hans B., Glencoe Publishing, Latest Edition
Fundamentals of Numerical Control, Luggen, William W., Delmar Publishing, Latest Edition
CNC: A First Look Primer, Luggen, William W., Delmar Publishing, Latest Edition

Computer Numerical Control Programming, Sava, Michael, Prentice Hall Publishing, Latest Edition

Computer Numerical Control: Concepts and Programming, Seames, Warren S., Delmar Publishing, Latest Edition

Student Preparation:

Students should have previously completed the following Technical Modules:

LSR-F5 "Perform Positioning and Basic Drilling"

Introduction:

CNC programming involves an understanding of machining, computers, materials, and part processing. Computer controlled machinery is rapidly replacing manually operated machinery to ensure consistent part quality, efficient part processing, reduced personnel requirements, and lends itself to total factory automation. With this increase in CNC usage, industry is requiring an increase in personnel who are knowledgeable about and able to program the machine tool to produce parts to blue print requirements. In this module, the student will learn how to use sub-programs to reduce and simplify a CNC program. Coverage includes discussion and demonstration of a sub-program to perform machining operations on multiple common features contained on a workpiece.

Presentation Outline:

I. Create a Sub-Program
   - A. Study the applications of sub-programming
   - B. Study the CNC codes used in sub-programming (M98, P###, L##)
   - C. Call a sub-program (M98)
   - D. End a sub-program (M99)

Note: Review and discuss explanations and sample programming on sub-programming.

Practical Application:

Students will observe and participate in the laboratory demonstration and discussion of the topics listed above. Following the demonstrations, students will create CNC programs including sub-programs as assigned by the instructor.

Evaluation and/or Verification:

Successful completion of this technical module will be based on the students' successful completion of the following components:

1. Demonstrate an understanding of the applications of sub-programming;
2. Discuss and program the CNC codes used in sub-programming (M98, P###, L##);
3. Call a sub-program (M98); and,
4. End a sub-program (M99).

Summary:

Review the main lesson points using the suggested text listed in the reference section of this module. Hold class discussion and answer student questions.

Next Lesson Assignment:

MASTER Technical Module (LSR-F7) pertaining to performing contouring.

LSR-F6-HO1
Create a Sub-Program
Attachment 1: **MASTER** Handout No. 1

Objective(s):

Upon completion of this unit the student will be able to:

a. Study the applications of sub-programming;
b. Study the CNC codes used in sub-programming (M98, P###, L##);
c. Call a sub-program (M98); and,
d. End a sub-program (M99).

Note: A Matsuura MC-500V2 CNC milling machine with Yasnac MX1 controller will be used as a typical CNC machine.

Module Outline:

I. Create a Sub-Program
   A. Study the applications of sub-programming
   B. Study the CNC codes used in sub-programming (M98, P###, L##)
   C. Call a sub-program (M98)
   D. End a sub-program (M99)

Note: Review and discuss explanations and sample programming on sub-programming.

Sub-Programming: General Information to Parts Production

Subroutine programming may be used whenever there will be blocks common to more than one tool or more than one feature on the workpiece.

Like all other programs, subroutines start with a program number; and a "comment statement" if wanted.

Subroutines always end with an M99.

Subroutines are accessed (or called) by "M98 P_____."

Subroutines are stored in the memory along with any other programs. There is no special area in the memory storage.

LSR-F6-LE
Create a Sub-Program
Attachment 3: **MASTER** Laboratory Exercise

Successful completion of this technical module will be based on the students' successful completion of the following components:

1. Demonstrate an understanding of the applications of sub-programming;
2. Discuss and program the CNC codes used in sub-programming (M98, P###, L##);
3. Call a sub-program (M98); and,
4. End a sub-program (M99).

Rules of Conduct

1. Absolutely no horseplay or practical joking will be tolerated.
2. Do not talk to anyone who is operating a machine.
3. Walk only in the designated traffic lanes.
4. Dress appropriately; at the absolute minimum, you must have:
   a. No loose clothing, including ties;
   b. Long hair properly stowed;
   c. No jewelry;
   d. Hard, closed-toe shoes;
   e. Eye protection (safety glasses); and,
   f. Ear protection (plugs or headset).
5. Follow all institutional safety rules.

LASER MACHINING SERIES

MASTER Technical Module No. LSR-F7

Subject: Laser Machining **Time:** 7.5 Hrs.

Duty: Perform CNC Machining
Task: Perform Contouring

Objective(s):

Upon completion of this unit the student will be able to:

a. Initiate rapid traverse (G00);
b. Perform linear cutting (G01);
c. Perform the necessary trigonometry to obtain program coordinates;
d. Perform circular cutting (G02 and G03 with I, J, K, parameters); and,
e. Discuss how to select each of the three orthogonal planes (G17, G18, G19).

Note: A Matsuura MC-500V2 CNC milling machine with Yasnac MX1 controller will be used as a typical CNC machine.

Instructional Materials:

Matsuura MC-500V2 CNC milling machine
Yasnac MX1 Controller
MASTER Handout (LSR-F7-HO)
MASTER Laboratory Exercise (LSR-F7-LE1)
MASTER Laboratory Exercise (LSR-F7-LE2)
MASTER Laboratory Aid (LSR-F7-LA)

References:

Learning Computer Numerical Control, Janke, Michael, Delmar Publishing, Latest Edition
CNC Technology and Programming, Krar, Steve, McGraw-Hill Publishing, Latest Edition
Computer Numerical Control, Kief, Hans B., Glencoe Publishing, Latest Edition
Fundamentals of Numerical Control, Luggen, William W., Delmar Publishing, Latest Edition
CNC: A First Look Primer, Luggen, William W., Delmar Publishing, Latest Edition

Computer Numerical Control Programming, Sava, Michael, Prentice Hall Publishing, Latest Edition

Computer Numerical Control: Concepts and Programming, Seames, Warren S., Delmar Publishing, Latest Edition

Student Preparation:

Students should have previously completed the following Technical Modules:

LSR-F6 "Create a Sub-Program"

Introduction:

CNC programming involves an understanding of machining, computers, materials, and part processing. Computer controlled machinery is rapidly replacing manually operated machinery to ensure consistent part quality, efficient part processing, reduced personnel requirements, and lends itself to total factory automation. With this increase in CNC usage, industry is requiring an increase in personnel who are knowledgeable about and able to program the machine tool to produce parts to blue print requirements. In this module, the student will demonstrate how to perform contour milling utilizing the required G and M codes for a typical CNC machine. Coverage includes linear cuts (G01) and circular interpolation (G02 & G03). The student will learn how to position the cutting tool from one feature to another using the rapid traverse (G00) command. The required trigonometry is presented in order to provide the necessary calculations required for cutter positioning.

Presentation Outline:

I. Perform Contouring
   - A. Initiate rapid traverse (G00)
   - B. Perform linear cutting (G01)
   - C. Perform the necessary trigonometry to obtain program coordinates
   - D. Perform circular cutting (G02 and G03 with I, J, K, parameters)
   - E. Discuss how to select each of the three orthogonal planes (G17, G18, G19)

Practical Application:

Students will observe and participate in the discussion of the topics listed above. Following the demonstrations, students will:

1. Perform math; and,
2. Create three CNC programs*.

* The instructor may use his/her discretion as to how many programs are practical.

Evaluation and/or Verification:

Successful completion of this technical module will be based on the students' successful completion of the following components:

1. Demonstrate how to initiate rapid traverse (G00);
2. Perform linear cutting (G01);
3. Perform the necessary trigonometry to obtain program coordinates;.
4. Perform circular cutting (G02 and G03 with I, J, K, parameters); and,
5. Demonstrate an understanding of how to select each of the orthogonal planes.

Summary:

Review the main lesson points using the suggested text listed in the reference section of this module. Hold class discussion and answer student questions.

Next Lesson Assignment:

MASTER Technical Module (LSR-F8) pertaining to applying tool radius compensation (cutter comp).

LSR-F7-HO
Perform Contouring
Attachment 1: **MASTER** Handout

Objective(s):

Upon completion of this unit the student will be able to:

a. Initiate rapid traverse (G00);
b. Perform linear cutting (G01);
c. Perform the necessary trigonometry to obtain program coordinates;
d. Perform circular cutting (G02 and G03 with I, J, K, parameters); and,
e. Discuss how to select each of the three orthogonal planes (G17, G18, G19).

Note: A Matsuura MC-500V2 CNC milling machine with Yasnac MX1 controller will be used as a typical CNC machine.

Module Outline:

I. Perform Contouring
   A. Initiate rapid traverse (G00)
   B. Perform linear cutting (G01)
   C. Perform the necessary trigonometry to obtain program coordinates
   D. Perform circular cutting (G02 and G03 with I, J, K, parameters)
   E. Discuss how to select each of the three orthogonal planes (G17, G18, G19)

LSR-F7-LE1
Perform Contouring
Attachment 2: **MASTER** Laboratory Exercise No. 1

Successful completion of this technical module will be based on the students' successful completion of the following components:

1. Demonstrate how to initiate rapid traverse (G00);
2. Perform linear cutting (G01);
3. Perform the necessary trigonometry to obtain program coordinates;.
4. Perform circular cutting (G02 and G03 with I, J, K, parameters); and,
5. Demonstrate an understanding of how to select each of the orthogonal planes.

LSR-F7-LE2
Perform Contouring
Attachment 3: **MASTER** Laboratory Exercise No. 2

Students will:

1. Perform math; and,
2. Create three CNC programs*.

* The instructor may use his/her discretion as to how many programs are practical.

Rules of Conduct

1. Absolutely no horseplay or practical joking will be tolerated.
2. Do not talk to anyone who is operating a machine.
3. Walk only in the designated traffic lanes.
4. Dress appropriately; at the absolute minimum, you must have:
   a. No loose clothing, including ties;
   b. Long hair properly stowed;
   c. No jewelry;
   d. Hard, closed-toe shoes;
   e. Eye protection (safety glasses); and,
   f. Ear protection (plugs or headset).
5. Follow all institutional safety rules.

LASER MACHINING SERIES

MASTER Technical Module No. LSR-F8

Subject: Laser Machining **Time: 6.5 Hrs.**

Duty: Perform CNC Machining
Task: Apply Tool Radius Compensation

Objective(s):

Upon completion of this unit the student will be able to:

a. Understand the purpose and application of tool radius compensation;
b. Turn on cutter comp left (G41);
c. Turn on cutter comp right (G42); and,
d. Turn off (cancel) cutter comp (G40).

Note: A Matsuura MC-500V2 CNC milling machine with Yasnac MX1 controller will be used as a typical CNC machine.

Instructional Materials:

Matsuura MC-500V2 CNC milling machine
Yasnac MX1 Controller
Sample cutter comp program
MASTER Handout (LSR-F8-HO1)
MASTER Handout (LSR-F8-HO2) (Tool Radius Compensation: Purpose and Application)
MASTER Laboratory Exercise (LSR-F8-LE)
MASTER Laboratory Aid (LSR-F8-LA)

References:

Learning Computer Numerical Control, Janke, Michael, Delmar Publishing, Latest Edition
CNC Technology and Programming, Krar, Steve, McGraw-Hill Publishing, Latest Edition
Computer Numerical Control, Kief, Hans B., Glencoe Publishing, Latest Edition
Fundamentals of Numerical Control, Luggen, William W., Delmar Publishing, Latest Edition
CNC: A First Look Primer, Luggen, William W., Delmar Publishing, Latest Edition

Computer Numerical Control Programming, Sava, Michael, Prentice Hall Publishing, Latest Edition

Computer Numerical Control: Concepts and Programming, Seames, Warren S., Delmar Publishing, Latest Edition

Student Preparation:

Students should have previously completed the following Technical Modules:

LSR-F7 "Perform Contouring"

Introduction:

CNC programming involves an understanding of machining, computers, materials, and part processing. Computer controlled machinery is rapidly replacing manually operated machinery to ensure consistent part quality, efficient part processing, reduced personnel requirements, and lends itself to total factory automation. With this increase in CNC usage, industry is requiring an increase in personnel who are knowledgeable about and able to program the machine tool to produce parts to blue print requirements. In this module, the student will discuss and demonstrate how to perform contour milling utilizing the G-codes associated with cutter compensation.

Presentation Outline:

I. Discuss and Apply Tool Radius Compensation
   - A. Study the purpose and application of tool radius compensation
   - B. Turn on cutter comp left (G41)
   - C. Turn on cutter comp right (G42)
   - D. Turn off (cancel) cutter comp (G40)

Practical Application:

Students will observe and participate in the laboratory demonstration and discussion of the topics listed above. Following the demonstrations, students will create CNC programs, including cutter comp.

Evaluation and/or Verification:

Successful completion of this technical module will be based on the students' successful completion of the following components:

1. Discuss the purpose and application of tool radius compensation;
2. Turn on cutter comp left (G41);
3. Turn on cutter comp right (G42); and,
4. Turn off (cancel) cutter comp (G40).

Summary:

Review the main lesson points using the suggested text listed in the reference section of this module. Hold class discussion and answer student questions.

Next Lesson Assignment:

MASTER Technical Module (LSR-F9) pertaining to performing program preparation.

LSR-F8-HO1
Apply Tool Radius Compensation
Attachment 1: **MASTER** Handout No. 1

Objective(s):

Upon completion of this unit the student will be able to:

a. Understand the purpose and application of tool radius compensation;
b. Turn on cutter comp left (G41);
c. Turn on cutter comp right (G42); and,
d. Turn off (cancel) cutter comp (G40).

Note: A Matsuura MC-500V2 CNC milling machine with Yasnac MX1 controller will be used as a typical CNC machine.

Module Outline:

I. Discuss and Apply Tool Radius Compensation
   A. Study the purpose and application of tool radius compensation
   B. Turn on cutter comp left (G41)
   C. Turn on cutter comp right (G42)
   D. Turn off (cancel) cutter comp (G40)

Tool Radius Compensation: Purpose and Application

Tool Radius Compensation Allows:

The ability to program the actual part coordinates (tool diameter is ignored) while storing the tool radius in an offset register. Effectively a zero tool radius is being used.

Single adjustments of the stored tool radius value to compensate for tool wear or deflection. As tooling wears or tooling is changed, one register is modified, not entire program.

The ability to use nonstandard tool diameters.

The use of the codes – G40, G41, & G42:

At set up:

1. Store the tool radius in an offset register that will not be used for any other purpose. This should be a positive (+) value.

In the program:

1. The selection of G41 or G42 (right or left cutter comp) is based on the direction of intended tool motion. Will the cutter be to the right or left of the workpiece?

2. Program G41 or G42 in a block that also contains axis motion and a "D___" word.

3. G40, G41, or G42 may be invoked only while in G00 or G01.

4. Block containing G41 or G42 and "D___" should contain an axis motion that is slightly longer than the anticipated tool radius. This axis motion may be at 90(to the first surface to be machined. This simply allows the operator to observe an approach move.

5. Program G40 in a block containing an axis motion that is slightly longer than the anticipated tool radius. This axis motion may be at 90° to the last surface to be machined.

6. G41/G42 cause the control to "read ahead" at least two blocks beyond the block being executed. Therefore, avoid programming two or more consecutive blocks that do not contain axis motion in the plane specified by G17, G18, or G19.

LSR-F8-LE
Apply Tool Radius Compensation
Attachment 3: **MASTER** Laboratory Exercise

Successful completion of this technical module will be based on the students' successful completion of the following components:

1. Discuss the purpose and application of tool radius compensation;
2. Turn on cutter comp left (G41);
3. Turn on cutter comp right (G42); and,
4. Turn off (cancel) cutter comp (G40).

Rules of Conduct

1. Absolutely no horseplay or practical joking will be tolerated.
2. Do not talk to anyone who is operating a machine.
3. Walk only in the designated traffic lanes.
4. Dress appropriately; at the absolute minimum, you must have:
   a. No loose clothing, including ties;
   b. Long hair properly stowed;
   c. No jewelry;
   d. Hard, closed-toe shoes;
   e. Eye protection (safety glasses); and,
   f. Ear protection (plugs or headset).
5. Follow all institutional safety rules.

LASER MACHINING SERIES

MASTER Technical Module No. LSR-F9

Subject: Laser Machining **Time:** 6.5 Hrs.

Duty: Perform CNC Machining
Task: Perform Program Preparation

Objective(s):

Upon completion of this unit the student will be able to:

a. Identify program planning steps;
b. Set beam size and power (laser applications);
c. Determine cutting depth (mill) or penetration (laser);
d. Determine cutting speed (mill only) and feed; and,
e. Determine and design fixtures for part holding.

Note: A Matsuura MC-500V2 CNC milling machine with Yasnac MX1 controller will be used as a typical CNC machine.

Convergent Energy Diamond (Series Laser) is being used as a typical CNC laser machine system.

Instructional Materials:

Operation manual for Matsuura.
Operation manual for Convergent Energy Diamond (Series Laser) or equivalent
MASTER Handout (LSR-F9-HO)
MASTER Laboratory Exercise (LSR-F9-LE)
MASTER Laboratory Aid (LSR-F9-LA)

References:

Learning Computer Numerical Control, Janke, Michael, Delmar Publishing, Latest Edition
CNC Technology and Programming, Krar, Steve, McGraw-Hill Publishing, Latest Edition
Computer Numerical Control, Kief, Hans B., Glencoe Publishing, Latest Edition
Fundamentals of Numerical Control, Luggen, William W., Delmar Publishing, Latest Edition

CNC: A First Look Primer, Luggen, William W., Delmar Publishing, Latest Edition

Computer Numerical Control Programming, Sava, Michael, Prentice Hall Publishing, Latest Edition

Computer Numerical Control: Concepts and Programming, Seames, Warren S., Delmar Publishing, Latest Edition

Machinery's Handbook, Industrial Press, Latest Edition

Student Preparation:

Students should have previously completed the following Technical Modules:

LSR-F8 "Apply Tool Radius Compensation"

Introduction:

CNC programming involves an understanding of machining, computers, materials, and part processing. Computer controlled machinery is rapidly replacing manually operated machinery to ensure consistent part quality, efficient part processing, reduced personnel requirements, and lends itself to total factory automation. With this increase in CNC usage, industry is requiring an increase in personnel who are knowledgeable about and able to program the machine tool to produce parts to blue print requirements. In this module, the student will demonstrate an understanding of how to plan out a CNC program. Coverage includes determining speeds and feeds and cutting depth for mill applications. In addition, the student will learn how set beam size and power for a laser CNC machine. Finally, a discussion of part fixturing will be included.

Presentation Outline:

I. Perform Program Preparation
   - A. Identify program planning steps
   - B. Set beam size and power (laser applications)
   - C. Determine cutting depth (mill) or penetration (laser)
   - D. Determine cutting speed (mill only) and feed
   - E. Determine and design fixtures for part holding

Practical Application:

Students will observe and participate in the demonstrations and discussion of the topics listed above. Following the discussions, students will plan a CNC program including fixturing for parts which are assigned by the instructor.

Evaluation and/or Verification:

Successful completion of this technical module will be based on the students' successful completion of the following components:

a. Demonstrate how to identify program planning steps;
b. Demonstrate how to set beam size and power (laser applications);
c. Determine cutting depth (mill) or penetration (laser);
d. Determine cutting speed (mill only) and feed; and,
e. Determine and design fixtures for part holding.

Summary:

Review the main lesson points using the suggested text listed in the reference section of this module. Hold class discussion and answer student questions.

Next Lesson Assignment:

MASTER Technical Module (LSR-F10) pertaining to applying special laser coding parameters.

LSR-F9-HO
Perform Program Preparation
Attachment 1: **MASTER** Handout

Objective(s):

Upon completion of this unit the student will be able to:

a. Identify program planning steps;
b. Set beam size and power (laser applications);
c. Determine cutting depth (mill) or penetration (laser);
d. Determine cutting speed (mill only) and feed; and,
e. Determine and design fixtures for part holding.

Note: A Matsuura MC-500V2 CNC milling machine with Yasnac MX1 controller will be used as a typical CNC machine.

Convergent Energy Diamond (Series Laser) is being used as a typical CNC laser machine system.

Module Outline:

I. Perform Program Preparation
   A. Identify program planning steps
   B. Set beam size and power (laser applications)
   C. Determine cutting depth (mill) or penetration (laser)
   D. Determine cutting speed (mill only) and feed
   E. Determine and design fixtures for part holding

Successful completion of this technical module will be based on the students' successful completion of the following components:

a. Demonstrate how to identify program planning steps;
b. Demonstrate how to set beam size and power (laser applications);
c. Determine cutting depth (mill) or penetration (laser);
d. Determine cutting speed (mill only) and feed; and,
e. Determine and design fixtures for part holding.

Rules of Conduct

1. Absolutely no horseplay or practical joking will be tolerated.
2. Do not talk to anyone who is operating a machine.
3. Walk only in the designated traffic lanes.
4. Dress appropriately; at the absolute minimum, you must have:
   a. No loose clothing, including ties;
   b. Long hair properly stowed;
   c. No jewelry;
   d. Hard, closed-toe shoes;
   e. Eye protection (safety glasses); and,
   f. Ear protection (plugs or headset).
5. Follow all institutional safety rules.

LASER MACHINING SERIES

MASTER Technical Module No. LSR-F10

Subject: Laser Machining **Time:** 7.5 Hrs.

Duty: Perform CNC Machining
Task: Apply Special Laser Coding Parameters

Objective(s):

Upon completion of this unit the student will be able to:

a. Select assist gas: oxygen low;
b. Select assist gas: oxygen high;
c. Select assist gas: nitrogen;
d. Select assist gas: air;
e. Turn on and cancel selected assist gas; and,
f. Set continuous wave, gated pulsing, super pulsing, and hyper pulsing.

Note: Convergent Energy Diamond (Series Laser) is being used as a typical CNC laser machine system.

Instructional Materials:

Convergent Energy Diamond (Series Laser) or equivalent.
Operation manual for Convergent Energy Diamond (Series Laser)
(For sample program) Stock: 7.5 x 5 x .062 steel
MASTER Handout (LSR-F10-HO1)
MASTER Handout (LSR-F10-HO2) (Typical "M" Codes for Laser CNC Machines)
MASTER Handout (LSR-F10-HO3) (Sample Program for Laser CNC Machine)
MASTER Laboratory Exercise (LSR-F10-LE)
MASTER Laboratory Aid (LSR-F10-LA)

References:

Learning Computer Numerical Control, Janke, Michael, Delmar Publishing, Latest Edition
CNC Technology and Programming, Krar, Steve, McGraw-Hill Publishing, Latest Edition
Computer Numerical Control, Kief, Hans B., Glencoe Publishing, Latest Edition

Fundamentals of Numerical Control, Luggen, William W., Delmar Publishing, Latest Edition

CNC: A First Look Primer, Luggen, William W., Delmar Publishing, Latest Edition

Computer Numerical Control Programming, Sava, Michael, Prentice Hall Publishing, Latest Edition

Computer Numerical Control: Concepts and Programming, Seames, Warren S., Delmar Publishing, Latest Edition

Student Preparation:

Students should have previously completed the following Technical Modules:

LSR-F9 "Perform Program Preparation"

Introduction:

CNC programming involves an understanding of machining, computers, materials, and part processing. Computer controlled machinery is rapidly replacing manually operated machinery to ensure consistent part quality, efficient part processing, reduced personnel requirements, and lends itself to total factory automation. With this increase in CNC usage, industry is requiring an increase in personnel who are knowledgeable about and able to program the machine tool to produce parts to blue print requirements. In this module, the student will discuss and demonstrate how to utilize special laser coding parameters. Specifically, how to turn on and off various assist gases for the laser in addition to controlling the laser pulsing. Coverage includes creating a CNC program for laser cutting.

Presentation Outline:

I. Discuss and apply special laser coding parameters
   - A. Select assist gas-oxygen low
   - B. Select assist gas-oxygen high
   - C. Select assist gas-nitrogen
   - D. Select assist gas-air
   - E. Turn on and cancel selected assist gas
   - F. Set continuous wave, gated pulsing, super pulsing, and hyper pulsing

Practical Application:

Students will observe and participate in the discussion of the topics listed above. Following the demonstrations, students will create CNC programs for laser cutting as assigned by the instructor.

Evaluation and/or Verification:

Successful completion of this technical module will be based on the students' successful completion of the following components:

a. Demonstrate an understanding of how to program assist gas-oxygen high;
b. Demonstrate an understanding of how to program assist gas-nitrogen;
c. Demonstrate an understanding of how to program assist gas-air;
d. Demonstrate an understanding of how to turn on and cancel selected assist gas: and,
e. Demonstrate an understanding of how to set continuous wave, gated pulsing, super pulsing, and hyper pulsing.

Summary:

Review the main lesson points using the suggested text listed in the reference section of this module. Hold class discussion and answer student questions.

Next Lesson Assignment:

MASTER Technical Module (LSR-G1) pertaining to characteristics of light.

LSR-F10-HO1
Apply Special Laser Coding Parameters
Attachment 1: **MASTER** Handout No. 1

Objective(s):

Upon completion of this unit the student will be able to:

a. Select assist gas: oxygen low;
b. Select assist gas: oxygen high;
c. Select assist gas: nitrogen;
d. Select assist gas: air;
e. Turn on and cancel selected assist gas; and,
f. Set continuous wave, gated pulsing, super pulsing, and hyper pulsing.

Note: Convergent Energy Diamond (Series Laser) is being used as a typical CNC laser machine system.

Module Outline:

I. Discuss and apply special laser coding parameters
   A. Select assist gas-oxygen low
   B. Select assist gas-oxygen high
   C. Select assist gas-nitrogen
   D. Select assist gas-air
   E. Turn on and cancel selected assist gas
   F. Set continuous wave, gated pulsing, super pulsing, and hyper pulsing

Typical "M" Codes for Laser CNC Machines

M00 Program Stop: Machine operation will stop until the Start button is pressed
M02 Program End (Normally not used)
M08 Water assist on (enable)
M09 Water assist off (disable)
M30 Program End: Cursor reset to top of program
M58 High Simmer (Normal setting, for all pulse settings)
M59 Low Simmer (For CW and Gated Pulse settings only)
M60 Shutter Open (Normally not used)
M61 Shutter Close: Z-axis retract, Gas Off
M63 Assist Gas: Oxygen (02) Low
M64 Assist Gas: Oxygen (02) High
M65 Assist Gas: Nitrogen (N2)
M67 Assist Gas: Air
M68 Turns on the gas selected by M63, M64, M65, or M67
M69 Turns on the gas selected by M63
M70 Cancels M68 and M69
M80 Work chute 1 (12 x 12) Open/close
M88 Work chute 2 (31 x 39) Open
M89 Work chute 3 (31 x 39) Close
M90 Continuous Wave
M91 Gated Pulsing
M92 Super Pulsing
M93 Hyper Pulsing
M98 Sub-Program call (M98P.....)
M99 Sub-Program End

LSR-F10-HO3
Apply Special Laser Coding Parameters
Attachment 3: **MASTER** Handout No. 3

Sample Program, Laser CNC Machine

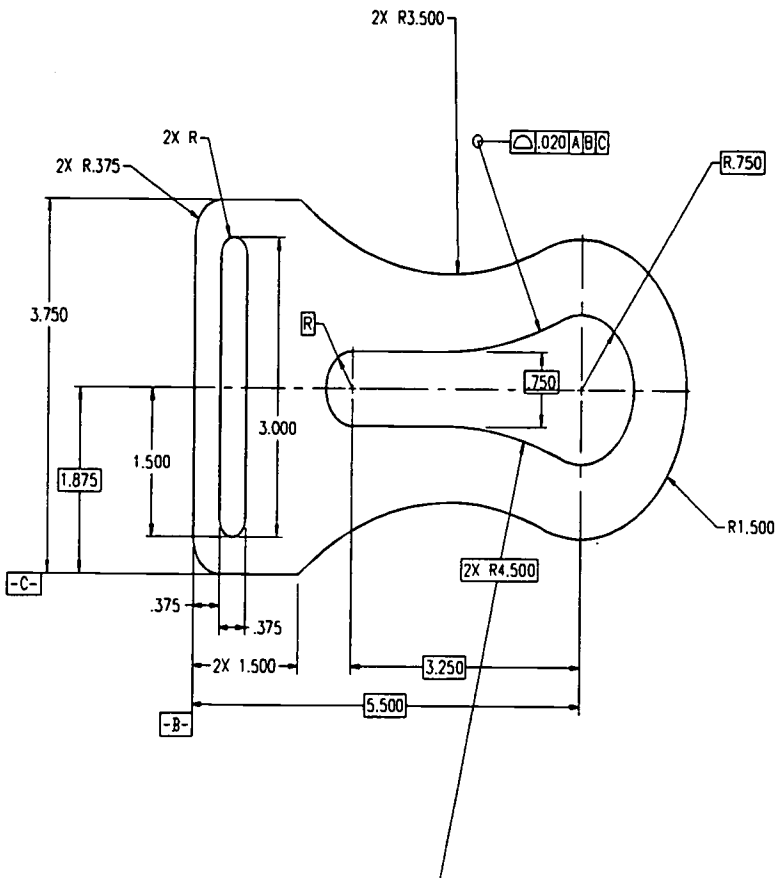

Part thickness is .062, Material is 1018 steel.

For piercing: Use Power = 1500, Frequency = 200, Gated pulsing, Duty = 25, O_2 assist gas, time .2

For cutting: Use Power = 1000, Frequency = 100, Continuous pulsing, Duty = 15, O_2 assist gas, feed rate 150

Use a laser kerf width of .008

Program:

%	
O0000	
G90 G92 X-.25 Y-.625 Z0	(Part zero is offset from stock zero)
S1500 B200 C25 J0.2	(Sets Pierce power, frequency, duty, & time)
M91 M63	(Sets Gated pulse and assist gas: O_2)
G41 M68 G00 X0.25 Y1.0	(Cutter comp on, gas on, move to first pierce)
Z-.062	
S1000 B100 C15 J0.0	(Sets cut power, frequency, duty, & dwell time)
M90 M63	(Sets continuous pulse and assist gas: O_2)
G01 Y4.0 F150	(Cut outside perimeter beginning at vertical line)
G02 X0.625 Y4.375 I0.625 J4.0	
G01 X1.75	
G03 X5.193 Y3.893 I3.893 J7.142	
G02 X7.25 Y2.5 I5.75 J2.5	
X5.193 Y1.107 I5.75 J2.5	
G03 X1.75 Y0.625 I3.893 J-2.142	
G01 X0.625	
G02 X0.25 Y1.0 I0.625 J1.0	
M61	(Close shutter, z-axis retract, gas off)
G40 G00 Z0.0	
S1500 B200 C25 J0.2	(Sets Pierce power, frequency, duty, & time)
M91 M63	(Sets Gated pulse and assist gas: O_2)
G42 M68 G00 X3.85 Y2.875	(Rapid to start of inside profile)
Z-.062	
S1000 B100 C15 J0.0	(Sets cut power, frequency, duty, & dwell time)
M90 M63	(Sets continuous pulse and assist gas: O_2)
G03 X5.465 Y3.194 I3.85 J7.125	(Cut inside profile)
G02 X6.5 Y2.5 I5.75 J2.5	

X5.465 Y1.806 I5.75 J2.5	
G03 X3.85 Y2.125 I3.85 J-2.125	
G01 X2.5	
G02 X2.125 Y2.5 I2.5 J2.5	
X2.5 Y2.875 I2.5 J2.5	
G01 X3.85	
M61	(Close shutter, z-axis retract, gas off)
G40 G00 Z0.0	
S1500 B200 C25 J0.2	(Sets Pierce power, frequency, duty, & time)
M91 M63	(Sets Gated pulse and assist gas: O_2)
G42 M68 G00 X0.625 Y1.188	(Rapid to start of slot)
Z-.062	
S1000 B100 C15 J0.0	(Sets cut power, frequency, duty, & dwell time)
M90 M63	(Sets continuous pulse and assist gas: O_2)
G01 Y3.813	(Cut slot)
G02 X1.0 Y3.813 I0.813 J3.813	
G01 Y1.188	
G02 X0.625 Y1.188 I0.813 J1.188	
M61	
G40 G00 Z0.0	
M70	(Cancel assist gas)
M30	
%	

LSR-F10-LE
Apply Special Laser Coding Parameters
Attachment 4: **MASTER** Laboratory Exercise

Successful completion of this technical module will be based on the students' successful completion of the following components:

a. Demonstrate an understanding of how to program assist gas-oxygen high;
b. Demonstrate an understanding of how to program assist gas-nitrogen;
c. Demonstrate an understanding of how to program assist gas-air;
d. Demonstrate an understanding of how to turn on and cancel selected assist gas: and,
e. Demonstrate an understanding of how to set continuous wave, gated pulsing, super pulsing, and hyper pulsing.

Rules of Conduct

1. Absolutely no horseplay or practical joking will be tolerated.
2. Do not talk to anyone who is operating a machine.
3. Walk only in the designated traffic lanes.
4. Dress appropriately; at the absolute minimum, you must have:
   a. No loose clothing, including ties;
   b. Long hair properly stowed;
   c. No jewelry;
   d. Hard, closed-toe shoes;
   e. Eye protection (safety glasses); and,
   f. Ear protection (plugs or headset).
5. Follow all institutional safety rules.

Laser Machinist .... apply the principles of electronics, lasers, optics, materials, engineering documentation, CAD/CAM, and systems integration to manufacture products following current industry and company standards.

Duties	Tasks												
A Practice Laser Safety	A-1 Discuss laser safety standards	A-2 Discuss basic laser principles	A-3 Discuss laser hazards	A-4 Discuss control measures									
B Apply Mathematical Concepts	B-1 Perform basic mathematical functions	B-2 Perform algebraic functions	B-3 Study exponents and right triangle geometry	B-4 Study elements of plane and solid geometry	B-5 Perform data evaluation and statistical analysis	B-6 Perform proportioning and interpolation	B-7 Perform basic trigonometric calculations	B-8 Investigate vectors and vector systems	B-9 Investigate the Cartesian Coordiante System				
C Perform Measurement and Inspection	C-1 Study basics of metrology	C-2 Select instruments used for measurement	C-3 Study datums and the three plane concept	C-4 Select gauging tools	C-5 Use CMM for location of features	C-6 Perform measurements for orientation tolerances	C-7 Perform measurment by optical comparison	C-8 Perform measurements for circularity, concentricity, runout, and straightness tolerances	C-9 Investigate advanced metrology topics				
D Troubleshoot Industrial Electronics and Control	D-1 Perform DC voltage, current, and power measurements	D-2 Perform AC voltage, current, and power measurements	D-3 Investigate digital logic systems	D-4 Investigate diode applications	D-5 Investigate transistors and thyristors	D-6 Investigate operational amplifiers	D-7 Investigate power supply circuits						
E Apply Concepts of Modern Optics	E-1 Study reflection and refraction at plane surfaces	E-2 Perform imaging with a single lens	E-3 Perform imaging with multiple lenses	E-4 Study F-stops and apertures	E-5 Use laser beam-expanding collimators	E-6 Study interference	E-7 Study diffraction	E-8 Study polarization	E-9 Investigate radiometry and photometry				
F Perform CNC Machining	F-1 Apply machine specific nomenclature and terminology	F-2 Investigate the Cartesian coordinate system as applied to a CNC mill or laser	F-3 Apply CNC programming language	F-4 Perform start up, tool changing, and ending of programs	F-5 Perform positioning and basic drilling	F-6 Create a sub-program	F-7 Perform contouring	F-8 Apply tool radius compensation	F-9 Perform program preparation	F-10 Apply special laser coding parameters			
G Investigate Industrial Laser Systems	G-1 Review characteristics of light	G-2 Investigate emission and absorption of light	G-3 Discuss optical cavities and laser modes	G-4 Discuss temporal characteristics of lasers	G-5 Investigate spatial characteristics of lasers	G-6 Discuss laser classifications and characteristics							
H Perform Computer-Aided Drafting (CAD)	H-1 Discuss and understand PC basics	H-2 Discuss CAD basics and file management	H-3 Use drawing settings	H-4 Perform basic editing commands	H-5 Create drawings with accuracy	H-6 Organize drawing information	H-7 Control the display of drawings	H-8 Use intermediate drawing commands	H-9 Perform intermediate editing commands	H-10 Create multi view drawings	H-11 Create sectioned drawings	H-12 Investigate basic dimensioning	H-13 Perform advanced dimensioning
	H-14 Use and manipulate blocks	H-15 Use blocks to automate the drawing process											
I Perform Laser Materials Processing	I-1 Review laser safety standards	I-2 Discuss lasers used for materials processing	I-3 Discuss laser optics and beam characteristics	I-4 Investigate absorption of laser energy	I-5 Use lasers for welding and surface treatment	I-6 Use lasers for material removal							
J Perform Computer-Aided Manufacturing (CAM)	J-1 Discuss and understand the basics of a PC based CAM system	J-2 Discuss basic CAM operations	J-3 Set up cutting tools	J-4 Create simple part profiles	J-5 Create and edit complex part profiles	J-6 Perform roughing, drilling, and counterboring	J-7 Advanced editing of part profiles	J-8 Edit tool paths	J-9 Use construction layers in SmartCAM	J-10 Perform user commands and machine events	J-11 Create families of parts	J-12 Perform CAD/CAM integration	J-13 Perform code generation

LSB PM4
040698

BEST COPY AVAILABLE

LASER MACHINING SERIES

MASTER Technical Module No. LSR-G1

Subject: Laser Machining **Time:** 10 Hrs.

Duty: Investigate Industrial Laser Systems
Task: Review Characteristics of Light

Objective(s):

Upon completion of this unit the student will be able to:

a. Define and understand the wave nature of light;
b. Define polarization;
c. Define monochromaticity;
d. Define temporal and spatial coherence;
e. Explain constructive and non-destructive interference; and,
f. Define Brewster's Angle.

Instructional Materials:

HeNe laser, 1-3mw
Sodium Lamp
Green light filter
Two optical flats, 4-inch diameter, (/10 flatness)
Microscope slide
Set of double slits (such as Pasco OS-9123)
Laser beam expanding collimator
Two front surface mirrors
Beam splitter
Optical Bench
Three optical bench carriers with optical component mounts
Optical power meter
Linear translator
Set of precision apertures:

Single slits:	0.02, 0.04, 0.08, 0.16 mm slit width
Double slits:	slit width 0.04 mm; slit spacing 0.25 mm
Multiple slits:	2,3,4,5 slits with slit width 0.04 mm and slit spacing 0.125 mm
Circular apertures:	0.04, 0.08, 0.150 mm
Square aperture:	0.25 mm x 0.25 mm
Grating:	5276 lines/cm

Two Linear Polarizers
Two 1/4 wave plates

Two rotational stage assemblies
Photo-electric power meter
MASTER Handout (LSR-G1-HO)
MASTER Laboratory Exercise (LSR-G1-LE)
MASTER Laboratory Aid (LSR-G1-LA)

Note: All components available inexpensively from Edmund Scientific, Inc.

References:

Light Sources and Wave Optics, CORD Communications, Laser Electro-Optics Series, Latest Edition

Introduction to Classical and Modern Optics, Meyer-Arendt, Jurgen R., Prentice Hall Publishing, Latest Edition

Introduction to Lasers, CORD Communications, Laser Electro-Optics Series, Latest Edition

ANSI-Z136.1 (1993), *Safe Use of Lasers,* Laser Institute of America, (Publication No. 106), Latest Edition

An Introduction to Lasers and Their Applications, O'Shea, Callen, Rhodes, Addison-Wesley Publishers, Latest Edition

Industrial Applications of Lasers, Ready, John, F., Academic Press, Latest Edition

Understanding Lasers - An Entry-Level Guide, Hecht, Jeff, IEEE Press, Latest Edition

Video(s): *Video Demonstrations in Lasers and Optics,* MIT Center for Advanced Engineering Study, Latest Edition

Introduction to Laser Safety and Laser Hazards Video Training Module, Laser Institute of America, Publication No.115, Latest Edition

Student Preparation:

Students should have previously completed the following Technical Modules:

LSR-A1 through LSR-A4	"Practice Laser Safety"
LSR-B1 through LSR-B9	"Apply Mathematical Concepts"
LSR-E1 through LSR-E9	"Apply Concepts of Modern Optics"

Introduction:

Light can be represented at several levels of sophistication. The simplest of these is to represent the light by rays. That is the domain of geometrical optics. But, if the wave length of the light can not be neglected in comparison to the dimensions of the system as a whole, we need to take into account the wave nature of light. We need to represent the light by waves. That is the domain of physical optics. In this module, we will

review the basic characteristics of light as applied to lasers. Topics will include polarization, interference, and coherence. The intent is to reinforce the students understanding of light to prepare for the next sequence of technical modules in laser theory.

Presentation Outline:

I. Discuss and Review the Characteristic of Light
   - A. Discuss the following wave properties of light
     1. Frequency
     2. Wavelength
     3. Phase
     4. Amplitude
     5. The electromagnetic spectrum
   - B. Define polarization
     (Review module LSR-E8 "Study Polarization"
   - C. Define monochromaticity
   - D. Define temporal and spatial coherence
   - E. Explain constructive and non-destructive interference
     (Review module LSR-E7 "Study Diffraction"
   - F. Define and demonstrate Brewster's Angle
     (Review module LSR-E8 "Study Polarization"
   - G. Practice and demonstration of skills listed above

Practical Application:

Review and discuss experiments performed in modules LSR-E1 through LSR-E9.

Evaluation and/or Verification:

Successful completion of this technical module will be based on the students' successful completion of the following components:

a. Define and understand the wave nature of light;
b. Define polarization;
c. Define monochromaticity;
d. Define temporal and spatial coherence;
e. Explain constructive and non-destructive interference;
f. Define Brewster's Angle; and,
g. Practice and demonstration of skills listed above.

Summary:

Review the main lesson points using the suggested texts listed in the reference section of this module. Hold class discussion and answer student questions.

Next Lesson Assignment:

MASTER Technical Module (LSR-G2) pertaining to emission and absorption of light.

LSR-G1-HO
Review Characteristics of Light
Attachment 1: **MASTER** Handout

Objective(s):

Upon completion of this unit the student will be able to:

a. Define and understand the wave nature of light;
b. Define polarization;
c. Define monochromaticity;
d. Define temporal and spatial coherence;
e. Explain constructive and non-destructive interference; and,
f. Define Brewster's Angle.

Module Outline:

I. Discuss and Review the Characteristic of Light
   A. Discuss the following wave properties of light
      1. Frequency
      2. Wavelength
      3. Phase
      4. Amplitude
      5. The electromagnetic spectrum
   B. Define polarization
      (Review module LSR-E8 "Study Polarization"
   C. Define monochromaticity
   D. Define temporal and spatial coherence
   E. Explain constructive and non-destructive interference
      (Review module LSR-E7 "Study Diffraction"
   F. Define and demonstrate Brewster's Angle
      (Review module LSR-E8 "Study Polarization"
   G. Practice and demonstration of skills listed above

ERIC

Successful completion of this technical module will be based on the students' successful completion of the following components:

a. Define and understand the wave nature of light;
b. Define polarization;
c. Define monochromaticity;
d. Define temporal and spatial coherence;
e. Explain constructive and non-destructive interference;
f. Define Brewster's Angle; and,
g. Practice and demonstration of skills listed above.

Rules of Conduct

Students must behave in a professional and responsible manner, observing all laser safety rules as outlined in ANSI-Z136.1, *Safe Use of Lasers*.

LASER MACHINING SERIES

MASTER Technical Module No. LSR-G2

Subject: Laser Machining **Time:** 12 Hrs.

Duty: Investigate Industrial Laser Systems
Task: Investigate Emission and Absorption of Light

Objective(s):

Upon completion of this unit the student will be able to:

a. Determine energy of a photon;
b. Perform conversion of energy units;
c. Describe spontaneous absorption of a photon by an atom;
d. Describe spontaneous emission of a photon by an atom;
e. Describe stimulated emission of a photon by an atom;
f. Describe three and four-level laser systems;
g. Explain Doppler broadening of a spectral line;
h. Measure the emission spectra of a gas;
i. Describe three and four-level laser systems;
j. Use the exponential law of absorption;
k. Calculate the optical density of a filter;
l. Use optical filters; and,
m. Calculate the gain coefficient of a laser.

Instructional Materials:

Introduction to Lasers, CORD Communications, Laser Electro-Optics Series, Latest Edition
MASTER Handout (LSR-G2-HO)
MASTER Laboratory Exercise (LSR-G2-LE1)
MASTER Laboratory Exercise (LSR-G2-LE2)
MASTER Laboratory Aid (LSR-G2-LA)

Note: All components available inexpensively from Edmund Scientific, Inc.

References:

Light Sources and Wave Optics, CORD Communications, Laser Electro-Optics Series, Latest Edition
Introduction to Classical and Modern Optics, Meyer-Arendt, Jurgen R., Prentice Hall Publishing, Latest Edition

Introduction to Lasers, CORD Communications, Laser Electro-Optics Series, Latest Edition

ANSI-Z136.1 (1993), *Safe Use of Lasers,* Laser Institute of America, (Publication No. 106), Latest Edition

An Introduction to Lasers and Their Applications, O'Shea, Callen, Rhodes, Addison-Wesley Publishers, Latest Edition

Industrial Applications of Lasers, Ready, John, F., Academic Press, Latest Edition

Understanding Lasers - An Entry-Level Guide, Hecht, Jeff, IEEE Press, Latest Edition

Video(s): *Video Demonstrations in Lasers and Optics,* MIT Center for Advanced Engineering Study, Latest Edition

Introduction to Laser Safety and Laser Hazards Video Training Module, Laser Institute of America, Publication No.115, Latest Edition

Student Preparation:

Students should have previously completed the following Technical Modules:

LSR-A1 through LSR-A4 "Practice Laser Safety"
LSR-B1 through LSR-B9 "Apply Mathematical Concepts"
LSR-E1 through LSR-E9 "Apply Concepts of Modern Optics"
LSR-G1 "Review Characteristics of Light"

Introduction:

The laser is a light source that exhibits unique properties that are unlike any other light source. Its output is coherent, monochromatic, and highly directional. It can travel long distances with minimum dispersion, can be focused to very small spots with very high energy density, and can be made to constructively and destructively interfere with itself. Lasers are used in materials processing, communications, medical applications, consumer applications, research, and many other applications. This module discusses the principles of emission and absorption of light including population inversion, spontaneous absorption, spontaneous and stimulated emission, Doppler broadening, and emission spectra of gases.

Presentation Outline:

I. Discuss Emission and Absorption of Light
   A. Determine energy of a photon
   B. Perform conversion of energy units
   C. Describe spontaneous absorption of a photon by an atom
   D. Describe spontaneous emission of a photon by an atom
   E. Describe stimulated emission of a photon by an atom

F. Describe three and four-level laser systems
G. Explain Doppler broadening of a spectral line
H. Measure the emission spectra of a gas
I. Describe three and four-level laser systems
J. Use the exponential law of absorption
K. Calculate the optical density of a filter
L. Use optical filters
M. Calculate the gain coefficient of a laser
N. Practice and demonstration of skills listed above

Practical Application:

Perform the following experiments from ***Introduction to Lasers,*** CORD Communications, Laser Electro-Optics Series, Latest Edition:

a. Line Spectra of Gases;
b. Absorption Spectra of Laser Rods;
c. Exponential Law of Absorption; and,
d. Gain in a Laser.

Evaluation and/or Verification:

Successful completion of this technical module will be based on the students' successful completion of the following components:

a. Determine energy of a photon;
b. Perform conversion of energy units;
c. Describe spontaneous absorption of a photon by an atom;
d. Describe spontaneous emission of a photon by an atom;
e. Describe stimulated emission of a photon by an atom;
f. Describe three and four-level laser systems;
g. Explain Doppler broadening of a spectral line;
h. Measure the emission spectra of a gas;
i. Describe three and four-level laser systems;
j. Use the exponential law of absorption;
k. Calculate the optical density of a filter;
l. Use optical filters;
m. Calculate the gain coefficient of a laser; and,
n. Practice and demonstration of skills listed above.

Summary:

Review the main lesson points using the suggested texts listed in the reference section of this module. Hold class discussion and answer student questions.

Next Lesson Assignment:

MASTER Technical Module (LSR-G3) pertaining to optical cavities and laser modes.

LSR-G2-HO
Investigate Emission and Absorption of Light
Attachment 1: **MASTER** Handout

Objective(s):

Upon completion of this unit the student will be able to:

a. Determine energy of a photon;
b. Perform conversion of energy units;
c. Describe spontaneous absorption of a photon by an atom;
d. Describe spontaneous emission of a photon by an atom;
e. Describe stimulated emission of a photon by an atom;
f. Describe three and four-level laser systems;
g. Explain Doppler broadening of a spectral line;
h. Measure the emission spectra of a gas;
i. Describe three and four-level laser systems;
j. Use the exponential law of absorption;
k. Calculate the optical density of a filter;
l. Use optical filters; and,
m. Calculate the gain coefficient of a laser.

Module Outline:

I. Discuss Emission and Absorption of Light
   A. Determine energy of a photon
   B. Perform conversion of energy units
   C. Describe spontaneous absorption of a photon by an atom
   D. Describe spontaneous emission of a photon by an atom
   E. Describe stimulated emission of a photon by an atom
   F. Describe three and four-level laser systems
   G. Explain Doppler broadening of a spectral line
   H. Measure the emission spectra of a gas
   I. Describe three and four-level laser systems
   J. Use the exponential law of absorption
   K. Calculate the optical density of a filter
   L. Use optical filters
   M. Calculate the gain coefficient of a laser
   N. Practice and demonstration of skills listed above

LSR-G2-LE1
Investigate Emission and Absorption of Light
Attachment 2: **MASTER** Laboratory Exercise No. 1

Students shall perform the following experiments from ***Introduction to Lasers,*** CORD Communications, Laser Electro-Optics Series, Latest Edition:

a. Line Spectra of Gases;
b. Absorption Spectra of Laser Rods;
c. Exponential Law of Absorption; and,
d. Gain in a Laser.

Successful completion of this technical module will be based on the students' successful completion of the following components:

a. Determine energy of a photon;
b. Perform conversion of energy units;
c. Describe spontaneous absorption of a photon by an atom;
d. Describe spontaneous emission of a photon by an atom;
e. Describe stimulated emission of a photon by an atom;
f. Describe three and four-level laser systems;
g. Explain Doppler broadening of a spectral line;
h. Measure the emission spectra of a gas;
i. Describe three and four-level laser systems;
j. Use the exponential law of absorption;
k. Calculate the optical density of a filter;
l. Use optical filters;
m. Calculate the gain coefficient of a laser; and,
n. Practice and demonstration of skills listed above.

Rules of Conduct

Students must behave in a professional and responsible manner, observing all laser safety rules as outlined in ANSI-Z136.1, *Safe Use of Lasers*.

LASER MACHINING SERIES

MASTER Technical Module No. LSR-G3

Subject: Laser Machining **Time:** 12 Hrs.

Duty: Investigate Industrial Laser Systems
Task: Discuss Optical Cavities and Laser Modes

Objective(s):

Upon completion of this unit the student will be able to:

a. Determine gain and loss in optical cavities;
b. Discuss cavity configurations;
c. Determine laser modes;
d. Determine laser output spectral distribution;
e. Perform cleaning of optical components; and,
f. Perform alignment of optical cavities.

Instructional Materials:

Introduction to Lasers, CORD Communications, Laser Electro-Optics Series, Latest Edition
MASTER Handout (LSR-G3-HO)
MASTER Laboratory Exercise (LSR-G3-LE1)
MASTER Laboratory Exercise (LSR-G3-LE2)
MASTER Laboratory Aid (LSR-G3-LA)

Note: All components available inexpensively from Edmund Scientific, Inc.

References:

Light Sources and Wave Optics, CORD Communications, Laser Electro-Optics Series, Latest Edition
Introduction to Classical and Modern Optics, Meyer-Arendt, Jurgen R., Prentice Hall Publishing, Latest Edition
Introduction to Lasers, CORD Communications, Laser Electro-Optics Series, Latest Edition
ANSI-Z136.1 (1993), *Safe Use of Lasers,* Laser Institute of America, (Publication No. 106), Latest Edition
An Introduction to Lasers and Their Applications, O'Shea, Callen, Rhodes, Addison-Wesley Publishers, Latest Edition
Industrial Applications of Lasers, Ready, John, F., Academic Press, Latest Edition

Understanding Lasers - An Entry-Level Guide, Hecht, Jeff, IEEE Press, Latest Edition

Video(s): *Video Demonstrations in Lasers and Optics,* MIT Center for Advanced Engineering Study, Latest Edition

Introduction to Laser Safety and Laser Hazards Video Training Module, Laser Institute of America, Publication No.115, Latest Edition

Student Preparation:

Students should have previously completed the following Technical Modules:

LSR-A1 through LSR-A4 "Practice Laser Safety"
LSR-B1 through LSR-B9 "Apply Mathematical Concepts"
LSR-E1 through LSR-E9 "Apply Concepts of Modern Optics"
LSR-G2 "Investigate Emission and Absorption of Light"

Introduction:

The amplitude of a light beam is increased in a laser by multiple passes of coherent light waves through the active medium. The process is accomplished by an active medium placed between a pair of mirrors that act as a feedback mechanism. During each trip between the mirrors, the light waves are amplified by the active medium and reduced by internal losses and laser output. A number of different combinations of mirrors, plane and curved, have been used in lasers. The pair of mirrors, axially arranged around an intervening volume, is called a laser cavity or laser resonator. Only certain frequencies of Electromagnetic radiation will be supported within this volume. These frequencies of oscillation are referred to as axial or longitudinal modes. This module discusses gain and loss in an optical cavity, cavity configurations, standing waves in optical cavities, and the effects of all these factors on laser operation and output.

Presentation Outline:

I. Discuss Optical Cavities and Modes of Oscillation
   A. Determine gain and loss in optical cavities
   B. Discuss cavity configurations
   C. Determine laser modes
   D. Determine laser output spectral distribution
   E. Perform cleaning of optical components
   F. Perform alignment of optical cavities
   G. Practice and demonstration of skills listed above

Practical Application:

Perform the following experiment from *Introduction to Lasers,* CORD Communications, Laser Electro-Optics Series, Latest Edition:

a. Cleaning and Alignment of a HeNe Laser.

Evaluation and/or Verification:

Successful completion of this technical module will be based on the students' successful completion of the following components:

a. Determine gain and loss in optical cavities;
b. Discuss cavity configurations;
c. Determine laser modes;
d. Determine laser output spectral distribution;
e. Perform cleaning of optical components;
f. Perform alignment of optical cavities; and,
g. Practice and demonstration of skills listed above.

Summary:

Review the main lesson points using the suggested texts listed in the reference section of this module. Hold class discussion and answer student questions.

Next Lesson Assignment:

MASTER Technical Module (LSR-G4) pertaining to temporal characteristics of lasers.

LSR-G3-HO
Discuss Optical Cavities and Laser Modes
Attachment 1: **MASTER** Handout

Objective(s):

Upon completion of this unit the student will be able to:

a. Determine gain and loss in optical cavities;
b. Discuss cavity configurations;
c. Determine laser modes;
d. Determine laser output spectral distribution;
e. Perform cleaning of optical components; and,
f. Perform alignment of optical cavities.

Module Outline:

I. Discuss Optical Cavities and Modes of Oscillation
   A. Determine gain and loss in optical cavities
   B. Discuss cavity configurations
   C. Determine laser modes
   D. Determine laser output spectral distribution
   E. Perform cleaning of optical components
   F. Perform alignment of optical cavities
   G. Practice and demonstration of skills listed above

LSR-G3-LE1
Discuss Optical Cavities and Laser Modes
Attachment 2: **MASTER** Laboratory Exercise No. 1

Students shall perform the following experiment from ***Introduction to Lasers,*** CORD Communications, Laser Electro-Optics Series, Latest Edition:

a. Cleaning and Alignment of a HeNe Laser.

LSR-G3-LE2
Discuss Optical Cavities and Laser Modes
Attachment 3: **MASTER** Laboratory Exercise No. 2

Successful completion of this technical module will be based on the students' successful completion of the following components:

a. Determine gain and loss in optical cavities;
b. Discuss cavity configurations;
c. Determine laser modes;
d. Determine laser output spectral distribution;
e. Perform cleaning of optical components;
f. Perform alignment of optical cavities; and,
g. Practice and demonstration of skills listed above.

Rules of Conduct

Students must behave in a professional and responsible manner, observing all laser safety rules as outlined in ANSI-Z136.1, *Safe Use of Lasers*.

LASER MACHINING SERIES

MASTER Technical Module No. LSR-G4

Subject: Laser Machining **Time:** 18 Hrs.

Duty: Investigate Industrial Laser Systems
Task: Discuss Temporal Characteristics of Lasers

Objective(s):

Upon completion of this unit the student will be able to:

a. Discuss the following operating modes for pulsed lasers;
   (1) Normal Pulsed Mode;
   (2) Q-Switched Mode;
   (3) Mode-Locking;
b. Calculate pulse parameters for single- and repetitively-pulsed lasers;
   (1) Pulse duration;
   (2) Pulse width;
   (3) Pulse repetition rate;
   (4) Pulse energy and power;
   (5) Duty cycle;
c. Determine longitudinal coherence length; and,
d. Use etalons for increasing coherence length.

Instructional Materials:

Introduction to Lasers, CORD Communications, Laser Electro-Optics Series, Latest Edition
MASTER Handout (LSR-G4-HO)
MASTER Laboratory Exercise (LSR-G4-LE1)
MASTER Laboratory Exercise (LSR-G4-LE2)
MASTER Laboratory Aid (LSR-G4-LA)

Note: All components available inexpensively from Edmund Scientific, Inc.

References:

Light Sources and Wave Optics, CORD Communications, Laser Electro-Optics Series, Latest Edition
Introduction to Classical and Modern Optics, Meyer-Arendt, Jurgen R., Prentice Hall Publishing, Latest Edition
Introduction to Lasers, CORD Communications, Laser Electro-Optics Series, Latest Edition

ANSI-Z136.1 (1993), ***Safe Use of Lasers,*** Laser Institute of America, (Publication No. 106), Latest Edition

An Introduction to Lasers and Their Applications, O'Shea, Callen, Rhodes, Addison-Wesley Publishers, Latest Edition

Industrial Applications of Lasers, Ready, John, F., Academic Press, Latest Edition

Understanding Lasers - An Entry-Level Guide, Hecht, Jeff, IEEE Press, Latest Edition

Video(s): ***Video Demonstrations in Lasers and Optics,*** MIT Center for Advanced Engineering Study, Latest Edition

Introduction to Laser Safety and Laser Hazards Video Training Module, Laser Institute of America, Publication No.115, Latest Edition

Student Preparation:

Students should have previously completed the following Technical Modules:

LSR-A1 through LSR-A4 "Practice Laser Safety"
LSR-B1 through LSR-B9 "Apply Mathematical Concepts"
LSR-E1 through LSR-E9 "Apply Concepts of Modern Optics"
LSR-G3 "Discuss Optical Cavities and Laser Modes"

Introduction:

One of the most important characteristics of any laser is the temporal distribution of its output. Lasers are generally divided into two broad groups: (1) Continuous wave (CW) and (2) Pulsed. Continuous wave lasers have an output whose does not fluctuate over time. Pulsed lasers are lasers that output energy in small bursts Pulsed lasers may be further subdivided according to pulse length and method for producing such pulses. The three basic categories for pulsed lasers are:

a. Normal pulsed mode;
b. Q-switched mode; and,
c. Mode-locked.

In addition, the *coherence length*, or the distance over which the laser's output maintains its coherence properties, is strongly dependent on the temporal distribution of a laser's output. In this module, we will discuss the temporal characteristics of lasers and their effect on output power, energy, and coherence properties.

Presentation Outline:

I. Discuss Temporal Characteristics of Lasers
  A. Discuss the following operating modes for pulsed lasers
    1. Normal Pulsed Mode

2. Q-Switched Mode
3. Mode-Locking

B. Calculate pulse parameters for single- and repetitively-pulsed lasers
1. Pulse duration
2. Pulse width
3. Pulse repetition rate
4. Pulse energy and power
5. Duty cycle

C. Determine longitudinal coherence length
D. Use etalons for increasing coherence length
E. Practice and demonstration of skills listed above

Practical Application:

Perform the following experiment from *Introduction to Lasers,* CORD Communications, Laser Electro-Optics Series, Latest Edition:
a. Measurement of Output Parameters of Pulsed Lasers

Evaluation and/or Verification:

Successful completion of this technical module will be based on the students' successful completion of the following components:
a. Discuss the following operating modes for pulsed lasers;
(1) Normal Pulsed Mode;
(2) Q-Switched Mode;
(3) Mode-Locking;
b. Calculate pulse parameters for single- and repetitively-pulsed lasers;
(1) Pulse duration;
(2) Pulse width;
(3) Pulse repetition rate;
(4) Pulse energy and power;
(5) Duty cycle;
c. Determine longitudinal coherence length;
d. Use etalons for increasing coherence length; and,
e. Practice and demonstration of stills listed above.

Summary:

Review the main lesson points using the suggested texts listed in the reference section of this module. Hold class discussion and answer student questions.

Next Lesson Assignment:

MASTER Technical Module (LSR-G5) pertaining to investigating spatial characteristics of lasers.

LSR-G4-HO
Discuss Temporal Characteristics of Lasers
Attachment 1: **MASTER** Handout

Objective(s):

Upon completion of this unit the student will be able to:

a. Discuss the following operating modes for pulsed lasers;
   (1) Normal Pulsed Mode;
   (2) Q-Switched Mode;
   (3) Mode-Locking;
b. Calculate pulse parameters for single- and repetitively-pulsed lasers;
   (1) Pulse duration;
   (2) Pulse width;
   (3) Pulse repetition rate;
   (4) Pulse energy and power;
   (5) Duty cycle;
c. Determine longitudinal coherence length; and,
d. Use etalons for increasing coherence length.

Module Outline:

I. Discuss Temporal Characteristics of Lasers
   A. Discuss the following operating modes for pulsed lasers
      1. Normal Pulsed Mode
      2. Q-Switched Mode
      3. Mode-Locking
   B. Calculate pulse parameters for single- and repetitively-pulsed lasers
      1. Pulse duration
      2. Pulse width
      3. Pulse repetition rate
      4. Pulse energy and power
      5. Duty cycle
   C. Determine longitudinal coherence length
   D. Use etalons for increasing coherence length
   E. Practice and demonstration of skills listed above

LSR-G4-LE1
Discuss Temporal Characteristics of Lasers
Attachment 2: **MASTER** Laboratory Exercise No. 1

Students shall perform the following experiment from ***Introduction to Lasers,*** CORD Communications, Laser Electro-Optics Series, Latest Edition:

a. Measurement of Output Parameters of Pulsed Lasers

LSR-G4-LE2
Discuss Temporal Characteristics of Lasers
Attachment 3: **MASTER** Laboratory Exercise No. 2

Successful completion of this technical module will be based on the students' successful completion of the following components:

a. Discuss the following operating modes for pulsed lasers;
   (1) Normal Pulsed Mode;
   (2) Q-Switched Mode;
   (3) Mode-Locking;
b. Calculate pulse parameters for single- and repetitively-pulsed lasers;
   (1) Pulse duration;
   (2) Pulse width;
   (3) Pulse repetition rate;
   (4) Pulse energy and power;
   (5) Duty cycle;
c. Determine longitudinal coherence length;
d. Use etalons for increasing coherence length; and,
e. Practice and demonstration of stills listed above.

Rules of Conduct

Students must behave in a professional and responsible manner, observing all laser safety rules as outlined in ANSI-Z136.1, *Safe Use of Lasers*.

LASER MACHINING SERIES

MASTER Technical Module No. LSR-G5

Subject: Laser Machining **Time:** 18 Hrs.

Duty: Investigate Industrial Laser Systems
Task: Investigate Spatial Characteristics of Lasers

Objective(s):

Upon completion of this unit the student will be able to:

a. Explain Transverse Electromagnetic Modes (TEM_{nm});
b. Discuss the generation of the TEM_{00} mode and its properties;
c. Calculate and measure beam divergence;
d. Calculate "diffraction-limited" spot size of a focused beam;
e. Determine the transmission of a beam through an aperture;
f. Determine near- and far-field distances; and,
g. Calculate the irradiance of a focused spot.

Instructional Materials:

Introduction to Lasers, CORD Communications, Laser Electro-Optics Series, Latest Edition
MASTER Handout (LSR-G5-HO)
MASTER Laboratory Exercise (LSR-G5-LE1)
MASTER Laboratory Exercise (LSR-G5-LE2)
MASTER Laboratory Aid (LSR-G5-LA)

Note: All components available inexpensively from Edmund Scientific, Inc.

References:

Light Sources and Wave Optics, CORD Communications, Laser Electro-Optics Series, Latest Edition
Introduction to Classical and Modern Optics, Meyer-Arendt, Jurgen R., Prentice Hall Publishing, Latest Edition
Introduction to Lasers, CORD Communications, Laser Electro-Optics Series, Latest Edition
ANSI-Z136.1.(1993), *Safe Use of Lasers,* Laser Institute of America, (Publication No. 106), Latest Edition
An Introduction to Lasers and Their Applications, O'Shea, Callen, Rhodes, Addison-Wesley Publishers, Latest Edition

Industrial Applications of Lasers, Ready, John, F., Academic Press, Latest Edition

Understanding Lasers - An Entry-Level Guide, Hecht, Jeff, IEEE Press, Latest Edition

Video(s): ***Video Demonstrations in Lasers and Optics,*** MIT Center for Advanced Engineering Study, Latest Edition

Introduction to Laser Safety and Laser Hazards Video Training Module, Laser Institute of America, Publication No.115, Latest Edition

Student Preparation:

Students should have previously completed the following Technical Modules:

LSR-A1 through LSR-A4 "Practice Laser Safety"
LSR-B1 through LSR-B9 "Apply Mathematical Concepts"
LSR-E1 through LSR-E9 "Apply Concepts of Modern Optics"
LSR-G4 "Discuss Temporal Characteristics of Lasers"

Introduction:

The spatial characteristics of a laser are very important in many applications. The spatial distribution of a laser's output is the measure of the intensity profile of the beam. Many modes can oscillate in a laser cavity and as a result, the output intensity profile of a laser is a superposition of many of these modes. The distribution of these modes is know as the Transverse Electromagnetic Mode (TEM) of the laser. For laser applications requiring the focusing of a laser beam to a very small spot such as cutting, drilling, welding, marking and etching, etc., the diameter of the focused spot depends greatly on the TEM output and divergence of the laser beam. This module discusses (1) transverse electromagnetic modes in lasers and how they can be controlled; (2) measurement of the TEM_{00} profile; (3) determination and control of laser beam divergence and; (4) determination of focused spot size and irradiance.

Presentation Outline:

I. Investigate Spatial Characteristics of Lasers
   - A. Explain Transverse Electromagnetic Modes (TEM_{nm})
   - B. Discuss the generation of the TEM_{00} mode and its properties
   - C. Calculate and measure beam divergence
   - D. Calculate "diffraction-limited" spot size of a focused beam
   - E. Determine the transmission of a beam through an aperture
   - F. Determine near- and far-field distances
   - G. Calculate the irradiance of a focused spot
   - H. Practice and demonstration of skills listed above

Practical Application:

Perform the following experiments from *Introduction to Lasers,* CORD Communications, Laser Electro-Optics Series, Latest Edition:

a. Beam Diameter by Transmission through an Aperture; and,
b. Beam Diameter by Scanning Beam Profile.

Evaluation and/or Verification:

Successful completion of this technical module will be based on the students' successful completion of the following components:

a. Explain Transverse Electromagnetic Modes (TEM_{nm});
b. Discuss the generation of the TEM_{00} mode and its properties;
c. Calculate and measure beam divergence;
d. Calculate "diffraction-limited" spot size of a focused beam;
e. Determine the transmission of a beam through an aperture;
f. Determine near- and far-field distances;
g. Calculate the irradiance of a focused spot; and,
h. Practice and demonstration of skills listed above.

Summary:

Review the main lesson points using the suggested texts listed in the reference section of this module. Hold class discussion and answer student questions.

Next Lesson Assignment:

MASTER Technical Module (LSR-G6) pertaining to laser classifications and characteristics.

LSR-G5-HO
Investigate Spatial Characteristics of Lasers
Attachment 1: **MASTER** Handout

Objective(s):

Upon completion of this unit the student will be able to:

a. Explain Transverse Electromagnetic Modes (TEM_{nm});
b. Discuss the generation of the TEM_{00} mode and its properties;
c. Calculate and measure beam divergence;
d. Calculate "diffraction-limited" spot size of a focused beam;
e. Determine the transmission of a beam through an aperture;
f. Determine near- and far-field distances; and,
g. Calculate the irradiance of a focused spot.

Module Outline:

I. Investigate Spatial Characteristics of Lasers
   A. Explain Transverse Electromagnetic Modes (TEM_{nm})
   B. Discuss the generation of the TEM_{00} mode and its properties
   C. Calculate and measure beam divergence
   D. Calculate "diffraction-limited" spot size of a focused beam
   E. Determine the transmission of a beam through an aperture
   F. Determine near- and far-field distances
   G. Calculate the irradiance of a focused spot
   H. Practice and demonstration of skills listed above

LSR-G5-LE1
Investigate Spatial Characteristics of Lasers
Attachment 2: **MASTER** Laboratory Exercise No. 1

Students shall perform the following experiments from ***Introduction to Lasers,*** CORD Communications, Laser Electro-Optics Series, Latest Edition:

a. Beam Diameter by Transmission through an Aperture; and,
b. Beam Diameter by Scanning Beam Profile.

Successful completion of this technical module will be based on the students' successful completion of the following components:

a. Explain Transverse Electromagnetic Modes (TEM_{nm});
b. Discuss the generation of the TEM_{00} mode and its properties;
c. Calculate and measure beam divergence;
d. Calculate "diffraction-limited" spot size of a focused beam;
e. Determine the transmission of a beam through an aperture;
f. Determine near- and far-field distances;
g. Calculate the irradiance of a focused spot; and,
h. Practice and demonstration of skills listed above.

Rules of Conduct

Students must behave in a professional and responsible manner, observing all laser safety rules as outlined in ANSI-Z136.1, *Safe Use of Lasers*.

LASER MACHINING SERIES

MASTER Technical Module No. LSR-G6

Subject: Laser Machining **Time:** 18 Hrs.

Duty: Investigate Industrial Laser Systems
Task: Discuss Laser Classifications & Characteristics

Objective(s):

Upon completion of this unit the student will be able to:

a. Identify the principle lasing wavelengths for selected lasers;
b. Classify the output pulse duration range for the following modes of operation;
   (1) Mode-Locked;
   (2) Q-switched;
   (3) Repetitively Q-Switched;
   (4) Normal Pulse;
   (5) Continuous-Wave;
c. Identify typical laser power ranges for selected lasers;
d. Define the operating efficiency of a laser;
e. Define the operating characteristics for the following types of lasers;
   (1) Gas Lasers;
   (2) Solid State Lasers;
   (3) Semiconductor Lasers; and,
   (4) Dye Lasers.

Instructional Materials:

Introduction to Lasers, CORD Communications, Laser Electro-Optics Series, Latest Edition
MASTER Handout (LSR-G6-HO)
MASTER Laboratory Exercise (LSR-G6-LE)
MASTER Laboratory Aid (LSR-G6-LA)

Note: All components available inexpensively from Edmund Scientific, Inc.

References:

Light Sources and Wave Optics, CORD Communications, Laser Electro-Optics Series, Latest Edition
Introduction to Classical and Modern Optics, Meyer-Arendt, Jurgen R., Prentice Hall Publishing, Latest Edition

Introduction to Lasers, CORD Communications, Laser Electro-Optics Series, Latest Edition

ANSI-Z136.1 (1993), *Safe Use of Lasers,* Laser Institute of America, (Publication No. 106), Latest Edition

An Introduction to Lasers and Their Applications, O'Shea, Callen, Rhodes, Addison-Wesley Publishers, Latest Edition

Industrial Applications of Lasers, Ready, John, F., Academic Press, Latest Edition

Understanding Lasers - An Entry-Level Guide, Hecht, Jeff, IEEE Press, Latest Edition

Video(s): *Video Demonstrations in Lasers and Optics,* MIT Center for Advanced Engineering Study, Latest Edition

Introduction to Laser Safety and Laser Hazards Video Training Module, Laser Institute of America, Publication No.115, Latest Edition

Student Preparation:

Students should have previously completed the following Technical Modules:

LSR-A1 through LSR-A4 "Practice Laser Safety"
LSR-B1 through LSR-B9 "Apply Mathematical Concepts"
LSR-E1 through LSR-E9 "Apply Concepts of Modern Optics"
LSR-G5 "Investigate Spatial Characteristics of Lasers"

Introduction:

Lasers are being used in a multitude of different industries for applications ranging from materials processing to communications to medical applications. Lasers are generally characterized by its wavelength, output power level, mode of operation (cw or pulsed), and the duration of its output. A system that is suitable for a given application can be chosen on the basis of the characteristics of that laser system relative the specific requirements of the particular application. In this module, we will present a survey of the different types of lasers, their operating parameters, and some typical applications.

Presentation Outline:

I. Discuss Laser Classifications and Characteristics
   A. Identify the principle lasing wavelengths for selected lasers
   B. Classify the output pulse duration range for the following modes of operation
      1. Mode-Locked
      2. Q-switched
      3. Repetitively Q-Switched

4. Normal Pulse
5. Continuous-Wave

C. Identify typical laser power ranges for selected lasers
D. Define the operating efficiency of a laser
E. Define the operating characteristics for the following types of lasers:
   1. Gas Lasers
      a. Nitrogen
      b. HeCd
      c. Argon
      d. HeNe
      e. CO
      f. CO_2
   2. Solid State Lasers
      a. Ruby
      b. Nd:Glass
      c. Nd:YAG
   3. Semiconductor Lasers
      a. GaAs (single diode)
      b. GaAs (diode array)
   4. Dye Lasers
      a. CW - Argon laser pumped
      b. Normal pulsed - flashlamp pumped
      c. Normal pulsed - Nitrogen laser pumped

Practical Application:

Arrange an industry site visit to one or several companies involved in the use of lasers materials processing. Pay special attention to the types of lasers used, the output laser parameters, the types of materials being processed, limitations of the specific lasers, and the electrical and safety precautions used. If a field trip is not feasible, use the SME video series on Lasers in Manufacturing to demonstrate the many applications of lasers in industry.

Evaluation and/or Verification:

Successful completion of this technical module will be based on the students' successful completion of the following components:

I. Discuss Laser Classifications and Characteristics;
   A. Identify the principle lasing wavelengths for selected lasers;
   B. Classify the output pulse duration range for the following modes of operation;
      1. Mode-Locked;
      2. Q-switched;
      3. Repetitively Q-Switched;

4. Normal Pulse;
5. Continuous-Wave;

C. Identify typical laser power ranges for selected lasers;
D. Define the operating efficiency of a laser;
E. Define the operating characteristics for the following types of lasers;
   1. Gas Lasers;
      a. Nitrogen;
      b. HeCd;
      c. Argon;
      d. HeNe;
      e. CO;
      f. CO_2;
   2. Solid State Lasers;
      a. Ruby;
      b. Nd:Glass;
      c. Nd:YAG;
   3. Semiconductor Lasers;
      a. GaAs (single diode);
      b. GaAs (diode array);
   4. Dye Lasers;
      a. CW - Argon laser pumped;
      b. Normal pulsed - flashlamp pumped; and,
      c. Normal pulsed - Nitrogen laser pumped.

Summary:

Review the main lesson points using the suggested texts listed in the reference section of this module. Hold class discussion and answer student questions.

Next Lesson Assignment:

MASTER Technical Module (LSR-H1) pertaining to understanding PC basics.

LSR-G6-HO
Discuss Laser Classifications and Characteristics
Attachment 1: **MASTER** Handout

Objective(s):

Upon completion of this unit the student will be able to:

a. Identify the principle lasing wavelengths for selected lasers;
b. Classify the output pulse duration range for the following modes of operation;
   (1) Mode-Locked;
   (2) Q-switched;
   (3) Repetitively Q-Switched;
   (4) Normal Pulse;
   (5) Continuous-Wave;
c. Identify typical laser power ranges for selected lasers;
d. Define the operating efficiency of a laser;
e. Define the operating characteristics for the following types of lasers;
   (1) Gas Lasers;
   (2) Solid State Lasers;
   (3) Semiconductor Lasers; and,
   (4) Dye Lasers.

Module Outline:

I. Discuss Laser Classifications and Characteristics
   A. Identify the principle lasing wavelengths for selected lasers
   B. Classify the output pulse duration range for the following modes of operation
      1. Mode-Locked
      2. Q-switched
      3. Repetitively Q-Switched
      4. Normal Pulse
      5. Continuous-Wave
   C. Identify typical laser power ranges for selected lasers
   D. Define the operating efficiency of a laser
   E. Define the operating characteristics for the following types of lasers:
      1. Gas Lasers
         a. Nitrogen
         b. HeCd
         c. Argon
         d. HeNe
         e. CO
         f. CO_2

2. Solid State Lasers
   a. Ruby
   b. Nd:Glass
   c. Nd:YAG
3. Semiconductor Lasers
   a. GaAs (single diode)
   b. GaAs (diode array)
4. Dye Lasers
   a. CW - Argon laser pumped
   b. Normal pulsed - flashlamp pumped
   c. Normal pulsed - Nitrogen laser pumped

LSR-G6-LE
Discuss Laser Classifications and Characteristics
Attachment 2: **MASTER** Laboratory Exercise

Successful completion of this technical module will be based on the students' successful completion of the following components:

I. Discuss Laser Classifications and Characteristics;
   - A. Identify the principle lasing wavelengths for selected lasers;
   - B. Classify the output pulse duration range for the following modes of operation;
     1. Mode-Locked;
     2. Q-switched;
     3. Repetitively Q-Switched;
     4. Normal Pulse;
     5. Continuous-Wave;
   - C. Identify typical laser power ranges for selected lasers;
   - D. Define the operating efficiency of a laser;
   - E. Define the operating characteristics for the following types of lasers;
     1. Gas Lasers;
        a. Nitrogen;
        b. HeCd;
        c. Argon;
        d. HeNe;
        e. CO;
        f. CO_2;
     2. Solid State Lasers;
        a. Ruby;
        b. Nd:Glass;
        c. Nd:YAG;
     3. Semiconductor Lasers;
        a. GaAs (single diode);
        b. GaAs (diode array);
     4. Dye Lasers;
        a. CW - Argon laser pumped;
        b. Normal pulsed - flashlamp pumped; and,
        c. Normal pulsed - Nitrogen laser pumped.

Rules of Conduct

Students must behave in a professional and responsible manner, observing all laser safety rules as outlined in ANSI-Z136.1, *Safe Use of Lasers*.

Laser Machinist .... apply the principles of electronics, lasers, optics, materials, engineering documentation, CAD/CAM, and systems integration to manufacture products following current industry and company standards.

Duties	Tasks												
A Practice Laser Safety	A-1 Discuss laser safety standards	A-2 Discuss basic laser principles	A-3 Discuss laser hazards	A-4 Discuss control measures									
B Apply Mathematical Concepts	B-1 Perform basic mathematical functions	B-2 Perform algebraic functions	B-3 Study exponents and right triangle geometry	B-4 Study elements of plane and solid geometry	B-5 Perform data evaluation and statistical analysis	B-6 Perform proportioning and interpolation	B-7 Perform basic trigonometric calculations	B-8 Investigate vectors and vector systems	B-9 Investigate the Cartesian Coordiante System				
C Perform Measurement and Inspection	C-1 Study basics of metrology	C-2 Select instruments used for measurement	C-3 Study datums and the three plane concept	C-4 Select gauging tools	C-5 Use CMM for location of features	C-6 Perform measurements for orientation tolerances	C-7 Perform measurment by optical comparison	C-8 Perform measurements for circularity, concentricity, runout, and straightness tolerances	C-9 Investigate advanced metrology topics				
D Troubleshoot Industrial Electronics and Control	D-1 Perform DC voltage, current, and power measurements	D-2 Perform AC voltage, current, and power measurements	D-3 Investigate digital logic systems	D-4 Investigate diode applications	D-5 Investigate transistors and thyristors	D-6 Investigate operational amplifiers	D-7 Investigate power supply circuits						
E Apply Concepts of Modern Optics	E-1 Study reflection and refraction at plane surfaces	E-2 Perform imaging with a single lens	E-3 Perform imaging with multiple lenses	E-4 Study F-stops and apertures	E-5 Use laser beam-expanding collimators	E-6 Study interference	E-7 Study diffraction	E-8 Study polarization	E-9 Investigate radiometry and photometry				
F Perform CNC Machining	F-1 Apply machine specific nomenclature and terminology	F-2 Investigate the Cartesian coordinate system as applied to a CNC mill or laser	F-3 Apply CNC programming language	F-4 Perform start up, tool changing, and ending of programs	F-5 Perform positioning and basic drilling	F-6 Create a sub-program	F-7 Perform contouring	F-8 Apply tool radius compensation	F-9 Perform program preparation	F-10 Apply special laser coding parameters			
G Investigate Industrial Laser Systems	G-1 Review characteristics of light	G-2 Investigate emission and absorption of light	G-3 Discuss optical cavities and laser modes	G-4 Discuss temporal characteristics of lasers	G-5 Investigate spatial characteristics of lasers	G-6 Discuss laser classifications and characteristics							
H Perform Computer-Aided Drafting (CAD)	H-1 Discuss and understand PC basics	H-2 Discuss CAD basics and file management	H-3 Use drawing settings	H-4 Perform basic editing commands	H-5 Create drawings with accuracy	H-6 Organize drawing information	H-7 Control the display of drawings	H-8 Use intermediate drawing commands	H-9 Perform intermediate editing commands	H-10 Create multi view drawings	H-11 Create sectioned drawings	H-12 Investigate basic dimensioning	H-13 Perform advanced dimensioning
	H-14 Use and manipulate blocks	H-15 Use blocks to automate the drawing process											
I Perform Laser Materials Processing	I-1 Review laser safety standards	I-2 Discuss lasers used for materials processing	I-3 Discuss laser optics and beam characteristics	I-4 Investigate absorption of laser energy	I-5 Use lasers for welding and surface treatment	I-6 Use lasers for material removal							
J Perform Computer-Aided Manufacturing (CAM)	J-1 Discuss and understand the basics of a PC based CAM system	J-2 Discuss basic CAM operations	J-3 Set up cutting tools	J-4 Create simple part profiles	J-5 Create and edit complex part profiles	J-6 Perform roughing, drilling, and counterboring	J-7 Advanced editing of part profiles	J-8 Edit tool paths	J-9 Use construction layers in SmartCAM	J-10 Perform user commands and machine events	J-11 Create families of parts	J-12 Perform CAD/CAM integration	J-13 Perform code generation

LASER MACHINING SERIES

MASTER Technical Module No. LSR-H1

Subject: Laser Machining **Time: 2 Hrs.**

Duty: Perform Computer-Aided Drafting (CAD)
Task: Discuss and Understand PC Basics

Note: AutoCAD® is being used as a typical CAD system

Objective(s):

Upon completion of this unit the student will be able to:
a. Discuss hardware and software basics;
b. Discuss the DOS and Windows operating systems;
c. Discuss file structure and file management; and,
d. Manipulate and manage files.

Instructional Materials:

AutoCAD software: Release 13 (DOS or Windows) preferred but, minimum, Release 12
486 DX2 or Pentium computer (IBM compatible) with SVGA monitor
MASTER Handout (LSR-H1-HO1)
MASTER Handout (LSR-H1-HO2) (File Management in AutoCAD)
MASTER Laboratory Exercise (LSR-H1-LE)

References:

AutoCAD and its Applications; Release 13 for DOS, Shumaker, Terence and Madsen, David, Goodheart-Willcox Publishing, Latest Edition
Discovery AutoCAD R12, Dix, Mark & Riley, Paul, Prentice Hall Publishing, Latest Edition
Inside AutoCAD Release 13c4, Pitzer, David, Soen, Francis, Fulmer, Howard, et al., New Riders Publishing, Latest Edition
Technical Drawing, Giesecke, Frederick, et al., Macmillan Publishing, Latest Edition

Student Preparation:

Students should have previously completed the following Technical Modules:
LSR-B1 through LSR-B9 "Apply Mathematical Concepts"

Introduction:

The objective of Computer Aided Drafting (CAD) is to apply computer technology in the creation and communication of designs. Engineering drawings are an integral part of industry. The drawings or, in a CAD system, the data base, serves as the link between design and manufacturing. Computer technology provides the means of rapidly communicating drawings (created with respect to engineering standards) to manufacturing using a common database. CAD has replaced manual board drafting. CAD has not replaced the concepts and principles used when drafting was performed manually. CAD has, however, improved the productivity of the design/drafting process by automating repetitive tasks. In addition, the overall accuracy of models has improved significantly as a computer system is capable of accuracy of millionths and higher. Students studying this technology will become familiar with the terminology, capabilities, and operation of computer aided drafting software using AutoCAD as a typical CAD program. In this module, the student will demonstrate an understanding of the terminology, nomenclature, and file system used for a typical PC Based CAD system (AutoCAD®).

Presentation Outline:

I. Understand PC Basics
   - A. Discuss hardware and software basics
   - B. Study DOS and windows operating systems
   - C. Discuss directory structure
   - D. Manipulate and manage files

Practical Application:

Students will observe and participate in the discussion of the topics listed above.

Evaluation and/or Verification:

Successful completion of this technical module will be based on the students' successful completion of the following components:

1. Discuss and understand the hardware and software basics of the AutoCAD system;
2. Discuss and understand DOS and windows operating systems;
3. Discuss and understand directory structure; and,
4. Manipulate and manage files.

Summary:

Review the main lesson points using the suggested text(s) listed in the reference section of this module. Hold class discussion and answer student questions.

Next Lesson Assignment:

MASTER Technical Module (LSR-H2) pertaining to CAD basics and file management.

LSR-H1-HO1
Discuss and Understand PC Basics
Attachment 1: **MASTER** Handout No. 1

Objective(s):

Upon completion of this unit the student will be able to:

a. Discuss hardware and software basics;
b. Discuss the DOS and Windows operating systems;
c. Discuss file structure and file management; and,
d. Manipulate and manage files.

Module Outline:

I. Understand PC Basics
   A. Discuss hardware and software basics
   B. Study DOS and windows operating systems
   C. Discuss directory structure
   D. Manipulate and manage files

File Management in AutoCAD

Introduction

Being able to manipulate drawing files well (save, copy, delete backup copies, unlock files) in AutoCAD is one of the most important skills a user can develop.

AutoCAD file types

1. Whenever a drawing is saved in AutoCAD, it has the user-specified filename with a **.dwg** extension.

2. When a user edits a drawing and saves the changes, AutoCAD creates a file with the same filename, but with a **.bak** extension. The **.bak** file is the previously saved copy of the **.dwg** file with the same filename.

3. The user may find that AutoCAD creates a file with the same filename but with a **.dwk** extension assigned to it. This is a protected file called a locked file. If this file is attached to a drawing when the user tries to open the drawing, an error is produced. The user must unlock this file. The procedure for unlocking a drawing file is:
   a. Pick **File** pull-down, then pick **Management**, then pick **Utilities**. The File Utilities dialogue box pops up.
   b. Pick **Unlock file...** from the choice of buttons.
   c. Pick the drive, directory and filename of the file you wish to unlock. *Be sure to select the file with the* **.dwk** *extension! Pick* **OK**.

   The next time you attempt to open your drawing, there should be no lock error.

Opening drawings

Floppy disks should only be used as storage media. **Never open your drawing right from A:!!!** (AutoCAD needs a large amount of disk memory to open a drawing, and if AutoCAD doesn't find the memory, it stamps your drawing with a system error and is UNRECOVERABLE!!!)

File management using File Manager

Copying, deleting and **moving** files as well as **creating subdirectories** in the Windows environment is accomplished easily with the **File Manager** program.

File Manager is located in the **Main** window in Program Manager.

To access **File Manager** from Program Manager, do the following:

1. Double-click the **Main** window icon to open the group window.
2. Double-click the **File Manager** icon to start the program.

Notice that the screen is split into two parts: the left and right.

1. The **left side** of the screen shows the **directory tree**, which is a display of the directories and files on the current disk.
2. The **right side** of the screen displays all of the **files** in the current directory.

Now that File Manager is running, a variety of tasks can be accomplished with just a few clicks of the mouse. File Manager is used to list files on a disk, to copy files from the C: drive to floppies for backup storage, for deleting files from a disk and occasionally for creating subdirectories on disks for better file organization.

Listing files

To **list** files on a different disk or directory is the same as performing the **DIR** command in DOS.

1. **Click** the desired disk drive from those available on the third menu bar from the top. If you want to read drive A:, be sure there is a floppy in the drive before clicking the icon.
2. If you want to see the files in a certain directory, **click** that directory from the tree on the left-hand side of the screen.
3. To see all of the file details (date last edited, time last edited, size, etc.):
   a. **Click** the **View** pull-down
   b. **Click All File Details**

Copying files

To copy a file in Windows requires the same general formula as in DOS; you need to specify the current location and filename and the destination location and filename. The steps are as follows:

1. **Click** the file on the right side of the screen so it highlights.
2. Tell File Manager that you want to copy this file. **Click** the **File** pull-down, then pick the **Copy**... command.
3. The Copy dialogue box pops up. At the top, the current path is listed. In the **From** text box is the filename and extension. You don't need to make changes to the information in this text box.
4. File Manager is waiting for you to type in a new path and filename in the **To** text box. **Type the new path** (drive name with colon followed by \ and the name of a directory if desired) and the **filename with the extension**. You may change the filename now, but be sure to include the extension.
5. Click **OK**.

Deleting files

To **delete** a file from a disk:

1. **Click** the **drive** and **directory** of the file you wish to delete from the left side of the screen.
2. **Click** the filename so it highlights on the right side of the screen.
3. **Click File** pull-down and then **Delete**... . The **Delete** dialogue box pops up.
4. If the file you want to delete is listed, click **OK**. If not, click **Cancel**.
5. File Manager will ask for a **confirm** of the delete. If you really want to delete the file, click **Yes**. If not, click **Cancel**.

LSR-H1-LE
Discuss and Understand PC Basics
Attachment 3: **MASTER** Laboratory Exercise

Successful completion of this technical module will be based on the students' successful completion of the following components:

1. Discuss and understand the hardware and software basics of the AutoCAD system;
2. Discuss and understand DOS and windows operating systems;
3. Discuss and understand directory structure; and,
4. Manipulate and manage files.

LASER MACHINING SERIES

MASTER Technical Module No. LSR-H2

Subject: **Laser Machining** **Time: 5 Hrs.**

Duty: **Perform Computer-Aided Drafting (CAD)**
Task: Discuss CAD Basics and File Management

Note: AutoCAD® is being used as a typical CAD system

Objective(s):

Upon completion of this unit the student will be able to:
a. Save files in CAD (SAVE, SAVE AS, AUTOSAVE);
b. Study drawing editor, menu structure;
c. Perform basic DRAW commands (LINE, CIRCLE);
d. Study how to enter new points (Coordinate entry); and,
e. Perform basic EDIT command (ERASE).

Note: AutoCAD commands are in caps.

Instructional Materials:

AutoCAD software: Release 13 (DOS or Windows) preferred but, minimum, Release 12
486 DX2 or Pentium computer (IBM compatible) with SVGA monitor
MASTER Handout (LSR-H2-HO1)
MASTER Handout (LSR-H2-HO2) (Drawing Management Techniques; Saving Files)
MASTER Handout (LSR-H2-HO3) (Getting Acquainted with AutoCAD)
MASTER Laboratory Exercise (LSR-H2-LE)

References:

AutoCAD and its Applications; Release 13 for DOS, Shumaker, Terence and Madsen, David, Goodheart-Willcox Publishing, Latest Edition
Discovery AutoCAD R12, Dix, Mark & Riley, Paul, Prentice Hall Publishing, Latest Edition
Inside AutoCAD Release 13c4, Pitzer, David, Soen, Francis, Fulmer, Howard, et al., New Riders Publishing, Latest Edition
Technical Drawing, Giesecke, Frederick, et al., Macmillan Publishing, Latest Edition

Student Preparation:

Students should have previously completed the following Technical Modules:

LSR-B1 through LSR-B9 "Apply Mathematical Concepts"
LSR-H1 "Discuss and Understand PC Basics"

Introduction:

The objective of Computer Aided Drafting (CAD) is to apply computer technology in the creation and communication of designs. Engineering drawings are an integral part of industry. The drawings or, in a CAD system, the data base, serves as the link between design and manufacturing. Computer technology provides the means of rapidly communicating drawings (created with respect to engineering standards) to manufacturing using a common database. CAD has replaced manual board drafting. CAD has not replaced the concepts and principles used when drafting was performed manually. CAD has, however, improved the productivity of the design/drafting process by automating repetitive tasks. In addition, the overall accuracy of models has improved significantly as a computer system is capable of accuracy of millionths and higher. Students studying this technology will become familiar with the terminology, capabilities, and operation of computer aided drafting software using AutoCAD as a typical CAD program. In this module, the student will be introduced to the AutoCAD drawing editor and menu structure. Beginning commands such as saving and line drawing will be covered. In addition, the student will be introduced to editing in CAD.

Presentation Outline:

I. Discuss CAD Basics and File Management
   - A. Save files in CAD (SAVE, SAVE AS, AUTOSAVE)
   - B. Study drawing editor, menu structure
   - C. Perform basic DRAW commands (LINE, CIRCLE)
   - D. Study how to enter new points (Coordinate entry)
   - E. Perform basic EDIT command (ERASE)

Practical Application:

Students will observe and participate in the discussion of the topics listed above.

Evaluation and/or Verification:

Successful completion of this technical module will be based on the students' successful completion of the following components:

1. Using the Save commands in AutoCAD (SAVE, SAVE AS, AUTOSAVE);
2. Understanding and discussing the drawing editor and menu structure;

3. Perform basic DRAW commands (LINE, CIRCLE);
4. Understand and use Coordinate entry to create points for lines and circles; and,
5. Use the most basic EDIT command (ERASE).

Summary:

Review the main lesson points using the suggested text(s) listed in the reference section of this module. Hold class discussion and answer student questions.

Next Lesson Assignment:

MASTER Technical Module (LSR-H3) pertaining to the use of drawing settings.

LSR-H2-HO1
Discuss CAD Basics and File Management
Attachment 1: **MASTER** Handout No. 1

Objective(s):

Upon completion of this unit the student will be able to:

a. Save files in CAD (SAVE, SAVE AS, AUTOSAVE);
b. Study drawing editor, menu structure;
c. Perform basic DRAW commands (LINE, CIRCLE);
d. Study how to enter new points (Coordinate entry); and,
e. Perform basic EDIT command (ERASE).

Note: AutoCAD commands are in caps.

Module Outline:

I. Discuss CAD Basics and File Management
   A. Save files in CAD (SAVE, SAVE AS, AUTOSAVE)
   B. Study drawing editor, menu structure
   C. Perform basic DRAW commands (LINE, CIRCLE)
   D. Study how to enter new points (Coordinate entry)
   E. Perform basic EDIT command (ERASE)

Drawing Management Techniques; Saving Files

The windows discussion provides a good segue to present proper file management techniques. The **Save...** and **Save As...** commands in AutoCAD can be very tricky for new users to grasp, especially if the lab is using a network copy of AutoCAD. To avoid locking of files, we have set up a **TEMP** subdirectory on each computer C: hard drive and issue the following mandate:

OPENING DRAWINGS

ALWAYS OPEN AN AUTOCAD DRAWING FROM THE HARD DRIVE (C:\TEMP).* Never open a drawing from the A: drive. (Floppies should be used as storage media only.)

*If a file is not on the hard drive, use File Manager to copy the file from the floppy to the hard drive.

SAVING DRAWINGS

SAVE WORK OFTEN AND ALWAYS TO THE COMPUTER HARD DRIVE (C:\TEMP). Never save an open AutoCAD drawing directly to the floppy disk.**

**Use File Manager to copy files from the hard drive to both floppies. Yes, two floppies. Each should contain the most recent version of the drawing.

By forcing students to open drawings from the hard drive, the working directory is the hard drive. AutoCAD runs faster because it looks to the fast-spinning hard drive rather than the slow-spinning floppy when it needs to reference the disk.

Students discover very early on in the course that it is possible to open drawings from the floppy disk. Most AutoCAD books address opening drawings directly from the floppy. The problem students encounter with opening drawings from the floppy is that AutoCAD needs at least 300,000 bytes of memory to open the drawing, even for the smallest of drawings. If the floppy is full, AutoCAD stamps the drawing with a system error, rendering it unrecoverable. If the student was using proper file management techniques, that's not a problem. The student has another copy of that drawing on his/her other disk. Hopefully, students will get the message that floppies are cheap - time is very "expensive"!

Students also learn that it is possible to save drawings to the floppy within AutoCAD. The problem with saving an open AutoCAD drawing directly to the floppy is that the floppy is now the last referenced disk. Often students will swap floppies to save the drawing to a backup disk. The first floppy's drawing is now left "open." It is locked. While the drawing can be unlocked easily using **File Utilities**, students feel very frustrated by locked drawings. Students who insist on saving drawings directly to the floppy need to pay close attention to the location of the last reference.

Getting Acquainted with AutoCAD

Start AutoCAD

1. Introduce the layout of the graphics window - title bar, toolbars, screen menu, command lines, pull-down menus, graphics area, UCS icon.
2. Emphasize that like AutoCAD commands are grouped together in pull-down menus or toolbars (i.e., commands for drawing objects are found on the Draw toolbar).
3. Discuss keys, buttons, functions and terminology.
4. Review the actions of a two button mouse:
   a. Left = "click" (activates a command from pull-down or toolbar, picks a point on the screen)
   b. Right = "enter" (same as Enter on keyboard)
   c. Double-click left = "open" (seldom used in AutoCAD)
4. Discuss similarities with other Windows-based applications in terms of object behaviors. For example, pull-down menus work the same way, whether the application is AutoCAD or Word. Pull-down menus are all activated with a pick of the menu title. To close a menu without picking a command, the user picks the menu title or anywhere not on the menu itself. Other examples: windows (and toolbars) may be moved by pick+hold on the window title; windows may be resized by sliding the pointer to the border of the window and using the two-sided arrow to change size.

In this session, it is not important that students know how to use AutoCAD commands. The goal of this session is to liken the AutoCAD graphics window tools to the manual drafter's tools.

Manual Drafting	Computer-Aided Drafting
Desktop	Graphics area
Paper	**LIMITS** command, displays as grid
Eraser	**ERASE** command, other **Modify** commands
Pencil	**Draw** commands
T-square, etc.	**Ortho** mode toggle key

Successful completion of this technical module will be based on the students' successful completion of the following components:

1. Using the Save commands in AutoCAD (SAVE, SAVE AS, AUTOSAVE);
2. Understanding and discussing the drawing editor and menu structure;
3. Perform basic DRAW commands (LINE, CIRCLE);
4. Understand and use Coordinate entry to create points for lines and circles; and,
5. Use the most basic EDIT command (ERASE).

LASER MACHINING SERIES

MASTER Technical Module No. LSR-H3

Subject: Laser Machining **Time:** 5 Hrs.

Duty: Perform Computer-Aided Drafting (CAD)
Task: Use Drawing Settings

Note: AutoCAD® is being used as a typical CAD system

Objective(s):

Upon completion of this unit the student will be able to:

a. Perform drawing sheet set-up using LIMITS;
b. Establish the drawing UNITS;
c. Set up a GRID;
d. Use ORTHO to create horizontal and vertical cursor movements;
e. Use SNAP to move from fixed point to fixed point;
f. Set up drawing aids using DDRMODES; and,
g. Discuss ANSI sheet sizes and apply as prototype drawings.

Note: AutoCAD commands are in caps.

Instructional Materials:

AutoCAD software: Release 13 (DOS or Windows) preferred but, minimum, Release 12
486 DX2 or Pentium computer (IBM compatible) with SVGA monitor
Prototype drawings for A and B size per LSR-H3-HO2
MASTER Handout (LSR-H3-HO1)
MASTER Handout (LSR-H3-HO2) (Create ASIZE.DWG and BSIZE.DWG Prototypes)
MASTER Handout (LSR-H3-HO3) (Introduction to Drawing Aids)
MASTER Handout (LSR-H3-HO4) (Using a Prototype Drawing)
MASTER Laboratory Exercise (LSR-H3-LE)

References:

AutoCAD and its Applications; Release 13 for DOS, Shumaker, Terence and Madsen, David, Goodheart-Willcox Publishing, Latest Edition
Discovery AutoCAD R12, Dix, Mark & Riley, Paul, Prentice Hall Publishing, Latest Edition

Inside AutoCAD Release 13c4, Pitzer, David, Soen, Francis, Fulmer, Howard, et al., New Riders Publishing, Latest Edition
Technical Drawing, Giesecke, Frederick, et al., Macmillan Publishing, Latest Edition

Student Preparation:

Students should have previously completed the following Technical Modules:
LSR-H2 "Discuss CAD Basics and File Management"

Introduction:

The objective of Computer Aided Drafting (CAD) is to apply computer technology in the creation and communication of designs. Engineering drawings are an integral part of industry. The drawings or, in a CAD system, the data base, serves as the link between design and manufacturing. Computer technology provides the means of rapidly communicating drawings (created with respect to engineering standards) to manufacturing using a common database. CAD has replaced manual board drafting. CAD has not replaced the concepts and principles used when drafting was performed manually. CAD has, however, improved the productivity of the design/drafting process by automating repetitive tasks. In addition, the overall accuracy of models has improved significantly as a computer system is capable of accuracy of millionths and higher. Students studying this technology will become familiar with the terminology, capabilities, and operation of computer aided drafting software using AutoCAD as a typical CAD program. In this module, the student will learn how to set up a basic AutoCAD drawing. The movement of the cursor will be studied including how to establish fixed movements. In addition, the ANSI standard for sheet sizes will be discussed followed by the use of these standard sizes for prototype drawings.

Presentation Outline:

I. Use Drawing Settings
   A. Perform drawing sheet set-up using LIMITS
   B. Establish the drawing UNITS
   C. Set up a GRID
   D. Use ORTHO to create horizontal and vertical cursor movements
   E. Use SNAP to move from fixed point to fixed point
   F. Set up drawing aids using DDRMODES
   G. Discuss ANSI sheet sizes and apply as prototype drawings

Practical Application:

Students will observe and participate in the discussion of the topics listed above. Following the demonstrations, students will complete drawings assigned by the instructor using the A size prototype.

Evaluation and/or Verification:

Successful completion of this technical module will be based on the students' successful completion of the following components:

a. Create the drawing sheet size by using LIMITS;
b. Establish the drawing UNITS;
c. Discuss the use of, and set up a GRID;
d. Use ORTHO to create horizontal and vertical cursor movements;
e. Use SNAP to move from fixed point to fixed point;
f. Set up drawing aids using DDRMODES; and,
g. Understand and use an ANSI prototype drawing.

Summary:

Review the main lesson points using the suggested text(s) listed in the reference section of this module. Hold class discussion and answer student questions.

Next Lesson Assignment:

MASTER Technical Module (LSR-H4) pertaining to performing basic editing commands.

LSR-H3-HO1
Use Drawing Settings
Attachment 1: **MASTER** Handout No. 1

Objective(s):

Upon completion of this unit the student will be able to:

a. Perform drawing sheet set-up using LIMITS;
b. Establish the drawing UNITS;
c. Set up a GRID;
d. Use ORTHO to create horizontal and vertical cursor movements;
e. Use SNAP to move from fixed point to fixed point;
f. Set up drawing aids using DDRMODES; and,
g. Discuss ANSI sheet sizes and apply as prototype drawings.

Note: AutoCAD commands are in caps.

Module Outline:

I. Use Drawing Settings
   A. Perform drawing sheet set-up using LIMITS
   B. Establish the drawing UNITS
   C. Set up a GRID
   D. Use ORTHO to create horizontal and vertical cursor movements
   E. Use SNAP to move from fixed point to fixed point
   F. Set up drawing aids using DDRMODES
   G. Discuss ANSI sheet sizes and apply as prototype drawings

Create ASIZE.DWG and BSIZE.DWG Prototypes

Create two AutoCAD drawing files in accordance with ANSI standards for sheet sizes. The ASIZE.DWG file has the border and title block for the A size sheet. Create the title block as a block with attributes. Layer 0 only. The BSIZE.DWG file should contain the border and title block for a B size sheet. Create the title block as a block with attributes. Layer 0 only. Save these files to a network drive or make available on floppy disk so students may have access to them for new drawing setup.

Standard Sheet Sizes

Discuss good engineering drawing setup.

- Sheet sizes A through E
- Border sizes
- Title block sizes

Explain that A size and B size drawings have been created for students to use, complete with correct sheet size, border and title block. The filenames are ASIZE.DWG and BSIZE.DWG. The instructor should copy these drawings into a directory where students have access rights. A subdirectory on a network drive would be ideal.

Introduction to Drawing Aids

The aids which help the user control the mouse, layout the drawing and ensure accuracy are referred to as drawing aids. They are **GRID**, **SNAP** and **ORTHO**.

Establishing a Grid on the Screen

The grid is a pattern of dots which helps the user define the paper and layout the drawing. Key points:

- Grid visible only on screen - does not plot
- **F7 key** toggles grid **On/Off**
- Changing grid spacing

Setting Increments for Cursor Movement

The snap grid controls cursor movement. Emphasize the snap grid controls cursor movement, but that grid is only a visual aid. Key points:

- Setting the snap increment with **SNAP** command
- Setting grid spacing relative to snap spacing
- **F9** key toggles grid **On/Off**

Using the Pull-Down Menu to Set Drawing Aids

The aforementioned drawing aides may be accessed through a graphical user interface called the **Drawing Aids** dialog box. Key points:

- Accessing the **Drawing Aids** dialog box (**DDRMODES**)

Note: It is important to realize that **SNAP** is a rudimentary command and that its use should be discouraged once object snaps and the three point entry methods are introduced.

Using a Prototype Drawing

To start a new drawing using the ASIZE.DWG prototype

1. Pick **File** pull-down menu
2. Pick **New...**
3. Pick the **Prototype...** button in the **Create New Drawing** dialog box. Use the ASIZE.DWG prototype from the appropriate directory.
4. Name the drawing as appropriate.
5. Pick **OK** to close the dialog box.

Editing the Title Block

The title block for each drawing should be filled in with as much information as is known. At the very least, the initials of the person who created the drawing, the date, the scale of the drawing and the drawing title should be included. *Use uppercase text.*

The **DDATTE** command must be used to place text in the title block. The title block was created with special properties which facilitate the process of placing in the title block. These special text properties are called attributes, and will be covered at a later date.

Using the **DDATTE** command:

1. Type **DDATTE** at the **Command:** prompt
2. Pick any piece or text or line on the title block
3. Hit **Enter**. The **Edit Attributes** dialog box appears.
4. Move the cursor to the text box, pick in the box and type in appropriate text.
5. Pick **OK** when finished. If **Cancel** is picked, no changes are made.

LSR-H3-LE
Use Drawing Settings
Attachment 5: **MASTER** Laboratory Exercise

Successful completion of this technical module will be based on the students' successful completion of the following components:

a. Create the drawing sheet size by using LIMITS;
b. Establish the drawing UNITS;
c. Discuss the use of, and set up a GRID;
d. Use ORTHO to create horizontal and vertical cursor movements;
e. Use SNAP to move from fixed point to fixed point;
f. Set up drawing aids using DDRMODES; and,
g. Understand and use an ANSI prototype drawing.

LASER MACHINING SERIES

MASTER Technical Module No. LSR-H4

Subject: Laser Machining **Time:** 5 Hrs.

Duty: Perform Computer-Aided Drafting (CAD)
Task: Perform Basic Editing Commands

Note: AutoCAD® is being used as a typical CAD system

Objective(s):

Upon completion of this unit the student will be able to:

a. Discuss how to group objects for editing using:
   (1) Window;
   (2) Crossing Window;
   (3) Remove and Add;
   (4) Last and Previous;
   (5) Fence;

b. Perform modifications and changes to objects on screen using:
   (1) COPY;
   (2) MOVE;
   (3) FILLET; and,
   (4) CHAMFER.

Note: AutoCAD commands are in caps.

Instructional Materials:

AutoCAD software: Release 13 (DOS or Windows) preferred but, minimum, Release 12
486 DX2 or Pentium computer (IBM compatible) with SVGA monitor
Prototype drawings for A and B size per LSR-H3-HO2
MASTER Handout (LSR-H4-HO)
MASTER Laboratory Exercise (LSR-H4-LE)

References:

AutoCAD and its Applications; Release 13 for DOS, Shumaker, Terence and Madsen, David, Goodheart-Willcox Publishing, Latest Edition
Discovery AutoCAD R12, Dix, Mark & Riley, Paul, Prentice Hall Publishing, Latest Edition

Inside AutoCAD Release 13c4, Pitzer, David, Soen, Francis, Fulmer, Howard, et al., New Riders Publishing, Latest Edition
Technical Drawing, Giesecke, Frederick, et al., Macmillan Publishing, Latest Edition

Student Preparation:

Students should have previously completed the following Technical Modules:
LSR-H3 "Use Drawing Settings"

Introduction:

The objective of Computer Aided Drafting (CAD) is to apply computer technology in the creation and communication of designs. Engineering drawings are an integral part of industry. The drawings or, in a CAD system, the data base, serves as the link between design and manufacturing. Computer technology provides the means of rapidly communicating drawings (created with respect to engineering standards) to manufacturing using a common database. CAD has replaced manual board drafting. CAD has not replaced the concepts and principles used when drafting was performed manually. CAD has, however, improved the productivity of the design/drafting process by automating repetitive tasks. In addition, the overall accuracy of models has improved significantly as a computer system is capable of accuracy of millionths and higher. Students studying this technology will become familiar with the terminology, capabilities, and operation of computer aided drafting software using AutoCAD as a typical CAD program. In this module, the student will learn how to use basic editing commands in an AutoCAD drawing. Drafting using a computer, makes the task of editing objects in a drawing quicker and easier when compared to manual drafting. The benefit of CAD is "draw it once, copy it forever." In order to take full advantage of AutoCAD's basic editing commands, the methods for selecting, or grouping, objects will be studied first.

Presentation Outline:

I. Perform Basic Editing Commands
   A. Discuss how to group objects for editing
      1. Window
      2. Crossing Window
      3. Remove and Add
      4. Last and Previous
      5. Fence
   B. Perform modifications and changes to objects on screen using:
      1. COPY
      2. MOVE
      3. FILLET

4. CHAMFER

Practical Application:

Students will observe and participate in the discussion of the topics listed above. Following the demonstrations, students will complete drawings assigned by the instructor using the A size prototype.

Evaluation and/or Verification:

Successful completion of this technical module will be based on the students' successful completion of the following components:

a. Select objects on the screen using the options of:
   (1) Window;
   (2) Crossing Window;
   (3) Remove and Add;
   (4) Last and Previous;
   (5) Fence;

b. Create and modify objects on screen using:
   (1) COPY;
   (2) MOVE;
   (3) FILLET; and,
   (4) CHAMFER.

Summary:

Review the main lesson points using the suggested text(s) listed in the reference section of this module. Hold class discussion and answer student questions.

Next Lesson Assignment:

MASTER Technical Module (LSR-H5) pertaining to creating drawings with accuracy.

LSR-H4-HO
Perform Basic Editing Commands
Attachment 1: **MASTER** Handout

Objective(s):

Upon completion of this unit the student will be able to:

a. Discuss how to group objects for editing using:
   (1) Window;
   (2) Crossing Window;
   (3) Remove and Add;
   (4) Last and Previous;
   (5) Fence;

b. Perform modifications and changes to objects on screen using:
   (1) COPY;
   (2) MOVE;
   (3) FILLET; and,
   (4) CHAMFER.

Note: AutoCAD commands are in caps.

Module Outline:

I. Perform Basic Editing Commands
   A. Discuss how to group objects for editing
      1. Window
      2. Crossing Window
      3. Remove and Add
      4. Last and Previous
      5. Fence
   B. Perform modifications and changes to objects on screen using:
      1. COPY
      2. MOVE
      3. FILLET
      4. CHAMFER

Successful completion of this technical module will be based on the students' successful completion of the following components:

a. Select objects on the screen using the options of:
   (1) Window;
   (2) Crossing Window;
   (3) Remove and Add;
   (4) Last and Previous;
   (5) Fence;

b. Create and modify objects on screen using:
   (1) COPY;
   (2) MOVE;
   (3) FILLET; and,
   (4) CHAMFER.

LASER MACHINING SERIES

MASTER Technical Module No. LSR-H5

Subject: Laser Machining **Time:** 3 Hrs.

Duty: Perform Computer-Aided Drafting (CAD)
Task: Create Drawings with Accuracy

Note: AutoCAD® is being used as a typical CAD system

Objective(s):

Upon completion of this unit the student will be able to:
a. Draw with object snap enabled (OSNAP and DDOSNAP);
b. Determine the accuracy of a drawing using:
   (1) DIST;
   (2) LIST; and,
   (3) ID.

Note: AutoCAD commands are in caps.

Instructional Materials:

AutoCAD software: Release 13 (DOS or Windows) preferred but, minimum, Release 12
486 DX2 or Pentium computer (IBM compatible) with SVGA monitor
Prototype drawings for A and B size per LSR-H3-HO2
MASTER Handout (LSR-H5-HO)
MASTER Laboratory Exercise (LSR-H5-LE)

References:

AutoCAD and its Applications; Release 13 for DOS, Shumaker, Terence and Madsen, David, Goodheart-Willcox Publishing, Latest Edition
Discovery AutoCAD R12, Dix, Mark & Riley, Paul, Prentice Hall Publishing, Latest Edition
Inside AutoCAD Release 13c4, Pitzer, David, Soen, Francis, Fulmer, Howard, et al., New Riders Publishing, Latest Edition

Student Preparation:

Students should have previously completed the following Technical Modules:
LSR-H4 "Perform Basic Editing Commands"

Introduction:

The objective of Computer Aided Drafting (CAD) is to apply computer technology in the creation and communication of designs. Engineering drawings are an integral part of industry. The drawings or, in a CAD system, the data base, serves as the link between design and manufacturing. Computer technology provides the means of rapidly communicating drawings (created with respect to engineering standards) to manufacturing using a common database. CAD has replaced manual board drafting. CAD has not replaced the concepts and principles used when drafting was performed manually. CAD has, however, improved the productivity of the design/drafting process by automating repetitive tasks. In addition, the overall accuracy of models has improved significantly as a computer system is capable of accuracy of millionths and higher. Students studying this technology will become familiar with the terminology, capabilities, and operation of computer aided drafting software using AutoCAD as a typical CAD program. In this module, the student will learn how to create drawings with accuracy using AutoCAD's object snap command (OSNAP). This option allows the user to place points exactly at, for example, the endpoint or midpoint of a line or to a circle's center. In all, there are eleven (11) possible object snap modes within AutoCAD. Once drawn, the user may obtain information about a drawing by using one of AutoCAD's inquiry commands. Distance or data related to a point(s) or object(s) may be listed using one of these inquiry commands.

Presentation Outline:

I. Create Drawings with Accuracy
   - A. Draw with object snap enabled (OSNAP, DDOSNAP)
   - B. Determine the accuracy of a drawing using:
     1. DIST
     2. LIST
     3. ID

Practical Application:

Students will observe and participate in the discussion of the topics listed above. Following the demonstrations, students will complete drawings assigned by the instructor using the A size prototype.

Evaluation and/or Verification:

Successful completion of this technical module will be based on the students' successful completion of the following components:

a. Draw figures using all of the object snap modes;
b. Obtain data concerning a drawing using:

(1) DIST;
(2) LIST; and,
(3) ID.

Summary:

Review the main lesson points using the suggested text(s) listed in the reference section of this module. Hold class discussion and answer student questions.

Next Lesson Assignment:

MASTER Technical Module (LSR-H6) pertaining to organizing drawing information.

LSR-H5-HO
Create Drawings with Accuracy
Attachment 1: **MASTER** Handout

Objective(s):

Upon completion of this unit the student will be able to:

a. Draw with object snap enabled (OSNAP and DDOSNAP);
b. Determine the accuracy of a drawing using:
   (1) DIST;
   (2) LIST; and,
   (3) ID.

Note: AutoCAD commands are in caps.

Module Outline:

I. Create Drawings with Accuracy
   A. Draw with object snap enabled (OSNAP, DDOSNAP)
   B. Determine the accuracy of a drawing using:
      1. DIST
      2. LIST
      3. ID

Successful completion of this technical module will be based on the students' successful completion of the following components:

a. Draw figures using all of the object snap modes;
b. Obtain data concerning a drawing using:
   (1) DIST;
   (2) LIST; and,
   (3) ID.

LASER MACHINING SERIES

MASTER Technical Module No. LSR-H6

Subject: Laser Machining **Time:** 5 Hrs.

Duty: Perform Computer-Aided Drafting (CAD)
Task: Organize Drawing Information

Note: AutoCAD® is being used as a typical CAD system

Objective(s):

Upon completion of this unit the student will be able to:

a. Perform layer creation (LAYER, DDLMODES);
b. Study and identify line styles;
c. Load and use linetypes;
   (1) LINETYPE;
   (2) LTSCALE;
d. Change properties of objects;
   (1) CHANGE;
   (2) CHPROP; and,
   (3) DDMODIFY.

Note: AutoCAD commands are in caps.

Instructional Materials:

AutoCAD software: Release 13 (DOS or Windows) preferred but, minimum, Release 12
486 DX2 or Pentium computer (IBM compatible) with SVGA monitor
Prototype drawings for A and B size per LSR-H3-HO2
MASTER Handout (LSR-H6-HO)
MASTER Laboratory Exercise No. 1 (LSR-H6-LE1)
MASTER Laboratory Exercise No. 2 (LSR-H6-LE2)

References:

AutoCAD and its Applications; Release 13 for DOS, Shumaker, Terence and Madsen, David, Goodheart-Willcox Publishing, Latest Edition
Discovery AutoCAD R12, Dix, Mark & Riley, Paul, Prentice Hall Publishing, Latest Edition
Inside AutoCAD Release 13c4, Pitzer, David, Soen, Francis, Fulmer, Howard, et al., New Riders Publishing, Latest Edition

Student Preparation:

Students should have previously completed the following Technical Modules:
LSR-H5 "Create Drawings with Accuracy"

Introduction:

The objective of Computer Aided Drafting (CAD) is to apply computer technology in the creation and communication of designs. Engineering drawings are an integral part of industry. The drawings or, in a CAD system, the data base, serves as the link between design and manufacturing. Computer technology provides the means of rapidly communicating drawings (created with respect to engineering standards) to manufacturing using a common database. CAD has replaced manual board drafting. CAD has not replaced the concepts and principles used when drafting was performed manually. CAD has, however, improved the productivity of the design/drafting process by automating repetitive tasks. In addition, the overall accuracy of models has improved significantly as a computer system is capable of accuracy of millionths and higher. Students studying this technology will become familiar with the terminology, capabilities, and operation of computer aided drafting software using AutoCAD as a typical CAD program. In this module, the student will learn how to organize drawing information on layers including corresponding linetypes. It is good computerized drafting practice to separate objects onto different layers, just as the manual drafter would use overlay or pin register drafting to organize information on separate sheets. Each layer is assigned one color and linetype and all entities on the layer take on the color and linetype of that layer. The appearance of linetypes (i.e., the length of the dashes) may be controlled using the linetype scale command (**LTSCALE**). In addition, coverage includes the different commands which can be used to change the properties of an entity. For example, an object may be drawn on an incorrect layer. Rather that redrawing the object on the correct layer, the user may use the **DDCHPROP** command to edit the layer of the object.

Presentation Outline:

I. Organize Drawing Information
   - A. Perform layer creation (LAYER, DDLMODES)
   - B. Study and identify line styles
   - C. Load and use linetypes
     1. LINETYPE
     2. LTSCALE
   - D. Change properties of objects
     1. CHANGE
     2. CHPROP
     3. DDMODIFY

Practical Application:

Students will observe and participate in the discussion of the topics listed above. Following the demonstrations, students will:

a. Update the ASIZE.DWG prototype to include mechanical layers

b. Open the drawing and create layers assigned by the instructor. Assign the layers the following colors and linetypes:

LAYER	COLOR	LINETYPE
OBJ	yellow	continuous
HID	red	hidden
CEN	green	center
DIM	magenta	continuous
CONS	magenta	continuous
HAT	cyan	continuous
BOR	blue	continuous

c. Change the layer of all of the entities which make up the border and title block to BOR.

d. Save this drawing.
(This modified drawing will be used on all future drawings which call for an A size setup.)

e. Update the BSIZE.DWG prototype to include mechanical layers using the layer color and linetype scheme listed above.

f. Change the layer of the border and titleblock to BOR and save the drawing.
(This modified drawing will be used on all future drawings which call for the B size setup.)

Evaluation and/or Verification:

Successful completion of this technical module will be based on the students' successful completion of the following components:

a. Create and use layers;

b. Discuss and identify line styles;

c. Load linetypes and control their display;
   (1) LINETYPE;
   (2) LTSCALE;

d. Change the properties of objects on the screen;
   (1) CHANGE;
   (2) CHPROP; and,
   (3) DDMODIFY

Summary:

Review the main lesson points using the suggested text(s) listed in the reference section of this module. Hold class discussion and answer student questions.

Next Lesson Assignment:

MASTER Technical Module (LSR-H7) pertaining to controlling the display of drawings.

LSR-H6-HO
Organize Drawing Information
Attachment 1: **MASTER** Handout

Objective(s):

Upon completion of this unit the student will be able to:

a. Perform layer creation (LAYER, DDLMODES);
b. Study and identify line styles;
c. Load and use linetypes;
   (1) LINETYPE;
   (2) LTSCALE;
d. Change properties of objects;
   (1) CHANGE;
   (2) CHPROP; and,
   (3) DDMODIFY.

Note: AutoCAD commands are in caps.

Module Outline:

I. Organize Drawing Information
   A. Perform layer creation (LAYER, DDLMODES)
   B. Study and identify line styles
   C. Load and use linetypes
      1. LINETYPE
      2. LTSCALE
   D. Change properties of objects
      1. CHANGE
      2. CHPROP
      3. DDMODIFY

Successful completion of this technical module will be based on the students' successful completion of the following components:

a. Create and use layers;
b. Discuss and identify line styles;
c. Load linetypes and control their display;
   (1) LINETYPE;
   (2) LTSCALE;
d. Change the properties of objects on the screen;
   (1) CHANGE;
   (2) CHPROP; and,
   (3) DDMODIFY

Students will observe and participate in the discussion of the topics listed above. Following the demonstrations, students will:

a. Update the ASIZE.DWG prototype to include mechanical layers

b. Open the drawing and create layers assigned by the instructor. Assign the layers the following colors and linetypes:

LAYER	COLOR	LINETYPE
OBJ	yellow	continuous
HID	red	hidden
CEN	green	center
DIM	magenta	continuous
CONS	magenta	continuous
HAT	cyan	continuous
BOR	blue	continuous

c. Change the layer of all of the entities which make up the border and title block to **BOR**.

d. Save this drawing.
(This modified drawing will be used on all future drawings which call for an A size setup.)

e. Update the BSIZE.DWG prototype to include mechanical layers using the layer color and linetype scheme listed above.

f. Change the layer of the border and titleblock to BOR and save the drawing.
(This modified drawing will be used on all future drawings which call for the B size setup.)

LASER MACHINING SERIES

MASTER Technical Module No. LSR-H7

Subject: Laser Machining **Time:** 5 Hrs.

Duty: Perform Computer-Aided Drafting (CAD)
Task: Control the Display of Drawings

Note: AutoCAD® is being used as a typical CAD system

Objective(s):

Upon completion of this unit the student will be able to:

a. Change magnification of objects (ZOOM Window, Previous, All, Extents, Dynamic);
b. Move the display area (PAN);
c. Plot drawings to a printer (PLOT); and,
d. Plot drawings to a plotter (PLOT).

Note: AutoCAD commands are in caps.

Instructional Materials:

AutoCAD software: Release 13 (DOS or Windows) preferred but, minimum, Release 12
486 DX2 or Pentium computer (IBM compatible) with SVGA monitor
Prototype drawings for A and B size per LSR-H3-HO2
MASTER Handout (LSR-H7-HO)
MASTER Laboratory Exercise (LSR-H7-LE)

References:

AutoCAD and its Applications; Release 13 for DOS, Shumaker, Terence and Madsen, David, Goodheart-Willcox Publishing, Latest Edition
Discovery AutoCAD R12, Dix, Mark & Riley, Paul, Prentice Hall Publishing, Latest Edition
Inside AutoCAD Release 13c4, Pitzer, David, Soen, Francis, Fulmer, Howard, et al., New Riders Publishing, Latest Edition

Student Preparation:

Students should have previously completed the following Technical Modules:
LSR-H6 "Organize Drawing Information"

Introduction:

The objective of Computer Aided Drafting (CAD) is to apply computer technology in the creation and communication of designs. Engineering drawings are an integral part of industry. The drawings or, in a CAD system, the data base, serves as the link between design and manufacturing. Computer technology provides the means of rapidly communicating drawings (created with respect to engineering standards) to manufacturing using a common database. CAD has replaced manual board drafting. CAD has not replaced the concepts and principles used when drafting was performed manually. CAD has, however, improved the productivity of the design/drafting process by automating repetitive tasks. In addition, the overall accuracy of models has improved significantly as a computer system is capable of accuracy of millionths and higher. Students studying this technology will become familiar with the terminology, capabilities, and operation of computer aided drafting software using AutoCAD as a typical CAD program. In this module, the student will learn how to magnify and control the display of the drawing. In addition, the student will become familiar with the steps of plotting and printing their drawings.

Presentation Outline:

I. Control the Display of Drawings
   - A. Change magnification of objects (ZOOM Window, Previous, All, Extents, Dynamic)
   - B. Move the display area (PAN)
   - C. Plot drawings to a printer (PLOT)
   - D. Plot drawings to a plotter (PLOT)

Practical Application:

Students will observe and participate in the discussion of the topics listed above. Following the demonstrations, students will apply these commands to all future drawing assignments.

Evaluation and/or Verification:

Successful completion of this technical module will be based on the students' successful completion of the following components:

a. Discuss and use ZOOM with Window, Previous, All, Extents, Dynamic, etc. to change the magnification of objects;
b. Discuss and use PAN to move the display area; and,
c. Discuss the setup and requirements necessary to plot drawings to a printer or plotter (PLOT).

Summary:

Review the main lesson points using the suggested text(s) listed in the reference section of this module. Hold class discussion and answer student questions.

Next Lesson Assignment:

MASTER Technical Module (LSR-H8) pertaining to using intermediate drawing commands.

LSR-H7-HO
Control the Display of Drawings
Attachment 1: **MASTER** Handout

Objective(s):

Upon completion of this unit the student will be able to:

a. Change magnification of objects (ZOOM Window, Previous, All, Extents, Dynamic);
b. Move the display area (PAN);
c. Plot drawings to a printer (PLOT); and,
d. Plot drawings to a plotter (PLOT).

Note: AutoCAD commands are in caps.

Module Outline:

I. Control the Display of Drawings
   A. Change magnification of objects (ZOOM Window, Previous, All, Extents, Dynamic)
   B. Move the display area (PAN)
   C. Plot drawings to a printer (PLOT)
   D. Plot drawings to a plotter (PLOT)

LSR-H7-LE
Control the Display of Drawings
Attachment 2: **MASTER** Laboratory Exercise

Successful completion of this technical module will be based on the students' successful completion of the following components:

a. Discuss and use ZOOM with Window, Previous, All, Extents, Dynamic, etc. to change the magnification of objects;
b. Discuss and use PAN to move the display area; and,
c. Discuss the setup and requirements necessary to plot drawings to a printer or plotter (PLOT).

LASER MACHINING SERIES

MASTER Technical Module No. LSR-H8

Subject: Laser Machining **Time:** 5 Hrs.

Duty: Perform Computer-Aided Drafting (CAD)
Task: Use Intermediate Drawing Commands

Note: AutoCAD® is being used as a typical CAD system

Objective(s):

Upon completion of this unit the student will be able to:

a. Make parallel copies of objects (OFFSET);
b. Make multiple copies of objects (Multiple COPY, Rectangular and Polar ARRAY);
c. Create arcs (ARC);
d. Create text on the drawing (TEXT, DTEXT, STYLE);
e. Create center marks and center lines (DIM, CENTER);
f. Draw an ellipse (ELLIPSE); and,
g. Draw polygons (POLYGON & RECTANGLE).

Note: AutoCAD commands are in caps.

Instructional Materials:

AutoCAD software: Release 13 (DOS or Windows) preferred but, minimum, Release 12
486 DX2 or Pentium computer (IBM compatible) with SVGA monitor
Prototype drawings for A and B size per LSR-H3-HO2
MASTER Handout (LSR-H8-HO)
MASTER Laboratory Exercise No. 1(LSR-H8-LE1)
MASTER Laboratory Exercise No. 2 (LSR-H8-LE2)

References:

AutoCAD and its Applications; Release 13 for DOS, Shumaker, Terence and Madsen, David, Goodheart-Willcox Publishing, Latest Edition
Discovery AutoCAD R12, Dix, Mark & Riley, Paul, Prentice Hall Publishing, Latest Edition
Inside AutoCAD Release 13c4, Pitzer, David, Soen, Francis, Fulmer, Howard, et al., New Riders Publishing, Latest Edition

Technical Drawing, Giesecke, Frederick, et al., Macmillan Publishing, Latest Edition

Student Preparation:

Students should have previously completed the following Technical Modules:
LSR-H7 "Control the Display of Drawings"

Introduction:

The objective of Computer Aided Drafting (CAD) is to apply computer technology in the creation and communication of designs. Engineering drawings are an integral part of industry. The drawings or, in a CAD system, the data base, serves as the link between design and manufacturing. Computer technology provides the means of rapidly communicating drawings (created with respect to engineering standards) to manufacturing using a common database. CAD has replaced manual board drafting. CAD has not replaced the concepts and principles used when drafting was performed manually. CAD has, however, improved the productivity of the design/drafting process by automating repetitive tasks. In addition, the overall accuracy of models has improved significantly as a computer system is capable of accuracy of millionths and higher. Students studying this technology will become familiar with the terminology, capabilities, and operation of computer aided drafting software using AutoCAD as a typical CAD program. In this module, the student will increase their knowledge of drawing commands. Constructive editing commands, such as OFFSET and ARRAY, are used to create parallel copies and multiple copies, respectively, from existing geometry. In addition, the student will continue the learning of the creation of basic shapes and forms. Intermediate drawing commands such as ARC, ELLIPSE, POLYGON, RECTANGLE and Centerlines will be covered. Finally, the student will learn the methods for placing text on a drawing including the selection of fonts.

Presentation Outline:

I. Use Intermediate Drawing Commands
   - A. Make parallel copies of objects (OFFSET)
   - B. Make multiple copies of objects
     1. Multiple COPY
     2. Rectangular and Polar ARRAY
   - C. Create arcs (ARC)
   - D. Create text on the drawing
     1. TEXT
     2. DTEXT
     3. STYLE
   - E. Create center marks and center lines (DIM, CENTER)
   - F. Draw an ellipse (ELLIPSE)

F. Draw polygons (POLYGON & RECTANGLE)

Practical Application:

Students will observe and participate in the discussion of the topics listed above. Following the demonstrations, students will complete the following lab work:

a. **Revise ASIZE.DWG and BSIZE.DWG prototype drawings to include ROMANS text style;**
(Open each drawing and create the text style. Be sure to save over the old copy of the drawing.)

b. **Create CSIZE.DWG and DSIZE.DWG;**
Use the settings assigned by the instructor to draw the border and title block for each prototype. Include layers, colors and linetypes as well as the ROMANS text style.

c. For all drawings, use the new A size prototype; and,

d. Create one hex nut; then use Rectangular Array to create the other three.

Evaluation and/or Verification:

Successful completion of this technical module will be based on the students' successful completion of the following components:

a. Make parallel copies of objects using OFFSET;

b. Make multiple copies of objects using Multiple COPY and Rectangular and Polar ARRAYs);

c. Create arcs using the ARC command;

d. Create text with an appropriate font using TEXT, DTEXT, and STYLE;

e. Create center marks and center lines using DIM and CENTER;

f. Draw an ellipse using ELLIPSE; and,

g. Draw polygons using the POLYGON & RECTANGLE commands.

Summary:

Review the main lesson points using the suggested text(s) listed in the reference section of this module. Hold class discussion and answer student questions.

Next Lesson Assignment:

MASTER Technical Module (LSR-H9) pertaining to performing intermediate editing commands.

LSR-H8-HO
Use Intermediate Drawing Commands
Attachment 1: **MASTER** Handout

Objective(s):

Upon completion of this unit the student will be able to:

a. Make parallel copies of objects (OFFSET);
b. Make multiple copies of objects (Multiple COPY, Rectangular and Polar ARRAY);
c. Create arcs (ARC);
d. Create text on the drawing (TEXT, DTEXT, STYLE);
e. Create center marks and center lines (DIM, CENTER);
f. Draw an ellipse (ELLIPSE); and,
g. Draw polygons (POLYGON & RECTANGLE).

Note: AutoCAD commands are in caps.

Module Outline:

I. Use Intermediate Drawing Commands
   A. Make parallel copies of objects (OFFSET)
   B. Make multiple copies of objects
      1. Multiple COPY
      2. Rectangular and Polar ARRAY
   C. Create arcs (ARC)
   D. Create text on the drawing
      1. TEXT
      2. DTEXT
      3. STYLE
   E. Create center marks and center lines (DIM, CENTER)
   F. Draw an ellipse (ELLIPSE)
   F. Draw polygons (POLYGON & RECTANGLE)

Successful completion of this technical module will be based on the students' successful completion of the following components:

a. Make parallel copies of objects using OFFSET;
b. Make multiple copies of objects using Multiple COPY and Rectangular and Polar ARRAYs);
c. Create arcs using the ARC command;
d. Create text with an appropriate font using TEXT, DTEXT, and STYLE;
e. Create center marks and center lines using DIM and CENTER;
f. Draw an ellipse using ELLIPSE; and,
g. Draw polygons using the POLYGON & RECTANGLE commands.

Students will observe and participate in the discussion of the topics listed above. Following the demonstrations, students will complete the following lab work:

a. **Revise ASIZE.DWG and BSIZE.DWG prototype drawings to include ROMANS text style;**
(Open each drawing and create the text style. Be sure to save over the old copy of the drawing.)

b. **Create CSIZE.DWG and DSIZE.DWG;**
Use the settings assigned by the instructor to draw the border and title block for each prototype. Include layers, colors and linetypes as well as the ROMANS text style.

c. For all drawings, use the new A size prototype; and,

d. Create one hex nut; then use Rectangular Array to create the other three.

LASER MACHINING SERIES

MASTER Technical Module No. LSR-H9

Subject: Laser Machining **Time:** 5 Hrs.

Duty: Perform Computer-Aided Drafting (CAD)
Task: Perform Intermediate Editing Commands

Note: AutoCAD® is being used as a typical CAD system

Objective(s):

Upon completion of this unit the student will be able to:

a. Mirror objects (MIRROR);
b. Rotate objects (ROTATE);
c. Scale objects (SCALE);
d. Change the length of existing objects;
   (1) STRETCH;
   (2) EXTEND;
   (3) TRIM;
   (4) BREAK;
e. Edit text (DDEDIT); and,
f. Perform automatic editing using the noun-verb format (GRIPS).

Note: AutoCAD commands are in caps.

Instructional Materials:

AutoCAD software: Release 13 (DOS or Windows) preferred but, minimum, Release 12
486 DX2 or Pentium computer (IBM compatible) with SVGA monitor
Prototype drawings for A and B size per LSR-H3-HO2
MASTER Handout (LSR-H9-HO)
MASTER Laboratory Exercise (LSR-H9-LE)

References:

AutoCAD and its Applications; Release 13 for DOS, Shumaker, Terence and Madsen, David, Goodheart-Willcox Publishing, Latest Edition
Discovery AutoCAD R12, Dix, Mark & Riley, Paul, Prentice Hall Publishing, Latest Edition
Inside AutoCAD Release 13c4, Pitzer, David, Soen, Francis, Fulmer, Howard, et al., New Riders Publishing, Latest Edition

Student Preparation:

Students should have previously completed the following Technical Modules:
LSR-H8 "Use Intermediate Drawing Commands"

Introduction:

The objective of Computer Aided Drafting (CAD) is to apply computer technology in the creation and communication of designs. Engineering drawings are an integral part of industry. The drawings or, in a CAD system, the data base, serves as the link between design and manufacturing. Computer technology provides the means of rapidly communicating drawings (created with respect to engineering standards) to manufacturing using a common database. CAD has replaced manual board drafting. CAD has not replaced the concepts and principles used when drafting was performed manually. CAD has, however, improved the productivity of the design/drafting process by automating repetitive tasks. In addition, the overall accuracy of models has improved significantly as a computer system is capable of accuracy of millionths and higher. Students studying this technology will become familiar with the terminology, capabilities, and operation of computer aided drafting software using AutoCAD as a typical CAD program. In this module, the student will complete the learning of the editing commands. In order for an engineering technician to be successful with AutoCAD, he/she must be proficient at applying the program's editing functions. The student will continue the learning of the "modifying editing" commands: ROTATE, STRETCH, EXTEND, TRIM, BREAK, DDEDIT, and SCALE. In addition, the MIRROR command will be presented as a "constructive editing" command. Finally, AutoCAD's automatic editing process will be discussed. Typical editing commands use a verb-noun format. That is, the command is issued first (verb) followed by the selection of objects upon which to act. Automatic editing uses GRIPS to edit using noun-verb. That is, select the objects first, then apply the command. The value in GRIPS is that once the object(s) is selected, the commands of STRETCH, COPY, MOVE, ROTATE, SCALE, and MIRROR are automatically implied!

Presentation Outline:

I. Perform Intermediate Editing Commands
   - A. Perform mirror images of objects (MIRROR)
   - B. Perform rotations on objects (ROTATE)
   - C. Perform scaling of objects (SCALE)
   - D. Change the length of existing objects
     1. STRETCH
     2. EXTEND
     3. TRIM
     4. BREAK
   - E. Perform text editing (DDEDIT)

F. Study the use of automatic editing using the noun-verb format (GRIPS)

Practical Application:

Students will observe and participate in the discussion of the topics listed above. Following the demonstrations, students will complete the lab work assigned by the instructor.

Evaluation and/or Verification:

Successful completion of this technical module will be based on the students' successful completion of the following components:

a. Perform mirroring of objects;
b. Perform rotations on objects;
c. Perform scaling of objects;
d. Change the length of existing objects using;
   (1) STRETCH;
   (2) EXTEND;
   (3) TRIM;
   (4) BREAK;
e. Perform text editing; and,
f. Perform automatic editing using the noun-verb format (GRIPS).

Summary:

Review the main lesson points using the suggested text(s) listed in the reference section of this module. Hold class discussion and answer student questions.

Next Lesson Assignment:

MASTER Technical Module (LSR-H10) pertaining to creating multiple view drawings.

LSR-H9-HO
Perform Intermediate Editing Commands
Attachment 1: **MASTER** Handout

Objective(s):

Upon completion of this unit the student will be able to:

a. Mirror objects (MIRROR);
b. Rotate objects (ROTATE);
c. Scale objects (SCALE);
d. Change the length of existing objects;
   (1) STRETCH;
   (2) EXTEND;
   (3) TRIM;
   (4) BREAK;
e. Edit text (DDEDIT); and,
f. Perform automatic editing using the noun-verb format (GRIPS).

Note: AutoCAD commands are in caps.

Module Outline:

I. Perform Intermediate Editing Commands
   A. Perform mirror images of objects (MIRROR)
   B. Perform rotations on objects (ROTATE)
   C. Perform scaling of objects (SCALE)
   D. Change the length of existing objects
      1. STRETCH
      2. EXTEND
      3. TRIM
      4. BREAK
   E. Perform text editing (DDEDIT)
   F. Study the use of automatic editing using the noun-verb format (GRIPS)

Successful completion of this technical module will be based on the students' successful completion of the following components:

a. Perform mirroring of objects;
b. Perform rotations on objects;
c. Perform scaling of objects;
d. Change the length of existing objects using;
   (1) STRETCH;
   (2) EXTEND;
   (3) TRIM;
   (4) BREAK;
e. Perform text editing; and,
f. Perform automatic editing using the noun-verb format (GRIPS).

LASER MACHINING SERIES

MASTER Technical Module No. LSR-H10

Subject: Laser Machining **Time:** 5 Hrs.

Duty: Perform Computer-Aided Drafting (CAD)
Task: Create Multiple View Drawings

Note: AutoCAD® is being used as a typical CAD system

Objective(s):

Upon completion of this unit the student will be able to:
a. Demonstrate an understanding of 3rd angle projection;
b. Create and place appropriate orthogonal views;
c. Draw construction lines from one view to create other views; and,
d. Use existing geometry to place other views (POINT FILTERS).

Note: AutoCAD commands are in caps.

Instructional Materials:

AutoCAD software: Release 13 (DOS or Windows) preferred but, minimum, Release 12
486 DX2 or Pentium computer (IBM compatible) with SVGA monitor
Prototype drawings for A and B size per LSR-H3-HO2
MASTER Handout (LSR-H10-HO)
MASTER Laboratory Exercise (LSR-H10-LE)

References:

AutoCAD and its Applications; Release 13 for DOS, Shumaker, Terence and Madsen, David, Goodheart-Willcox Publishing, Latest Edition
Discovery AutoCAD R12, Dix, Mark & Riley, Paul, Prentice Hall Publishing, Latest Edition
Inside AutoCAD Release 13c4, Pitzer, David, Soen, Francis, Fulmer, Howard, et al., New Riders Publishing, Latest Edition
Technical Drawing, Giesecke, Frederick, et al., Macmillan Publishing, Latest Edition
Multi and Sectional View Drawings, American National Standard Engineering Drawing and Related Documentation Practices, ANSI Y14.3-1975, American Society of Mechanical Engineers, Latest Edition

Student Preparation:

Students should have previously completed the following Technical Modules:
LSR-H9 "Perform Intermediate Editing Commands"

Introduction:

The objective of Computer Aided Drafting (CAD) is to apply computer technology in the creation and communication of designs. Engineering drawings are an integral part of industry. The drawings or, in a CAD system, the data base, serves as the link between design and manufacturing. Computer technology provides the means of rapidly communicating drawings (created with respect to engineering standards) to manufacturing using a common database. CAD has replaced manual board drafting. CAD has not replaced the concepts and principles used when drafting was performed manually. CAD has, however, improved the productivity of the design/drafting process by automating repetitive tasks. In addition, the overall accuracy of models has improved significantly as a computer system is capable of accuracy of millionths and higher. Students studying this technology will become familiar with the terminology, capabilities, and operation of computer aided drafting software using AutoCAD as a typical CAD program. In this module, the student will learn how to create a drawing with multiple views. The student will learn how to take and place views using the conventions from ANSI Y14.3. The student will develop the CAD skills required to create these views by utilizing construction lines and point filters.

Presentation Outline:

I. Create Multiview Drawings
   - A. Study the concept of third angle projection
   - B. Create and place appropriate orthogonal views
   - C. Draw construction lines from one view to create other views
   - D. Use existing geometry to place other views (POINT FILTERS)

Practical Application:

Students will observe and participate in the discussion of the topics listed above. Following the demonstrations, students will complete the drawings assigned by the instructor using the B and C size prototypes.

Evaluation and/or Verification:

Successful completion of this technical module will be based on the students' successful completion of the following components:

a. Demonstrate an understanding of 3rd angle projection;

b. Create and place appropriate orthogonal views;
c. Draw construction lines from one view to create other views; and,
d. Use existing geometry to place other views (POINT FILTERS).

Summary:

Review the main lesson points using the suggested text(s) listed in the reference section of this module. Hold class discussion and answer student questions.

Next Lesson Assignment:

MASTER Technical Module (LSR-H11) pertaining to sectioned drawings.

LSR-H10-HO
Create Multi View Drawings
Attachment 1: **MASTER** Handout

Objective(s):

Upon completion of this unit the student will be able to:

a. Demonstrate an understanding of 3rd angle projection;
b. Create and place appropriate orthogonal views;
c. Draw construction lines from one view to create other views; and,
d. Use existing geometry to place other views (POINT FILTERS).

Note: AutoCAD commands are in caps.

Module Outline:

I. Create Multiview Drawings
   A. Study the concept of third angle projection
   B. Create and place appropriate orthogonal views
   C. Draw construction lines from one view to create other views
   D. Use existing geometry to place other views (POINT FILTERS)

Successful completion of this technical module will be based on the students' successful completion of the following components:

a. Demonstrate an understanding of 3rd angle projection;
b. Create and place appropriate orthogonal views;
c. Draw construction lines from one view to create other views; and,
d. Use existing geometry to place other views (POINT FILTERS).

LASER MACHINING SERIES

MASTER Technical Module No. LSR-H11

Subject: Laser Machining **Time:** 5 Hrs.

Duty: Perform Computer-Aided Drafting (CAD)
Task: Create Sectioned Drawings

Note: AutoCAD® is being used as a typical CAD system

Objective(s):

Upon completion of this unit the student will be able to:

a. Demonstrate an understanding of section views;
b. Create section lines and hatch patterns on a drawing;
   (1) PLINE;
   (2) HATCH; and,
   (3) BHATCH.

Note: AutoCAD commands are in caps.

Instructional Materials:

AutoCAD software: Release 13 (DOS or Windows) preferred but, minimum, Release 12
486 DX2 or Pentium computer (IBM compatible) with SVGA monitor
Prototype drawings for A and B size per LSR-H3-HO2
MASTER Handout (LSR-H11-HO)
MASTER Laboratory Exercise (LSR-H11-LE)

References:

AutoCAD and its Applications; Release 13 for DOS, Shumaker, Terence and Madsen, David, Goodheart-Willcox Publishing, Latest Edition
Discovery AutoCAD R12, Dix, Mark & Riley, Paul, Prentice Hall Publishing, Latest Edition
Inside AutoCAD Release 13c4, Pitzer, David, Soen, Francis, Fulmer, Howard, et al., New Riders Publishing, Latest Edition
Technical Drawing, Giesecke, Frederick, et al., Macmillan Publishing, Latest Edition
Multi and Sectional View Drawings, American National Standard Engineering Drawing and Related Documentation Practices, ANSI Y14.3-1975, American Society of Mechanical Engineers, Latest Edition

Student Preparation:

Students should have previously completed the following Technical Modules:
LSR-H10 "Create Multi View Drawings"

Introduction:

The objective of Computer Aided Drafting (CAD) is to apply computer technology in the creation and communication of designs. Engineering drawings are an integral part of industry. The drawings or, in a CAD system, the data base, serves as the link between design and manufacturing. Computer technology provides the means of rapidly communicating drawings (created with respect to engineering standards) to manufacturing using a common database. CAD has replaced manual board drafting. CAD has not replaced the concepts and principles used when drafting was performed manually. CAD has, however, improved the productivity of the design/drafting process by automating repetitive tasks. In addition, the overall accuracy of models has improved significantly as a computer system is capable of accuracy of millionths and higher. Students studying this technology will become familiar with the terminology, capabilities, and operation of computer aided drafting software using AutoCAD as a typical CAD program. In this module, the student will learn how to take a section from an object. Coverage includes placement of sections together with naming the section and indicating how the section is viewed. Finally, the methods for placing section lines on the drawing are discussed.

Presentation Outline:

I. Create Sectioned Drawings
   - A. Discuss and identify section views
   - B. Create section lines and hatch patterns on a drawing
     1. PLINE
        Note: PLINE may be used to create section borders and cutting-plane lines
     2. HATCH
     3. BHATCH

Practical Application:

Students will observe and participate in the discussion of the topics listed above. Following the demonstrations, students will complete the drawings assigned by the instructor using the B and C size prototypes.

Evaluation and/or Verification:

Successful completion of this technical module will be based on the students' successful completion of the following components:

a. Demonstrate an understanding of section views;
b. Create section lines and hatch patterns on a drawing using:
   (1) PLINE;
   (2) HATCH; and,
   (3) BHATCH.

Summary:

Review the main lesson points using the suggested text(s) listed in the reference section of this module. Hold class discussion and answer student questions.

Next Lesson Assignment:

MASTER Technical Module (LSR-H12) pertaining to the investigation and use of basic dimensioning.

LSR-H11-HO
Create Sectioned Drawings
Attachment 1: **MASTER** Handout

Objective(s):

Upon completion of this unit the student will be able to:

a. Demonstrate an understanding of section views;
b. Create section lines and hatch patterns on a drawing;
   (1) PLINE;
   (2) HATCH; and,
   (3) BHATCH.

Module Outline:

I. Create Sectioned Drawings
   A. Discuss and identify section views
   B. Create section lines and hatch patterns on a drawing
      1. PLINE
         Note: PLINE may be used to create section borders and cutting-plane lines
      2. HATCH
      3. BHATCH

LSR-H11-LE
Create Sectioned Drawings
Attachment 2: **MASTER** Laboratory Exercise

Successful completion of this technical module will be based on the students' successful completion of the following components:

a. Demonstrate an understanding of section views;
b. Create section lines and hatch patterns on a drawing using:
   (1) PLINE;
   (2) HATCH; and,
   (3) BHATCH.

LASER MACHINING SERIES

MASTER Technical Module No. LSR-H12

Subject: Laser Machining **Time:** 5 Hrs.

Duty: Perform Computer-Aided Drafting (CAD)
Task: Investigate Basic Dimensioning

Note: AutoCAD® is being used as a typical CAD system

Objective(s):

Upon completion of this unit the student will be able to:
a. Study methods for dimensioning objects (DIM); and,
b. Apply methods for changing dimension settings (DIMVARS).

Note: AutoCAD commands are in caps.

Instructional Materials:

AutoCAD software: Release 13 (DOS or Windows) preferred but, minimum, Release 12
486 DX2 or Pentium computer (IBM compatible) with SVGA monitor
Prototype drawings for A and B size per LSR-H3-HO2
MASTER Handout (LSR-H12-HO)
MASTER Laboratory Exercise (LSR-H12-LE)

References:

AutoCAD and its Applications; Release 13 for DOS, Shumaker, Terence and Madsen, David, Goodheart-Willcox Publishing, Latest Edition
Discovery AutoCAD R12, Dix, Mark & Riley, Paul, Prentice Hall Publishing, Latest Edition
Inside AutoCAD Release 13c4, Pitzer, David, Soen, Francis, Fulmer, Howard, et al., New Riders Publishing, Latest Edition

Student Preparation:

Students should have previously completed the following Technical Modules:
LSR-H11 "Create Sectioned Drawings"

Introduction:

The objective of Computer Aided Drafting (CAD) is to apply computer technology in the creation and communication of designs. Engineering drawings are an integral part of industry. The drawings or, in a CAD system, the data base, serves as the link between design and manufacturing. Computer technology provides the means of rapidly communicating drawings (created with respect to engineering standards) to manufacturing using a common database. CAD has replaced manual board drafting. CAD has not replaced the concepts and principles used when drafting was performed manually. CAD has, however, improved the productivity of the design/drafting process by automating repetitive tasks. In addition, the overall accuracy of models has improved significantly as a computer system is capable of accuracy of millionths and higher. Students studying this technology will become familiar with the terminology, capabilities, and operation of computer aided drafting software using AutoCAD as a typical CAD program. In this module, the student will learn how to use the AutoCAD dimension commands including how to change dimension settings. These settings are referred to as DIMVARS (DIMension VARiableS). The student will become familiar with linear, angular, aligned, diameter, and radial dimensioning. Coverage of DIMVARS includes setting text and arrow sizes, extension line lengths, etc.

Presentation Outline:

I. Investigate Basic Dimensioning
   - A. Study methods for dimensioning objects (DIM)
     1. Introduction
     2. Linear dimensions
     3. Aligned dimensions
     4. Angular dimensions
     5. Chain and datum dimensioning
     6. Dimensioning circles
     7. Dimensioning arcs
   - B. Apply methods for changing dimension settings (DIMVARS)

Practical Application:

Students will observe and participate in the discussion of the topics listed above. Following the demonstrations, students will complete the drawings assigned by the instructor using the B size prototype.

Evaluation and/or Verification:

Successful completion of this technical module will be based on the students' successful completion of the following components:

a. Demonstrate an understanding for dimensioning objects (DIM); and,
b. Apply methods for changing dimension settings (DIMVARS).

Summary:

Review the main lesson points using the suggested text(s) listed in the reference section of this module. Hold class discussion and answer student questions.

Next Lesson Assignment:

MASTER Technical Module (LSR-H13) pertaining to advanced dimensioning.

LSR-H12-HO
Investigate Basic Dimensioning
Attachment 1: **MASTER** Handout

Objective(s):

Upon completion of this unit the student will be able to:

a. Study methods for dimensioning objects (DIM); and,
b. Apply methods for changing dimension settings (DIMVARS).

Note: AutoCAD commands are in caps.

Module Outline:

I. Investigate Basic Dimensioning
   A. Study methods for dimensioning objects (DIM)
      1. Introduction
      2. Linear dimensions
      3. Aligned dimensions
      4. Angular dimensions
      5. Chain and datum dimensioning
      6. Dimensioning circles
      7. Dimensioning arcs
   B. Apply methods for changing dimension settings (DIMVARS)

LSR-H12-LE
Investigate Basic Dimensioning
Attachment 2: **MASTER** Laboratory Exercise

Successful completion of this technical module will be based on the students' successful completion of the following components:

a. Demonstrate an understanding for dimensioning objects (DIM); and,
b. Apply methods for changing dimension settings (DIMVARS).

LASER MACHINING SERIES

MASTER Technical Module No. LSR-H13

Subject: Laser Machining **Time:** 10 Hrs.

Duty: Perform Computer-Aided Drafting (CAD)
Task: Perform Advanced Dimensioning

Note: AutoCAD® is being used as a typical CAD system

Objective(s):

Upon completion of this unit the student will be able to:
a. Create and use Dimension Styles (DDIM); and,
b. Apply geometric dimensioning from ANSI Y14.5.

Note: AutoCAD commands are in caps.

Instructional Materials:

AutoCAD software: Release 13 (DOS or Windows) preferred but, minimum, Release 12
486 DX2 or Pentium computer (IBM compatible) with SVGA monitor
Prototype drawings for A and B size per LSR-H3-HO2
MASTER Handout (LSR-H13-HO)
Create as a drawing file, three views of the Index Feed as found in *Technical Drawing,* Giesecke, Frederick, et al., Latest Edition - **MASTER** Laboratory Handout No. 2 (LSR-H13-HO2). Use the C size prototype.
MASTER Handout No. 3 (LSR-H13-HO3)
MASTER Laboratory Exercise (LSR-H13-LE)

References:

AutoCAD and its Applications; Release 13 for DOS, Shumaker, Terence and Madsen, David, Goodheart-Willcox Publishing, Latest Edition
Discovery AutoCAD R12, Dix, Mark & Riley, Paul, Prentice Hall Publishing, Latest Edition
Inside AutoCAD Release 13c4, Pitzer, David, Soen, Francis, Fulmer, Howard, et al., New Riders Publishing, Latest Edition
Technical Drawing, Giesecke, Frederick, et al., Macmillan Publishing, Latest Edition

Dimensioning and Tolerancing, American National Standard Engineering Drawing and Related Documentation Practices, ANSI Y14.5M-1994, American Society of Mechanical Engineers, Latest Edition

Student Preparation:

Students should have previously completed the following Technical Modules:
LSR-H12 "Investigate Basic Dimensioning"

Introduction:

The objective of Computer Aided Drafting (CAD) is to apply computer technology in the creation and communication of designs. Engineering drawings are an integral part of industry. The drawings or, in a CAD system, the data base, serves as the link between design and manufacturing. Computer technology provides the means of rapidly communicating drawings (created with respect to engineering standards) to manufacturing using a common database. CAD has replaced manual board drafting. CAD has not replaced the concepts and principles used when drafting was performed manually. CAD has, however, improved the productivity of the design/drafting process by automating repetitive tasks. In addition, the overall accuracy of models has improved significantly as a computer system is capable of accuracy of millionths and higher. Students studying this technology will become familiar with the terminology, capabilities, and operation of computer aided drafting software using AutoCAD as a typical CAD program. In this module, the student will learn how to dimension as a professional engineering technician. Coverage includes creating dimension styles to obtain specific dimensioning requirements such as, tolerancing. The student will learn how to create and place dimensions using the conventions from ANSI Y14.5.

Presentation Outline:

I. Perform Advanced Dimensioning
   A. Create and use dimension styles (DDIM)
   B. Apply geometric dimensioning from ANSI Y14.5

Practical Application:

Students will observe and participate in the discussion of the topics listed above. Following the demonstrations, students will complete the drawings assigned by the instructor using the D size prototype.

Evaluation and/or Verification:

Successful completion of this technical module will be based on the students' successful completion of the following components:

a. Create and use Dimension Styles (DDIM); and,
b. Apply geometric dimensioning from ANSI Y14.5.

Summary:

Review the main lesson points using the suggested text(s) listed in the reference section of this module. Hold class discussion and answer student questions.

Next Lesson Assignment:

MASTER Technical Module (LSR-H14) pertaining to using and manipulating blocks.

LSR-H13-HO1
Perform Advanced Dimensioning
Attachment 1: **MASTER** Handout No. 1

Objective(s):

Upon completion of this unit the student will be able to:
a. Create and use Dimension Styles (DDIM); and,
b. Apply geometric dimensioning from ANSI Y14.5.

Note: AutoCAD commands are in caps.

Module Outline:

I. Perform Advanced Dimensioning
   A. Create and use dimension styles (DDIM)
   B. Apply geometric dimensioning from ANSI Y14.5

Three views of Index Feed

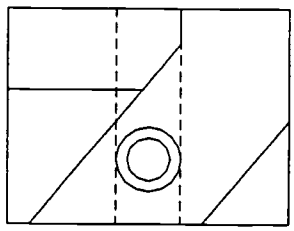

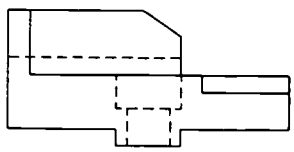

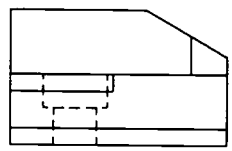

Dimensioning Tutorial

This tutorial will dimension the index feed. All the appropriate standards per ANSI Y14.5 will be applied. We will create parent and child dimension styles and use AutoCAD's dimensioning commands to develop a professional drawing. Read in the file which contains the three views of the index slide.

Preparing for dimensioning:

1. Create center lines for all circular features in plan views. If there are a group of concentric circles (e.g., drill and counterbore), always create the center lines using the largest diameter circle.
2. Create a center line for all cylindrical features in front and side views.
3. Ensure the text style Roman Simplex is used. Do not used Standard text. It is ugly!

Some dimensioning basics:

1. **Every dimension has a tolerance.** If the tolerance is not stated as part of the dimension (such as the .750 - .745 dimension for the Index Slide), the tolerance is defined in the title block. Realize that the number of decimal points indicates tolerance. In the title block we will use, it is stated that two decimal places indicates _.03 and three decimal places indicates _.010. The title block also states that zero decimal places indicates an angle at _1°.
2. For decimals less than 1.000, NO lead in zero is used.
3. All dimensions must be OFF the part.
4. Never dimension to a hidden line or the center line of a hidden feature.
5. Whenever possible, place the dimension in the view which shows the dimensioned feature as an edge.
6. Diameter leader lines pointing at a circle(s) must be placed such that if the leader was continued, it would pass through the center of the circle.
7. Always show a visible gap between the extension line and the object. However, when using center lines for extension lines NO GAP is used.
8. Never ruin center lines by running dimension extension lines through circles.

Using AutoCAD dimension styles:

The AutoCAD dimension styles are used to set up dimensioning parameters to handle the look and placement of all the part's dimensions. The dimensioning style

will also be used for creating center lines for circular features. Look at the Index Feed: there are fourteen (14) linear dimensions, three (3) angular dimensions, one (1) dimension needing a special tolerance, and one (1) hole note.

Center lines are needed in all three views: in the top view, the drill and counterbore is a circular feature, while in the front and side views, they are cylindrical features.

We have been required to dimension this part for _.010. Therefore, all our dimensions will contain three decimal places as dictated by our title block. We will dimension the angles at _1°, therefore, zero decimal places will be needed.

We will need three styles for our task: a style called "Main," one called "Centerlines" and one called "750-745-tol." These three styles will handle all the dimensioning requirements.

First, however, let's establish the correct text style. Data → Text Style → Type Romans <enter> → select the font file ROMANS.SHX and OK the dialog box → accept all defaults until the Command: line is reached. Romans (or roman simplex) is now the style.

Creating the centerline style and placing center lines on the drawing

First, let's create a dimension style for our center lines needed in the top view. Get the dimensioning toolbar: Tools → Toolbars → Dimensioning. The last icon is the Dimension styles. Select this icon and enter the dimension styles dialog box. There is always a standard style given. Where the style is listed next to the word "Name:" highlight the word STANDARD, type centerlines, then click the "Save" button. You should have a message: "Created CENTERLINES from STANDARD".

Centerlines will be a Parent style with no children. Note that there are three areas for setting: Geometry, Format, and Annotation. (These dialog box are shown in appendix D.) Enter Geometry. In the dialog box:

Center: "Line" should be on
Size: Should be .05
Leave all other values at their default
OK

Click on Save to save this setting and OK the dim styles dialog box.

Now, we will place the center lines on the circular features in the top view. Make sure the current layer is "Cen". Click on the center mark icon (the 8th icon). For **"Select arc or circle"** pick the largest circle, the counter bore. The centerlines appear.

Use the line command to create the vertical center lines required in the front and side views. Note that the lines must extend beyond the feature. Typically, I will draw a line selecting an appropriate line of the feature to use for mid point (in the front view, the hidden line representing the bottom of the counterbore works fine). Then, turn on ORTHO and stretch out the line. Use grips as appropriate to position and/or stretch the centerline. Then, copy this line to the side view to ensure compatibility of size and position.

You should have figure 1.

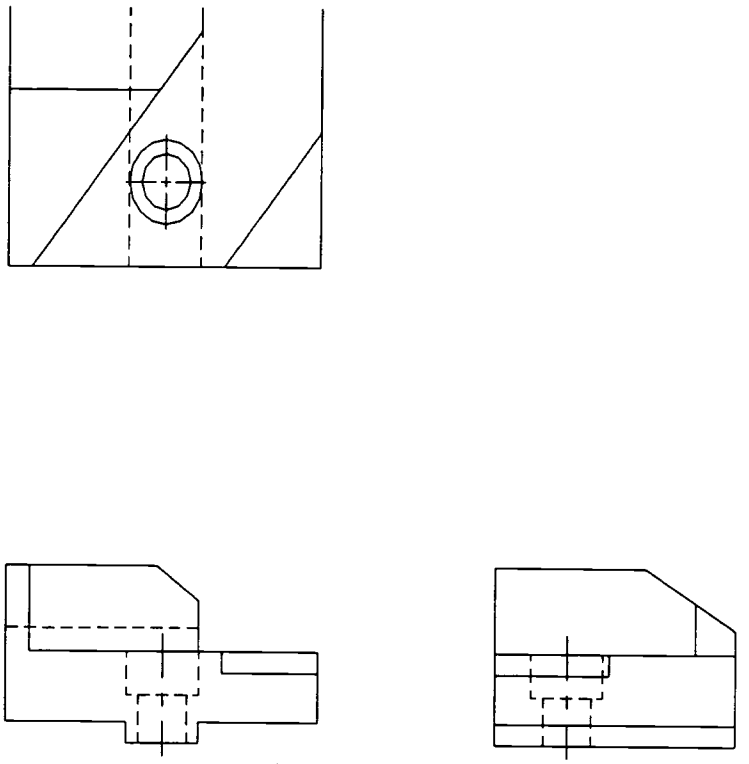

Figure 1

Creating the style Main and placing dimensions on the drawing

We will now create a parent dimension style called Main. In this parent style we will have three children: Linear, Diameter, and Angular.

Let's first set up the Parent style. Set the style STANDARD as the current style. Where the style is listed next to the word "Name:" Highlight the word STANDARD, type Main, then click the "Save" button. You should have a message: "Created MAIN from STANDARD".

Note that there are three areas for setting: Geometry, Format, and Annotation. Enter Geometry. In the dialog box:

Dimension Line: "Spacing" should be .625
Arrowheads: "Size" should be 5/32
Extension Line: "Origin Offset" should be .09
Leave all other values as their default.
OK

Some explanations, the dimension line spacing is the spacing of dimensions when baseline is used. The arrowhead and text size will be the ANSI preferred 5/32. Origin Offset is the gap between the extension line and the object. If a tangential edge is dimensioned, the .09 works better than the default .0625.

Next go into Format. In the dialog box:
Leave all values at their default
OK

Next, go into annotation. In the dialog box:
Primary Units: Click on "Units". A sub-dialog box comes up:
Units: Decimal
Dimension: "Precision" should be three decimal places.
Zero Suppression: "Leading" should be "x" indicating on.
Angles and tolerance will be set later
OK
Text: Style should be ROMANS
Height: 5/32
Gap: .05
Accept all other default values.
OK

Back at the first dialog box, Click on Save to save our settings for the dimension parent style of Main.

Creating the children: Linear, diameter, and angular

Return to the dimension style main dialog box if you are not already there. Make sure the style Main is current. ***For our linear child,*** simply click on "Linear" and then "Save". The settings that were used for the Parent all apply to linear dimensions without any other changes.

Return to the dimension style main dialog box if you are not already there. Make sure the style Main is current. ***For our diameter child,*** click on "Diameter".

Click on Geometry. In the dialog box:
Center Mark: Should be "None" (We will use a separate style to create center lines)

Leave all other values at their default
OK

Click on Format. In the dialog box:
Click on "User Defined"
Fit: Should be "Arrows only" (These settings allow us to dimension diameters as leaders)
OK

There is no need to enter Annotation. The settings will not change from the parent. From the main dimension styles dialog box, click on save to save our diameter child settings.

Return to the dimension style main dialog box if you are not already there. Make sure the style Main is current. ***For our angular child,*** click on "Angular".

There will be no changes to Geometry or Format.

Go into annotation. In the dialog box:
Primary Units: Click on "Units". A sub-dialog box comes up:
Angles: Decimal Degrees
Dimension: "Precision" should be no decimal places.
OK
Accept all other default values.

IMPORTANT: Do not confuse Tolerance precision with Dimension precision. Just because tolerance precision is under Angles, it is easy to enter the decimal precision in the wrong area. Again, Angle decimal places are set under Dimension precision NOT Tolerance precision.

OK

From the main dimension styles dialog box, click on save to save our angular child settings.

This parent child system works as follows. When the parent style "Main" is the current dimension style, any linear dimension placed on the drawing follows the settings for the linear child. When an angular dimension is placed on the drawing, the settings for the angular child are used automatically. And when a diameter dimension is placed on the drawing, the settings for the diameter child are used automatically. Make sure, in the dimension styles dialog box, MAIN is the current setting.

Let's go to work: Top view dimensions

Let's start by dimensioning the .750 height to the drill/counterbore centerline and the 2.5 overall.

In the dimension toolbar, click on the first icon (linear dimensions):

First extension line origin or RETURN to select: select the end point (or intersection) of the lower left corner
Second extension line origin: select the midpoint of the drill/counterbore centerline
Dimension line location (Text/Angle/Horizontal/Vertical/Rotated): Place the dimension in an appropriate position

We will use baseline to get the 2.500 overall. Select the baseline icon (the 6th icon):

Second extension line origin or RETURN to select: select the endpoint of the upper left corner of the object

The 2.500 dimension appears (the spacing of .625 from the first dimension was established in the dimension style).

<enter> twice to get back to the command line. You now have figure 2.

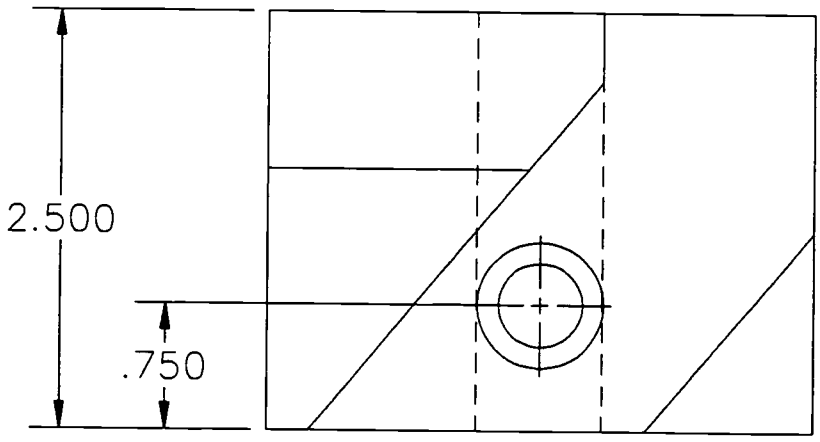

Figure 2

Note that there are visible gaps for the extension lines except for where the centerline is used. This was the reason for using "midpoint" when creating the .750 dimension.

Let us now continue with this view and add four more dimensions. Although the .250 and 1.000 dimensions would be in a plan view, there is no other view which shows these features on edge. Therefore, we will use the top view for both. Also, we will dimension the distance from edge to the center of the drill/counterbore and the 3.25 overall. The dimension style is already set so let's go. First, the .250. Select the linear icon (the 1st icon) from the dimension toolbar. Use the appropriate endpoints and place the .250 dimension in a reasonable location. Now the 1.630 for the drill/counterbore location. Select the baseline icon, and select the midpoint of the centerline. The 1.630 places itself. The baseline command is still active, therefore, select the endpoint of the object at the lower right corner and the 3.250 dimension appears. <enter> twice to end the command. For the 1.000 dimension, use the first icon (linear) and the appropriate endpoints to get this dimension. You should place the 1.000 dimension in line with the .250. You now have figure 3.

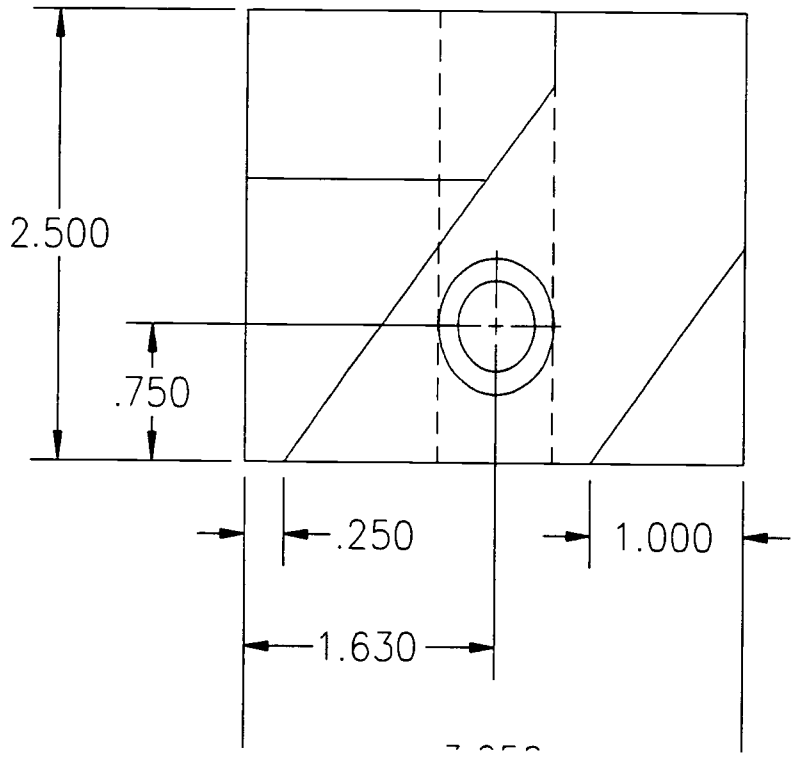

Figure 3

Let's now get the angles in place. Again, there is no need to disturb our dimension style setting. The parent Main is prepared to handle the child angular upon

placement of the dimension. Let's do the 50° angle first. Select the angle icon from the dimension toolbar (the 4th icon):

Select arc, circle, line, or RETURN:
Select the bottom horizontal line of the object.
Second line: select the angled line for the 50°
Dimension arc line location (Text/Angle): Place the text in an appropriate location OFF the part.

Repeat the procedure selecting the appropriate lines to generate the 40° angle. You now have figure 4.

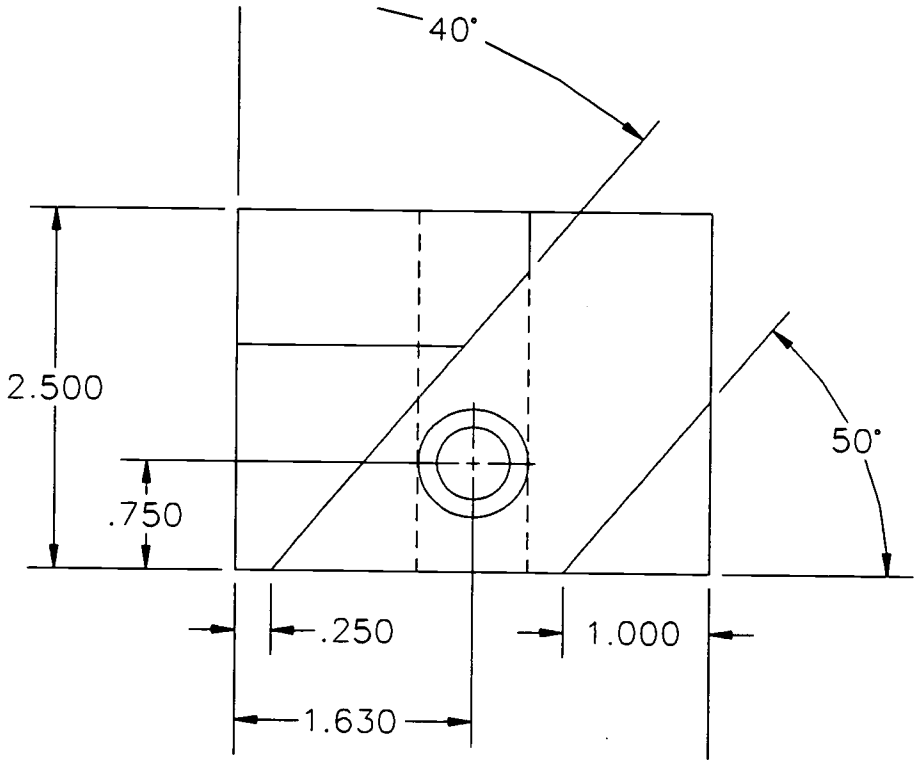

Figure 4

The top view is almost ready. We will now do the hole note. Our leader must point to the largest diameter even though the note begins with the hole diameter. This is best handled by initially dimensioning the counter bore as a diameter. This creates the leader with the proper orientation of pointing to the center of the feature. Then we will perform a text change to list the drill diameter first. We will then follow up with the DTEXT command to add the counterbore data.

Again, our MAIN dim style is prepared to handle the diameter dimensioning.

Select the diameter dimensioning icon from the dimensioning toolbar. The diameter dimensioning icon is a flyout of the radius dimensioning icon (the 3rd icon).

Select arc or circle: Select the counterbore circle

Dimension line location (Text/Angle): T <enter> and the MTEXT dialog box appears (shown in appendix D, last page). Delete the "<>" representing the default text and type in %%c.500

OK the dialog box.

Dimension line location (Text/Angle): Place in a reasonable location. Now, let's finish the note with the counterbore data. Select DTEXT from the Draw toolbar. It is a flyout of the TEXT icon (the last icon).

For Start point: Select a point to align with the hole data.

Height <0.2000>: 5/32

Rotation angle <0>: <enter>

Text: CBORE %%C.750 DEPTH .380 (Note: all capital letters are used).

Text: <enter> to finish the command. You now have figure 5.

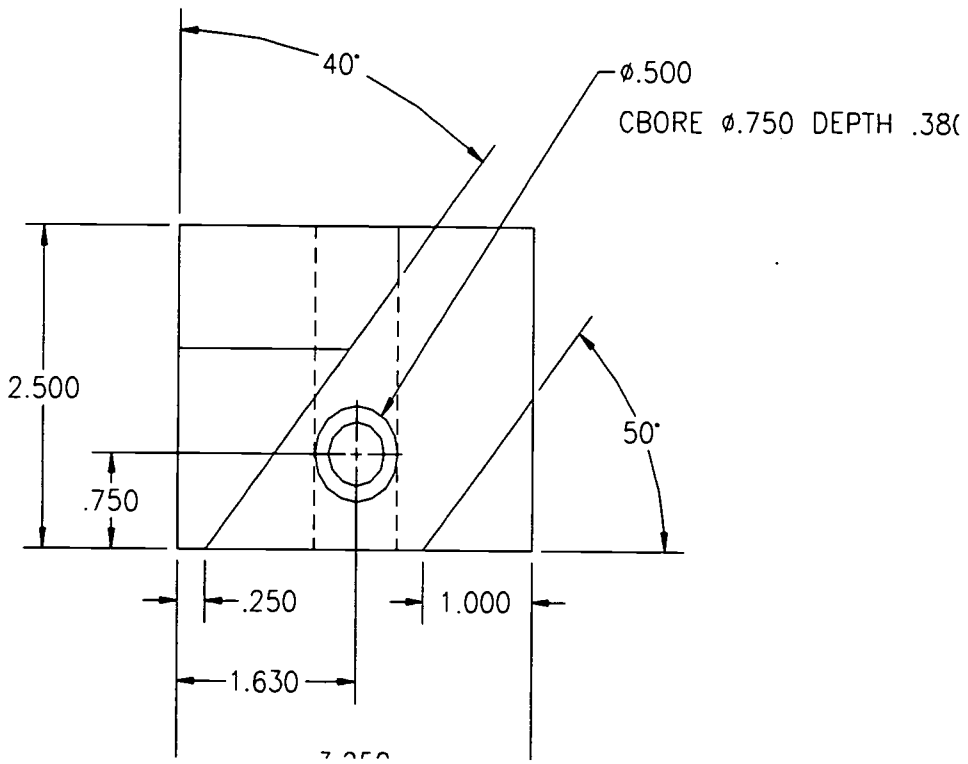

Figure 5

This completes the top view dimensioning. Note that the .940 representing the chamfer feature is not in the top view. This chamfer feature is shown on edge in the side view. The same can be said for the 1.25 dimension for the width of the chamfer feature. This width is shown on edge in the front view. So, let's move on to the front view.

Front view dimensions

Let's start with the vertical dimensions. The 1.560 overall and the .190 tab feature are shown nicely on edge. The same for the .620 feature. However, the depth of the 1.000 x 50° wedge is not shown on edge. But, we have no better option in the side view. So, let's get these four dimensions placed using our MAIN dim style.

We will use the baseline plan as done before to obtain the .19 followed by the 1.56 overall. Click on the linear dimension icon (the 1st icon)

First extension line origin or RETURN to select: use the line endpoint for the bottom of the tab.

Second extension line origin: use the appropriate endpoint
Dimension line location (Text/Angle/Horizontal/Vertical/Rotated): place the text, however, it will fall on the top of the dimension extension lines and into the part as shown in figure 6.

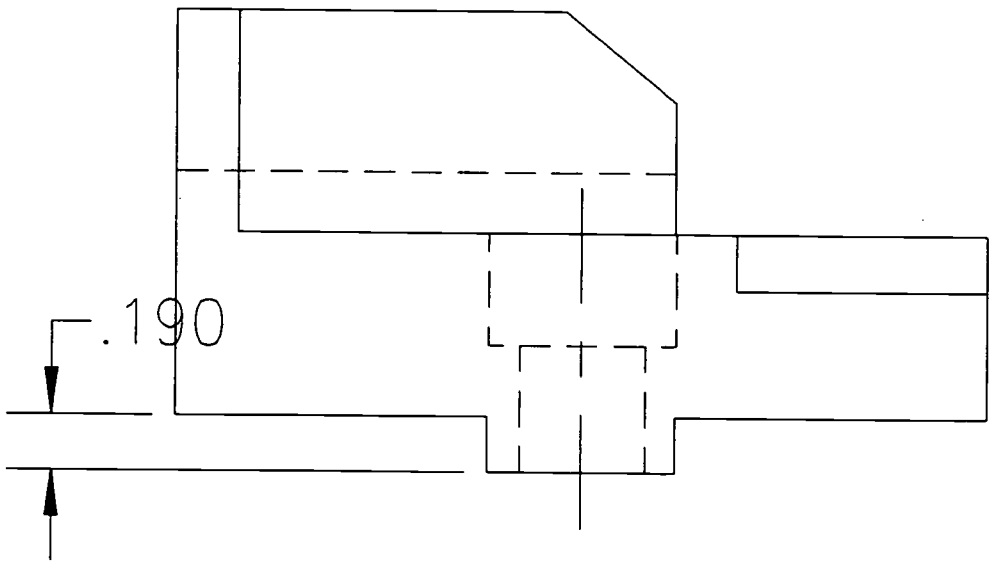

Figure 6

Don't worry, we will fix it later with grips. Now, click on the baseline icon and select the endpoint for the very top of the part. The 1.560 appears. Now, click on the .190 dimension. There is a cold grip in the center of the .190, select it and make it hot. Now, move it into a better position. The two dimensions are shown in figure 7.

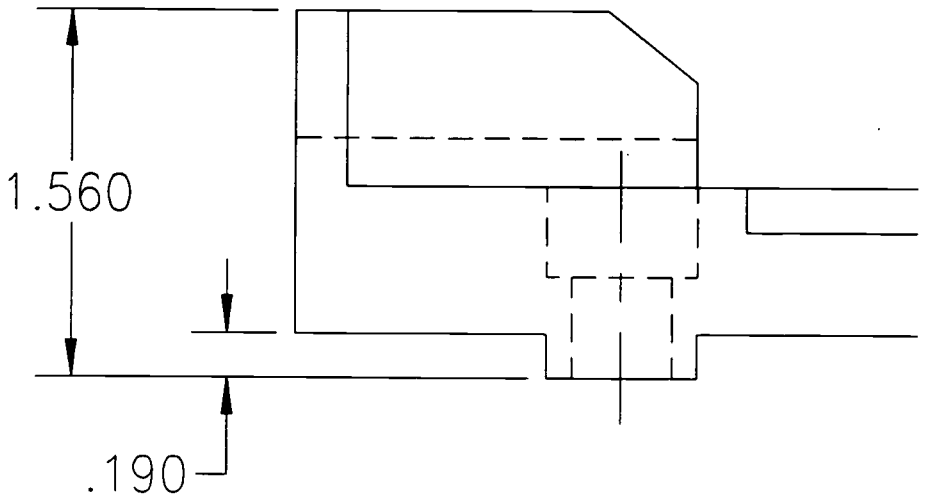

Figure 7

The reason for the placement problem is that AutoCAD will place a dimension based on which end point is picked first. We chose the bottom, then the upper endpoint. If we had chosen the upper first, then the bottom, the dimension would have been placed in the lower position. However, we would have ruined our ability to use baseline as our base point would be wrong. So, remember those grips when it comes to fixing dimensions!!

In a similar manner, place the .190 followed by the .620 dimensions. You will have to perform the same grip trick to obtain the proper placement. These dimensions are shown in figure 8.

There are two 1.250 dimensions to be placed next. The first one locates the tab relative to the left side of the part. The second one, locates the chamfered surface relative to the right side of the part. These are simply linear dimensions, using appropriate endpoints, and placed in a reasonable position. These dimensions are similar to other linear dimensions, therefore, the details will be omitted. You should now have figure 8.

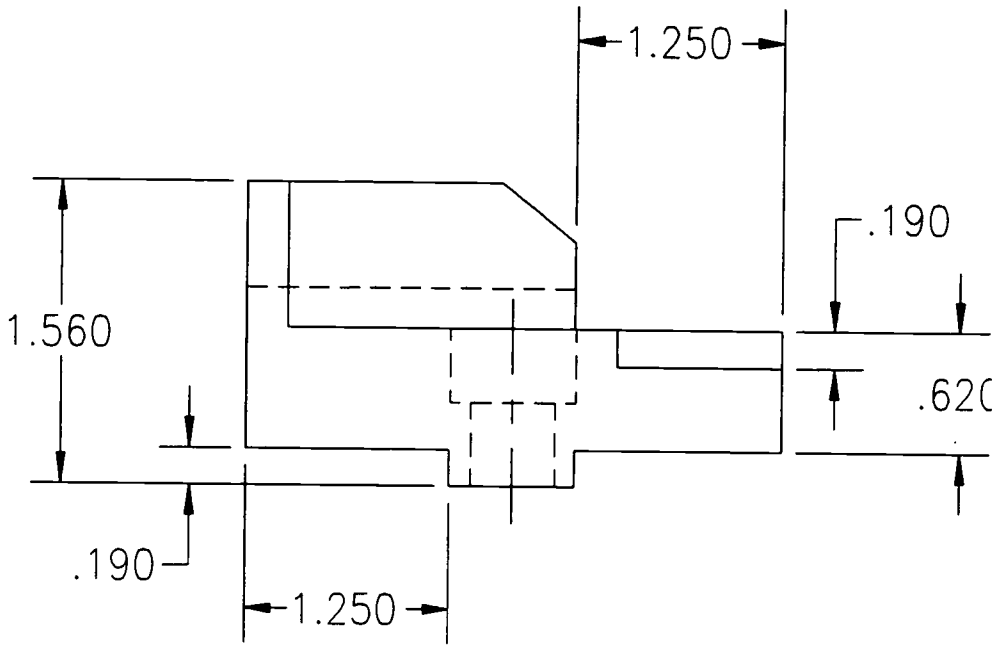

Figure 8

One last dimension remains for the front view, the toleranced .745-.750 dimension. We must create a new dimension style to set up our toleranced dimension.

Click on the Dimension style icon (the last icon in the dimension toolbar). Set the style MAIN as the current style. Where the style is listed next to the word "Name:" Hilight the word MAIN, type 745-750-tol, then click the "Save" button. You should have a message:

"Created 745-750-TOL from MAIN".

Note that there are three areas for setting: Geometry, Format, and Annotation. Because we are creating this style from MAIN, we will only need to enter the Annotation section in order to establish our tolerancing parameters. Click on Annotation. In the dialog box:

Primary Units: Click on "Units". A sub-dialog box comes up:
- Units: Decimal
- Tolerance: "Precision" should be three decimal places.
- Zero Suppression: "Leading" should be "x" indicating on.
- OK

Tolerance: Method should be "Limits".
- Upper Value: Should be .000
- Lower Value: Should be .005

Text: Style should be ROMANS

Height: 5/32
Gap: .05
Accept all other default values.
OK

Back at the first dialog box, Click on Save to save our settings for the dimension parent style of 745-750-TOL.

Some explanations:

The line representing the bottom of the tab was drawn at .750. Therefore, for proper tolerancing, we must subtract .005 from .750 (the lower value) and we must add .000 (the upper value) to .750. This data will yield the proper tolerance.

Also, notice that this has been created as a Parent dimension style. Due to the nature of this toleranced dimension, there would be no changes to make if we created a linear child. Therefore, the parent will do the job fine.

Finally, when setting units, notice that "Dimension Precision" is NOT used. For tolerancing we use "Tolerance Precision"!!

Now, let's create the dimension. Click on the linear dimension icon.

First extension line origin or RETURN to select: <enter> to go into select mode.

Select object to dimension: Simply pick the line (bottom of the tab) representing our .750 length. This is faster than selected two endpoints!

Dimension line location (Text/Angle/Horizontal/Vertical/Rotated): use intersection of the arrow head and extension line of the 1.250 dimension so that this toleranced dimension is inline with the 1.250 dimension.

The front view dimensions are now complete and are shown in figure 9.

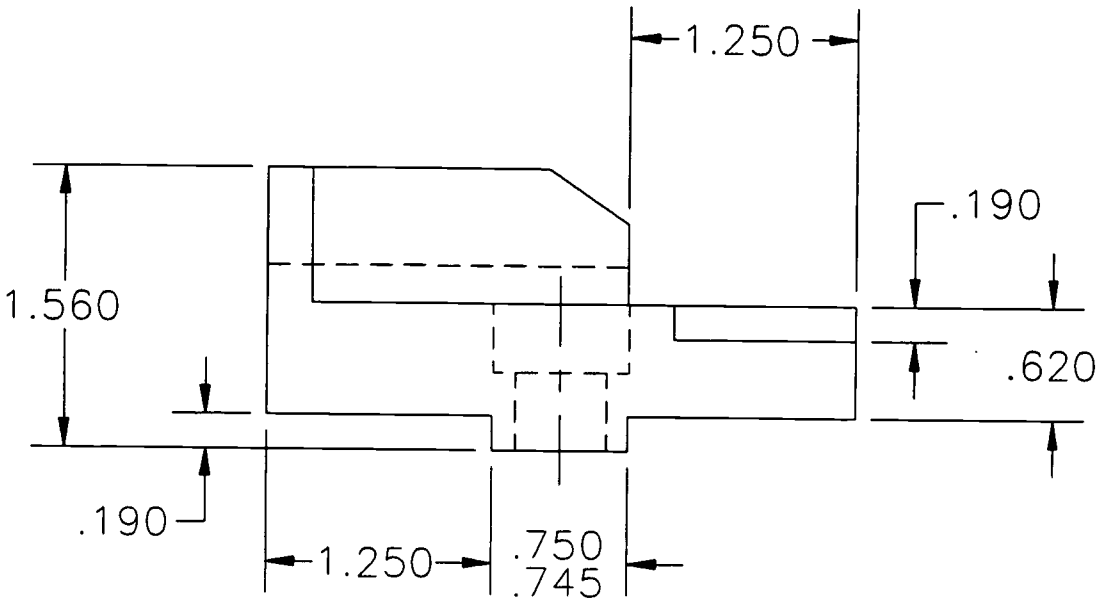

Figure 9

Side view dimensions:

Let's now turn our attention to the side view. The only dimensions remaining are the two necessary to define the chamfered feature, .940 and 30°. First, let's set our dimension style Main as our current style.

Click on the Dimension Style icon (the last one in the dimensioning toolbar). Set MAIN as the current style. Click on OK.

Zoom in on the side view.

Click on the angular dimension icon (the 4th icon).

Select arc, circle, line, or RETURN: select line labeled "Pick this line first" as shown in Figure 10.

Second line: select line labeled "Pick this line second" as shown in fig. 10

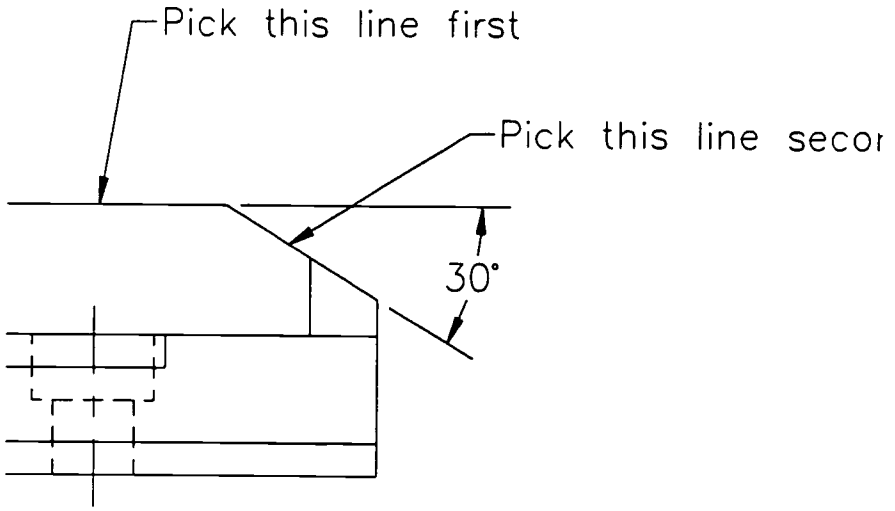

Figure 10

Dimension arc line location (Text/Angle): Place the dimension as appropriate.

Now, for the .940: Click on the linear dimension icon and use endpoints to obtain the .940 dimension and place the dimension in a reasonable space.

This finishes our dimensioning. The final version is shown in Appendix A.

Alternative method for toleranced dimensions:

Here's an alternative to using a tolerance dimension style. With the dimension style MAIN set as current we would have created the 1.250 dimension first. Then use "continue dimension" (the 6th icon). When the continue dimension icon is selected, you are prompted to "select second origin point". Select the appropriate endpoint for the .745-.750 dimension. The dimension is placed automatically inline with the 1.250. Naturally, the dimension reads ".750". End the continue dimension command with a couple of <enter>'s. Now we click on the change property icon. (The letter A in the Object Properties toolbar. Select the .750 dimension and <enter>. In the dialog box, click on annotation and fill in the appropriate areas as described previously. The toleranced dimension is now created.

An important reminder: GRIPS is the best command to use to move dimension text, stretch or shrink extension lines, adjust dimension gap origin size, or rotate diameter or radial dimensions.

Successful completion of this technical module will be based on the students' successful completion of the following components:

a. Create and use Dimension Styles (DDIM); and,
b. Apply geometric dimensioning from ANSI Y14.5.

LASER MACHINING SERIES

MASTER Technical Module No. LSR-H14

Subject: Laser Machining **Time:** 5 Hrs.

Duty: Perform Computer-Aided Drafting (CAD)
Task: Use and Manipulate Blocks

Note: AutoCAD® is being used as a typical CAD system

Objective(s):

Upon completion of this unit the student will be able to:

a. Create a block (BLOCK);
b. Insert blocks into the drawing (INSERT, DDINSERT);
c. Make a block available outside the current drawing (WBLOCK);
d. Assign attributes to blocks (DDATTDEF); and,
e. Edit attribute information (DDATTE).

Note: AutoCAD commands are in caps.

Instructional Materials:

AutoCAD software: Release 13 (DOS or Windows) preferred but, minimum, Release 12
486 DX2 or Pentium computer (IBM compatible) with SVGA monitor
MASTER Handout (LSR-H14-HO)
MASTER Laboratory Exercise (LSR-H14-LE)

References:

AutoCAD and its Applications; Release 13 for DOS, Shumaker, Terence and Madsen, David, Goodheart-Willcox Publishing, Latest Edition
Discovery AutoCAD R12, Dix, Mark & Riley, Paul, Prentice Hall Publishing, Latest Edition
Inside AutoCAD Release 13c4, Pitzer, David, Soen, Francis, Fulmer, Howard, et al., New Riders Publishing, Latest Edition

Student Preparation:

Students should have previously completed the following Technical Modules:
LSR-H13 "Perform Advanced Dimensioning"

Introduction:

The objective of Computer Aided Drafting (CAD) is to apply computer technology in the creation and communication of designs. Engineering drawings are an integral part of industry. The drawings or, in a CAD system, the data base, serves as the link between design and manufacturing. Computer technology provides the means of rapidly communicating drawings (created with respect to engineering standards) to manufacturing using a common database. CAD has replaced manual board drafting. CAD has not replaced the concepts and principles used when drafting was performed manually. CAD has, however, improved the productivity of the design/drafting process by automating repetitive tasks. In addition, the overall accuracy of models has improved significantly as a computer system is capable of accuracy of millionths and higher. Students studying this technology will become familiar with the terminology, capabilities, and operation of computer aided drafting software using AutoCAD as a typical CAD program. In this module, the student will learn how to create, use, and manipulate blocks. Blocks represent drawing elements stored (or saved) in the drawing file. This allows blocks to be used over and over again, thus eliminating repetitive tasks. The use of blocks includes the ability to change the scale and rotation, thus adding another level of flexibility. Coverage in this module also includes attaching constant or variable text to blocks (Attributes).

Presentation Outline:

I. Use and Manipulate Blocks
   - A. Create a block (BLOCK)
   - B. Insert blocks into the drawing (INSERT, DDINSERT)
   - C. Make a block available outside the current drawing (WBLOCK)
   - D. Assign attributes to blocks (DDATTDEF)
   - E. Edit attribute information (DDATTE)

Practical Application:

Students will observe and participate in the discussion of the topics listed above.

Evaluation And/or Verification:

Successful completion of this technical module will be based on the students' successful completion of the following components:

a. Demonstrate the ability to create a BLOCK;
b. Demonstrate the ability to insert blocks into the drawing (INSERT, DDINSERT);
c. Demonstrate the ability to make a block available outside the current drawing by creating a WBLOCK;

d. Demonstrate the ability to assign attributes to blocks (DDATTDEF); and,
e. Demonstrate the ability to edit attribute information (DDATTE).

Summary:

Review the main lesson points using the suggested text(s) listed in the reference section of this module. Hold class discussion and answer student questions.

Next Lesson Assignment:

MASTER Technical Module (LSR-H15) pertaining to using blocks to automate the drawing process.

LSR-H14-HO
Use and Manipulate Blocks
Attachment 1: **MASTER** Handout

Objective(s):

Upon completion of this unit the student will be able to:

a. Create a block (BLOCK);
b. Insert blocks into the drawing (INSERT, DDINSERT);
c. Make a block available outside the current drawing (WBLOCK);
d. Assign attributes to blocks (DDATTDEF); and,
e. Edit attribute information (DDATTE).

Note: AutoCAD commands are in caps.

Module Outline:

I. Use and Manipulate Blocks
   A. Create a block (BLOCK)
   B. Insert blocks into the drawing (INSERT, DDINSERT)
   C. Make a block available outside the current drawing (WBLOCK)
   D. Assign attributes to blocks (DDATTDEF)
   E. Edit attribute information (DDATTE)

LSR-H14-LE
Use and Manipulate Blocks
Attachment 2: **MASTER** Laboratory Exercise

Successful completion of this technical module will be based on the students' successful completion of the following components:

a. Demonstrate the ability to create a BLOCK;
b. Demonstrate the ability to insert blocks into the drawing (INSERT, DDINSERT);
c. Demonstrate the ability to make a block available outside the current drawing by creating a WBLOCK;
d. Demonstrate the ability to assign attributes to blocks (DDATTDEF); and,
e. Demonstrate the ability to edit attribute information (DDATTE).

LASER MACHINING SERIES

MASTER Technical Module No. LSR-H15

Subject: Laser Machining **Time:** 5 Hrs.

Duty: Perform Computer-Aided Drafting (CAD)
Task: Use Blocks to Automate the Drawing Process

Note: AutoCAD® is being used as a typical CAD system

Objective(s):

Upon completion of this unit the student will be able to:
a. Use blocks to create a bill of materials; and,
b. Create a standard parts library.

Note: AutoCAD commands are in caps.

Instructional Materials:

AutoCAD software: Release 13 (DOS or Windows) preferred but, minimum, Release 12
486 DX2 or Pentium computer (IBM compatible) with SVGA monitor
Prototype drawings per LSR-H3-HO2
MASTER Handout (LSR-H15-HO)
MASTER Laboratory Exercise (LSR-H15-LE)
MASTER Laboratory Worksheet (LSR-H15-LW)

References:

AutoCAD and its Applications; Release 13 for DOS, Shumaker, Terence and Madsen, David, Goodheart-Willcox Publishing, Latest Edition
Discovery AutoCAD R12, Dix, Mark & Riley, Paul, Prentice Hall Publishing, Latest Edition
Inside AutoCAD Release 13c4, Pitzer, David, Soen, Francis, Fulmer, Howard, et al., New Riders Publishing, Latest Edition

Student Preparation:

Students should have previously completed the following Technical Modules:
LSR-H14 "Use and Manipulate Blocks"

Introduction:

The objective of Computer Aided Drafting (CAD) is to apply computer technology in the creation and communication of designs. Engineering drawings are an integral part of industry. The drawings or, in a CAD system, the data base, serves as the link between design and manufacturing. Computer technology provides the means of rapidly communicating drawings (created with respect to engineering standards) to manufacturing using a common database. CAD has replaced manual board drafting. CAD has not replaced the concepts and principles used when drafting was performed manually. CAD has, however, improved the productivity of the design/drafting process by automating repetitive tasks. In addition, the overall accuracy of models has improved significantly as a computer system is capable of accuracy of millionths and higher. Students studying this technology will become familiar with the terminology, capabilities, and operation of computer aided drafting software using AutoCAD as a typical CAD program. In this module, the student will learn how to apply the concepts of blocks and attributes, learned in the previous module, to create standard parts libraries and Bills of Materials. Coverage includes starting with a blank screen and creating symbols as blocks. This file is then saved as a typical .DWG file. This file may be inserted in its entirety in another drawing. Following the insertion of the library file, all of the created blocks (the symbols) are available for use.

Presentation Outline:

I. Use Blocks to Automate the Drawing Process
   - A. Create a standard parts library
   - B. Use attributes to create a bill of materials and parts list

Practical Application:

Students will observe and participate in the discussion of the topics listed above. Following the demonstrations, students will complete LSR-H15-LW. Use the A size prototype.

Evaluation and/or Verification:

Successful completion of this technical module will be based on the students' successful completion of the following components:

a. Demonstrate the ability to create and use a standard parts library; and,
b. Demonstrate the ability to create and use attributes in the creation of bills of materials.

Summary:

Review the main lesson points using the suggested text(s) listed in the reference section of this module. Hold class discussion and answer student questions.

Next Lesson Assignment:

MASTER Technical Module (LSR-I1) pertaining to laser safety standards.

LSR-H15-HO
Use Blocks to Automate the Drawing Process
Attachment 1: **MASTER** Handout

Objective(s):

Upon completion of this unit the student will be able to:

a. Use blocks to create a bill of materials; and,
b. Create a standard parts library.

Note: AutoCAD commands are in caps.

Module Outline:

I. Use Blocks to Automate the Drawing Process
   A. Create a standard parts library
   B. Use attributes to create a bill of materials and parts list

Successful completion of this technical module will be based on the students' successful completion of the following components:

a. Demonstrate the ability to create and use a standard parts library; and,
b. Demonstrate the ability to create and use attributes in the creation of bills of materials.

LSR-H15-LW
Use Blocks to Automate the Drawing Process
Attachment 3: **MASTER** Laboratory Worksheet

Library Blocks

In order to simplify the use of common symbology, we will create a library of blocks that are frequently used. In addition, our library will contain the means for an automated parts list in which attributes are assigned to a block in order to allow for variable text.

Starting with a blank AutoCAD drawing, create the following symbols on layer 0 (zero), then block with a convenient name. The length of your block name can be any number of characters. You can use letters or numbers, however, you cannot use a space (space bar input). Instead of a space, you can use a dash (-) to separate words (e.g., FINISH-MARK). By drawing all blocks on layer zero, the inserted block will assume the layer properties of the current layer at the time of insertion. Save this library drawing with an appropriate name (e.g., GMLIB.dwg).

The "H" in the balloon, flag, and finish mark will be an attribute to allow for variable text.

"H" IN THE FOLLOWING BLOCKS IS 1 INCH

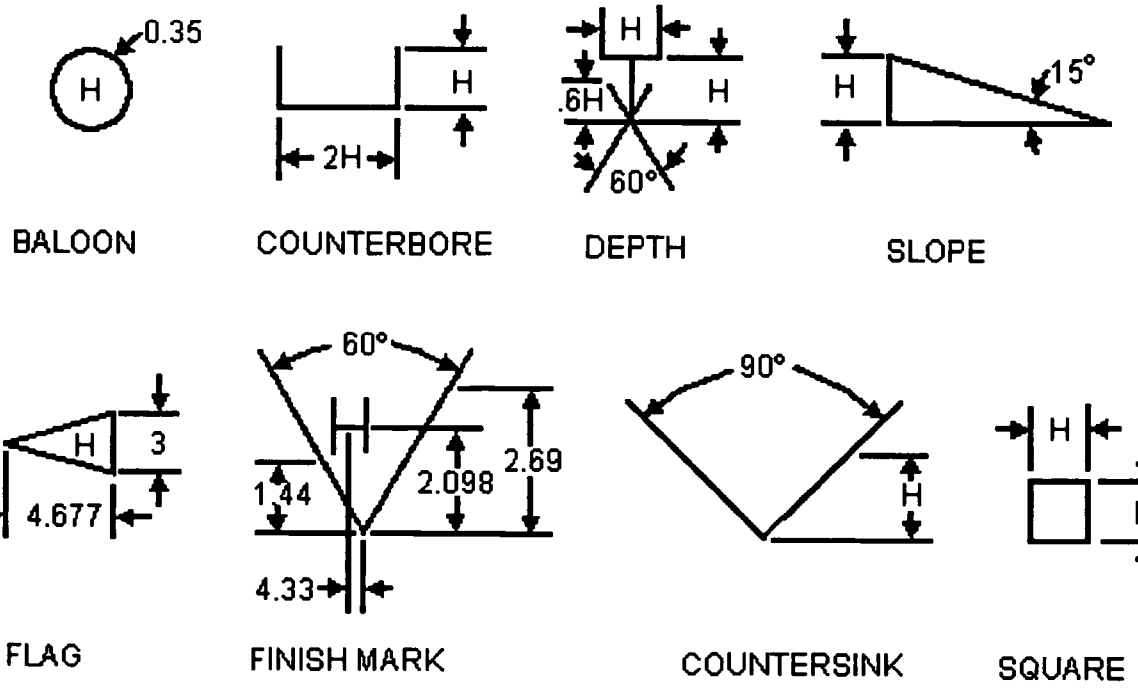

The parts list header appears below. Draw the header, including the text shown ,then block with an appropriate name. On an assembly drawing, this header will be placed at the top of the drawing to begin the parts list. Underneath the header, will appear each item in the parts assembly. Therefore, we need a second block to serve for each item. Using the frame size given in the header, create a "parts list item line" by assigning attributes to each column in the frame. As each parts list item line is inserted, the user will be prompted for information to fill the line. The user continues to insert these parts list item lines, until all parts in the assembly have been listed.

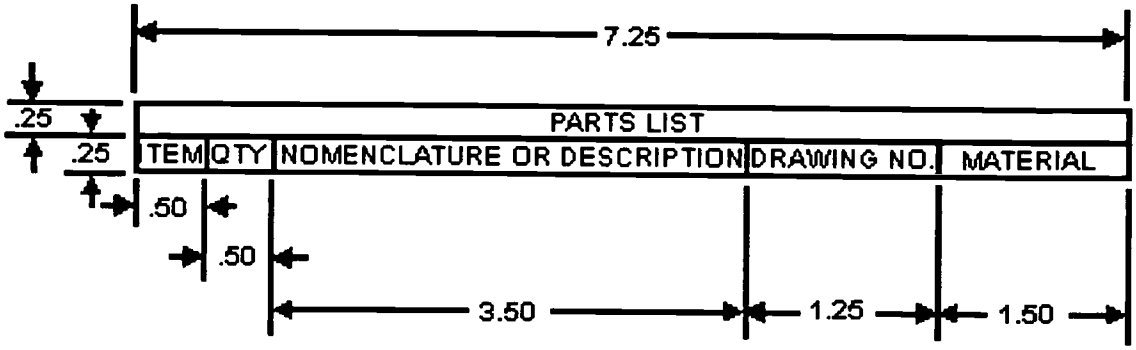

Laser Machinist .... apply the principles of electronics, lasers, optics, materials, engineering documentation, CAD/CAM, and systems integration to manufacture products following current industry and company standards.

Duties	Tasks												
A Practice Laser Safety	A-1 Discuss laser safety standards	A-2 Discuss basic laser principles	A-3 Discuss laser hazards	A-4 Discuss control measures									
B Apply Mathematical Concepts	B-1 Perform basic mathematical functions	B-2 Perform algebraic functions	B-3 Study exponents and right triangle geometry	B-4 Study elements of plane and solid geometry	B-5 Perform data evaluation and statistical analysis	B-6 Perform proportioning and interpolation	B-7 Perform basic trigonometric calculations	B-8 Investigate vectors and vector systems	B-9 Investigate the Cartesian Coordiante System				
C Perform Measurement and Inspection	C-1 Study basics of metrology	C-2 Select instruments used for measurement	C-3 Study datums and the three plane concept	C-4 Select gauging tools	C-5 Use CMM for location of features	C-6 Perform measurements for orientation tolerances	C-7 Perform measurment by optical comparison	C-8 Perform measurements for circularity, concentricity, runout, and straightness tolerances	C-9 Investigate advanced metrology topics				
D Troubleshoot Industrial Electronics and Control	D-1 Perform DC voltage, current, and power measurements	D-2 Perform AC voltage, current, and power measurements	D-3 Investigate digital logic systems	D-4 Investigate diode applications	D-5 Investigate transistors and thyristors	D-6 Investigate operational amplifiers	D-7 Investigate power supply circuits						
E Apply Concepts of Modern Optics	E-1 Study reflection and refraction at plane surfaces	E-2 Perform imaging with a single lens	E-3 Perform imaging with multiple lenses	E-4 Study F-stops and apertures	E-5 Use laser beam-expanding collimators	E-6 Study interference	E-7 Study diffraction	E-8 Study polarization	E-9 Investigate radiometry and photometry				
F Perform CNC Machining	F-1 Apply machine specific nomenclature and terminology	F-2 Investigate the Cartesian coordinate system as applied to a CNC mill or laser	F-3 Apply CNC programming language	F-4 Perform start up, tool changing, and ending of programs	F-5 Perform positioning and basic drilling	F-6 Create a sub-program	F-7 Perform contouring	F-8 Apply tool radius compensation	F-9 Perform program preparation	F-10 Apply special laser coding parameters			
G Investigate Industrial Laser Systems	G-1 Review characteristics of light	G-2 Investigate emission and absorption of light	G-3 Discuss optical cavities and laser modes	G-4 Discuss temporal characteristics of lasers	G-5 Investigate spatial characteristics of lasers	G-6 Discuss laser classifications and characteristics							
H Perform Computer-Aided Drafting (CAD)	H-1 Discuss and understand PC basics	H-2 Discuss CAD basics and file management	H-3 Use drawing settings	H-4 Perform basic editing commands	H-5 Create drawings with accuracy	H-6 Organize drawing information	H-7 Control the display of drawings	H-8 Use intermediate drawing commands	H-9 Perform intermediate editing commands	H-10 Create multi view drawings	H-11 Create sectioned drawings	H-12 Investigate basic dimensioning	H-13 Perform advanced dimensioning
	H-14 Use and manipulate blocks	H-15 Use blocks to automate the drawing process											
I Perform Laser Materials Processing	I-1 Review laser safety standards	I-2 Discuss lasers used for materials processing	I-3 Discuss laser optics and beam characteristics	I-4 Investigate absorption of laser energy	I-5 Use lasers for welding and surface treatment	I-6 Use lasers for material removal							
J Perform Computer-Aided Manufacturing (CAM)	J-1 Discuss and understand the basics of a PC based CAM system	J-2 Discuss basic CAM operations	J-3 Set up cutting tools	J-4 Create simple part profiles	J-5 Create and edit complex part profiles	J-6 Perform roughing, drilling, and counterboring	J-7 Advanced editing of part profiles	J-8 Edit tool paths	J-9 Use construction layers in SmartCAM	J-10 Perform user commands and machine events	J-11 Create families of parts	J-12 Perform CAD/CAM integration	J-13 Perform code generation

LSR PM6
040698

BEST COPY AVAILABLE

LASER MACHINING SERIES

MASTER Technical Module No. LSR-I1

Subject: **Laser Machining** **Time: 5 Hrs.**

Duty: **Perform Laser Materials Processing**
Task: Review Laser Safety Standards

Objective(s):

Upon completion of this unit the student will be able to:
a. Discuss ANSI-Z136.1 *Safe Use of Lasers*;
b. Discuss the LIA *Laser Safety Guide*; and,
c. Discuss LIA *Guide for the Selection of Laser Eye Protection.*

Instructional Materials:

ANSI-Z136.1 (1993), *Safe Use of Lasers*
LIA *Laser Safety Guide*
LIA *Guide for the Selection of Laser Eye Protection*
LIA *Laser Safety Comes to Light* video
MASTER Handout (LSR-I1-HO)
MASTER Laboratory Exercise (LSR-I1-LE)

References:

Introduction to Classical and Modern Optics, Meyer-Arendt, Jurgen R., Prentice Hall, Latest Edition
Light Sources and Wave Optics, CORD Communications, Laser Electro-Optics Series, Latest Edition
Introduction to Lasers, CORD Communications, Laser Electro-Optics Series, Latest Edition
ANSI-Z136.1 (1993), *Safe Use of Lasers,* Laser Institute of America, Publication No. 106, Latest Edition
Laser Safety Guide, Laser Institute of America, Publication No. 103, Latest Edition
Guide for the Selection of Laser Eye Protection, Laser Institute of America, Publication No. 104, Latest Edition
Video(s): *Introduction to Laser Safety and Laser Hazards* Video Training Module, Laser Institute of America, Publication No.115, Latest Edition
Laser Safety Comes to Light Video Training Module, Laser Institute of America, Publication No.116, Latest Edition

Student Preparation:

Students should have previously completed the following Technical Module:

LSR-A1 through LSR-A4	"Practice Laser Safety"
LSR-B1 through LSR-B9	"Apply Mathematical Concepts"
LSR-G1 through LSR-G6	"Investigate Industrial Laser Systems"

Introduction:

Developing an effective laser safety program is a critical component to any organization using lasers, whether used in education, industry, or research. Lasers pose serious hazards if not handled properly or if special precautions are not taken. The specific training requirements are a function of the type of laser used as well as the environment in which it is being used such as the laboratory, manufacturing, medical facility, retail establishment, or service environment. The laser industry is constantly changing, as are the requirements for protection. Laser safety standards on the safe use of lasers are processed and submitted to the American National Standards Institute (ANSI) by the Laser Institute of America (LIA) Z136. The scope of the committee covers protection against hazards associated with the use of lasers and optically radiating diodes. In this module, the student will review the ANSI Z136.1 standard for the safe use of lasers.

Presentation Outline:

I. Discuss Laser Safety Basics
   - A. Discuss the type of lasers used at (organization name)
   - B. Provide a brief explanation of the ANSI standards for laser safety
   - C. Discuss the LIA ***Laser Safety Guide***
   - D. Discuss LIA ***Guide for the Selection of Laser Eye Protection***
   - E. Show video ***Laser Safety Comes to Light***

Practical Application:

Students will observe and participate in the discussion of the topics listed above.

Evaluation and/or Verification:

Successful completion of this technical module will be based on the students' successful completion of the following components:

1. Describe the type of lasers used at (organization name);
2. Provide a brief explanation of the ANSI standards for laser safety;
3. Discuss the LIA ***Laser Safety Guide***; and,
4. Discuss LIA ***Guide for the Selection of Laser Eye Protection.***

Summary:

Review the main lesson points using the suggested texts listed in the reference section of this module. Hold class discussion and answer student questions.

Next Lesson Assignment:

MASTER Technical Module (LSR-I2) pertaining to lasers used for materials processing.

LSR-I1-HO
Review Laser Safety Standards
Attachment 1: **MASTER** Handout

Objective(s):

Upon completion of this unit the student will be able to:

a. Discuss ANSI-Z136.1 ***Safe Use of Lasers***;
b. Discuss the LIA ***Laser Safety Guide***; and,
c. Discuss LIA ***Guide for the Selection of Laser Eye Protection.***

Module Outline:

I. Discuss Laser Safety Basics
   A. Discuss the type of lasers used at (organization name)
   B. Provide a brief explanation of the ANSI standards for laser safety
   C. Discuss the LIA ***Laser Safety Guide***
   D. Discuss LIA ***Guide for the Selection of Laser Eye Protection***
   E. Show video ***Laser Safety Comes to Light***

LSR-I1-LE
Review Laser Safety Standards
Attachment 2: **MASTER** Laboratory Exercise

Successful completion of this technical module will be based on the students' successful completion of the following components:

1. Describe the type of lasers used at (organization name);
2. Provide a brief explanation of the ANSI standards for laser safety;
3. Discuss the LIA ***Laser Safety Guide***; and,
4. Discuss LIA ***Guide for the Selection of Laser Eye Protection.***

LASER MACHINING SERIES

MASTER Technical Module No. LSR-I2

Subject: Laser Machining **Time: 5 Hrs.**

Duty: Perform Laser Materials Processing
Task: Discuss Lasers Used for Materials Processing

Objective(s):

Upon completion of this unit the student will be able to:

a. Discuss basic elements of a laser;
b. Discuss laser characteristics;
c. Discuss current laser availability; and,
d. Discuss high-power materials processing lasers.

Instructional Materials:

Guide to Laser Materials Processing, Charschan, Sidney, S., LIA, CRC Press, Latest Edition
Lasers in Manufacturing video, Society of Manufacturing Engineers, Latest Edition
MASTER Handout (LSR-I2-HO)
MASTER Laboratory Exercise (LSR-I2-LE)

References:

Industrial Applications of Lasers, Ready, John, Academic Press, Latest Edition
Introduction to Classical and Modern Optics, Meyer-Arendt, Jurgen R., Prentice Hall, Latest Edition
Laser Applications, CORD Communications, Laser Electro-Optics Series, Latest Edition
Introduction to Lasers, CORD Communications, Laser Electro-Optics Series, Latest Edition
Guide to Laser Materials Processing, Charschan, Sidney, S., LIA, CRC Press, Latest Edition
Video(s): *Lasers in Manufacturing,* Society of Manufacturing Engineers, Latest Edition

Student Preparation:

Students should have previously completed the following Technical Module:

LSR-A1 through LSR-A4 "Practice Laser Safety"
LSR-B1 through LSR-B9 "Apply Mathematical Concepts"
LSR-E1 through LSR-E9 "Apply Concepts of Modern Optics"
LSR-G1 through LSR-G6 "Investigate Industrial Laser Systems"
LSR-I1 "Review Laser Safety Standards"

Introduction:

Lasers are being used in a multitude of different industries for applications ranging from materials processing to communications to medical applications. Lasers are generally characterized by its wavelength, output power level, mode of operation (cw or pulsed), and the duration of its output. A system that is suitable for a given application can be chosen on the basis of the characteristics of that laser system relative the specific requirements of the particular application. In this module, we will present a survey of the different types of lasers, their operating parameters, and some typical applications.

Presentation Outline:

I. Discuss Lasers Used for Materials Processing
  A. Discuss basic elements of a laser
    1. Electromagnetic radiation
    2. Generation of coherent optical energy
    3. Laser subsystems
  B. Discuss laser characteristics
    1. Laser operating parameters
    2. Temporal characteristics of lasers
    3. Spatial characteristics of lasers
  C. Discuss current laser availability
    1. Survey of commercially available lasers
    2. R&D lasers
  D. Discuss high-power materials processing lasers
    1. CO_2 lasers
      a. Resonator
      b. Excitation power source
      c. Beam power
      d. Beam quality
      e. Cost
    2. Nd:YAG lasers
      a. Resonator
      b. Excitation power source
      c. Beam power
      d. Beam quality
    3. Excimer lasers

a. Resonator
b. Excitation power source
c. Beam power
d. Beam quality

Practical Application:

Arrange an industry site visit to one or several companies involved in the use of lasers materials processing. Pay special attention to the types of lasers used, the output laser parameters, the types of materials being processed, lim
itations of the specific lasers, and the electrical and safety precautions used. If a field trip is not feasible, use the SME video series on Lasers in Manufacturing to demonstrate the many applications of lasers in industry.

Evaluation and/or Verification:

Successful completion of this technical module will be based on the students' successful completion of the following components:

I. Discuss Lasers Used for Materials Processing
   A. Discuss basic elements of a laser
      1. Electromagnetic radiation
      2. Generation of coherent optical energy
      3. Laser subsystems
   B. Discuss laser characteristics
      1. Laser operating parameters
      2. Temporal characteristics of lasers
      3. Spatial characteristics of lasers
   C. Discuss current laser availability
      1. Survey of commercially available lasers
      2. R&D lasers
   D. Discuss high-power materials processing lasers
      1. CO_2 lasers
         a. Resonator
         b. Excitation power source
         c. Beam power
         d. Beam quality
         e. Cost
      2. Nd:YAG lasers
         a. Resonator
         b. Excitation power source
         c. Beam power
         d. Beam quality
      3. Excimer lasers
         a. Resonator

b. Excitation power source
c. Beam power
d. Beam quality

Summary:

Review the main lesson points using the suggested texts listed in the reference section of this module. Hold class discussion and answer student questions.

Next Lesson Assignment:

MASTER Technical Module (LSR-I3) dealing with laser optics and beam characteristics.

LSR-I2-HO
Discuss Lasers Used for Materials Processing
Attachment 1: **MASTER** Handout

Objective(s):

Upon completion of this unit the student will be able to:

a. Discuss basic elements of a laser;
b. Discuss laser characteristics;
c. Discuss current laser availability; and,
d. Discuss high-power materials processing lasers.

Module Outline:

I. Discuss Lasers Used for Materials Processing
  A. Discuss basic elements of a laser
    1. Electromagnetic radiation
    2. Generation of coherent optical energy
    3. Laser subsystems
  B. Discuss laser characteristics
    1. Laser operating parameters
    2. Temporal characteristics of lasers
    3. Spatial characteristics of lasers
  C. Discuss current laser availability
    1. Survey of commercially available lasers
    2. R&D lasers
  D. Discuss high-power materials processing lasers
    1. CO_2 lasers
      a. Resonator
      b. Excitation power source
      c. Beam power
      d. Beam quality
      e. Cost
    2. Nd:YAG lasers
      a. Resonator
      b. Excitation power source
      c. Beam power
      d. Beam quality
    3. Excimer lasers
      a. Resonator
      b. Excitation power source
      c. Beam power
      d. Beam quality

LSR-I2-LE
Discuss Lasers Used for Materials Processing
Attachment 2: **MASTER** Laboratory Exercise

Successful completion of this technical module will be based on the students' successful completion of the following components:

I. Discuss Lasers Used for Materials Processing
  A. Discuss basic elements of a laser
    1. Electromagnetic radiation
    2. Generation of coherent optical energy
    3. Laser subsystems
  B. Discuss laser characteristics
    1. Laser operating parameters
    2. Temporal characteristics of lasers
    3. Spatial characteristics of lasers
  C. Discuss current laser availability
    1. Survey of commercially available lasers
    2. R&D lasers
  D. Discuss high-power materials processing lasers
    1. CO_2 lasers
      a. Resonator
      b. Excitation power source
      c. Beam power
      d. Beam quality
      e. Cost
    2. Nd:YAG lasers
      a. Resonator
      b. Excitation power source
      c. Beam power
      d. Beam quality
    3. Excimer lasers
      a. Resonator
      b. Excitation power source
      c. Beam power
      d. Beam quality

LASER MACHINING SERIES

MASTER Technical Module No. LSR-I3

Subject: Laser Machining **Time: 5 Hrs.**

Duty: Perform Laser Materials Processing
Task: Discuss Laser Optics and Beam Characteristics

Objective(s):

Upon completion of this unit the student will be able to:

a. Discuss the nature of laser beams;
b. Discuss transverse modes;
c. Discuss Gaussian beams;
d. Demonstrate an understanding of higher-order mode;
e. Demonstrate an understanding of focusing and depth of focus;
f. Demonstrate an understanding of focusing optics; and,
g. Discuss optical materials and beam delivery systems.

Instructional Materials:

Guide to Laser Materials Processing, Charschan, Sidney, S., LIA, CRC Press, Latest Edition
Lasers in Manufacturing video, Society of Manufacturing Engineers, Latest Edition
MASTER Handout (LSR-I3-HO)
MASTER Laboratory Exercise (LSR-I3-LE)

References:

Industrial Applications of Lasers, Ready, John, Academic Press, Latest Edition
Introduction to Classical and Modern Optics, Meyer-Arendt, Jurgen R., Prentice Hall, Latest Edition
Laser Applications, CORD Communications, Laser Electro-Optics Series, Latest Edition
Introduction to Lasers, CORD Communications, Laser Electro-Optics Series, Latest Edition
Guide to Laser Materials Processing, Charschan, Sidney, S., LIA, CRC Press, Latest Edition
Video(s): *Lasers in Manufacturing,* Society of Manufacturing Engineers, Latest Edition

Student Preparation:

Students should have previously completed the following Technical Module:

LSR-A1 through LSR-A4 "Practice Laser Safety"
LSR-B1 through LSR-B9 "Apply Mathematical Concepts"
LSR-G1 through LSR-G6 "Investigate Industrial Laser Systems"
LSR-I2 "Discuss Lasers Used for Materials Processing"

Introduction:

Lasers are being used in a multitude of different industries for applications ranging from materials processing to communications to medical applications. Lasers are generally characterized by its wavelength, output power level, mode of operation (cw or pulsed), and the duration of its output. A system that is suitable for a given application can be chosen on the basis of the characteristics of that laser system relative the specific requirements of the particular application. In this module we will investigate the nature of laser beams, how they propagate, their focusing behavior, and the characteristics of low- and high-order modes. We will also present information on optical materials and optics used for focusing laser beams for materials processing.

Presentation Outline:

I. Discuss Laser Optics and Beam Characteristics
   A. Discuss the nature of laser beams
   B. Discuss transverse modes
   C. Discuss Gaussian beams
   D. Demonstrate an understanding of higher-order mode
   E. Demonstrate an understanding of focusing and depth of focus
   F. Demonstrate an understanding of focusing optics
   G. Discuss optical materials and beam delivery systems

Practical Application:

Students will observe and participate in the discussion of the topics listed above.

Evaluation and/or Verification:

Successful completion of this technical module will be based on the students' successful completion of the following components:

I. Discuss Laser Optics and Beam Characteristics;
   1. Demonstrate an understanding of nature of laser beams;
   2. Demonstrate an understanding of transverse modes;
   3. Demonstrate an understanding of Gaussian beams;

4. Demonstrate an understanding of higher-order mode;
5. Demonstrate an understanding of focusing and depth of focus;
6. Demonstrate an understanding of focusing optics; and,
7. Demonstrate an understanding of optical materials and beam delivery systems.

Summary:

Review the main lesson points using the suggested texts listed in the reference section of this module. Hold class discussion and answer student questions.

Next Lesson Assignment:

MASTER Technical Module (LSR-I4) dealing with absorption of laser energy.

LSR-I3-HO
Discuss Laser Optics and Beam Characteristics
Attachment 1: **MASTER** Handout

Objective(s):

Upon completion of this unit the student will be able to:

a. Discuss the nature of laser beams;
b. Discuss transverse modes;
c. Discuss Gaussian beams;
d. Demonstrate an understanding of higher-order mode;
e. Demonstrate an understanding of focusing and depth of focus;
f. Demonstrate an understanding of focusing optics; and,
g. Discuss optical materials and beam delivery systems.

Module Outline:

I. Discuss Laser Optics and Beam Characteristics
   A. Discuss the nature of laser beams
   B. Discuss transverse modes
   C. Discuss Gaussian beams
   D. Demonstrate an understanding of higher-order mode
   E. Demonstrate an understanding of focusing and depth of focus
   F. Demonstrate an understanding of focusing optics
   G. Discuss optical materials and beam delivery systems

LSR-I3-LE
Discuss Laser Optics and Beam Characteristics
Attachment 2: **MASTER** Laboratory Exercise

Successful completion of this technical module will be based on the students' successful completion of the following components:

I. Discuss Laser Optics and Beam Characteristics;
   1. Demonstrate an understanding of nature of laser beams;
   2. Demonstrate an understanding of transverse modes;
   3. Demonstrate an understanding of Gaussian beams;
   4. Demonstrate an understanding of higher-order mode;
   5. Demonstrate an understanding of focusing and depth of focus;
   6. Demonstrate an understanding of focusing optics; and,
   7. Demonstrate an understanding of optical materials and beam delivery systems.

LASER MACHINING SERIES

MASTER Technical Module No. LSR-I4

Subject: Laser Machining **Time: 5 Hrs.**

Duty: Perform Laser Materials Processing
Task: Investigate Absorption of Laser Energy

Objective(s):

Upon completion of this unit the student will be able to:

a. Discuss the absorption process;
b. Discuss thermal properties of materials;
c. Discuss Thermodynamic properties of materials;
d. Discuss melting and vaporization;
e. Discuss plasma effects;
f. Discuss the effects of surface reflectivity; and,
g. Investigate the regimes of laser parameters for specific applications.

Instructional Materials:

Guide to Laser Materials Processing, Charschan, Sidney, S., LIA, CRC Press, Latest Edition
Lasers in Manufacturing video, Society of Manufacturing Engineers, Latest Edition
MASTER Handout (LSR-I4-HO)
MASTER Laboratory Exercise (LSR-I4-LE)

References:

Industrial Applications of Lasers, Ready, John, Academic Press, Latest Edition
Introduction to Classical and Modern Optics, Meyer-Arendt, Jurgen R., Prentice Hall, Latest Edition
Laser Applications, CORD Communications, Laser Electro-Optics Series, Latest Edition
Introduction to Lasers, CORD Communications, Laser Electro-Optics Series, Latest Edition
Guide to Laser Materials Processing, Charschan, Sidney, S., LIA, CRC Press, Latest Edition
Video(s): *Lasers in Manufacturing,* Society of Manufacturing Engineers, Latest Edition

Student Preparation:

Students should have previously completed the following Technical Module:

LSR-A1 through LSR-A4 "Practice Laser Safety"
LSR-B1 through LSR-B9 "Apply Mathematical Concepts"
LSR-G1 through LSR-G6 "Investigate Industrial Laser Systems"
LSR-I3 "Discuss Laser Optics and Beam Characteristics"

Introduction:

Lasers are being used in a multitude of different industries for applications ranging from materials processing to communications to medical applications. Lasers are generally characterized by its wavelength, output power level, mode of operation (cw or pulsed), and the duration of its output. A system that is suitable for a given application can be chosen on the basis of the characteristics of that laser system relative the specific requirements of the particular application. In this module, we will investigate the interaction of laser light with a material to be processed. In this interaction, the laser energy is absorbed by the target and is converted to heat within the target. The most important properties of the target which will be discussed are: light absorption properties, thermal transport properties, and thermodynamic properties.

Presentation Outline:

I. Discuss the Absorption of Laser Energy
   - A. Discuss the absorption process
     1. Irradiance
     2. Exponential absorption law
     3. Absorption coefficient
   - B. Discuss thermal properties of materials
     1. Heat flow into a material
     2. Specific heat of a material
     3. Thermal diffusivity
     4. Depth of penetration
     5. Thermal time constant
   - C. Discuss Thermodynamic properties of materials
     1. Heat capacity
     2. Latent heat of fusion
     3. Latent heat of vaporization
     4. Thermodynamic properties of metals
     5. Melting and vaporization approximation using the energy balance model
   - D. Discuss melting and vaporization
   - E. Discuss plasma effects

F. Discuss the effects of surface reflectivity
G. Investigate the regimes of laser parameters for specific applications
    1. Melting
    2. Vaporization
    3. LSA wave generation
    4. Plasma collective effects

Practical Application:

Students will observe and participate in the discussion of the topics listed above.

Evaluation and/or Verification:

Successful completion of this technical module will be based on the students' successful completion of the following components:

I. Discuss the Absorption of Laser Energy
    A. Discuss the absorption process
        1. Irradiance
        2. Exponential absorption law
        3. Absorption coefficient
    B. Discuss thermal properties of materials
        1. Heat flow into a material
        2. Specific heat of a material
        3. Thermal diffusivity
        4. Depth of penetration
        5. Thermal time constant
    C. Discuss Thermodynamic properties of materials
        1. Heat capacity
        2. Latent heat of fusion
        3. Latent heat of vaporization
        4. Thermodynamic properties of metals
        5. Melting and vaporization approximation using the energy balance model
    D. Discuss melting and vaporization
    E. Discuss plasma effects
    F. Discuss the effects of surface reflectivity
    G. Investigate the regimes of laser parameters for specific applications
        1. Melting
        2. Vaporization
        3. LSA wave generation
        4. Plasma collective effects

Summary:

Review the main lesson points using the suggested texts listed in the reference section of this module. Hold class discussion and answer student questions.

Next Lesson Assignment:

MASTER Technical Module (LSR-I5) dealing with laser welding and surface treatment.

LSR-I4-HO
Investigate Absorption of Laser Energy
Attachment 1: **MASTER** Handout

Objective(s):

Upon completion of this unit the student will be able to:

a. Discuss the absorption process;
b. Discuss thermal properties of materials;
c. Discuss Thermodynamic properties of materials;
d. Discuss melting and vaporization;
e. Discuss plasma effects;
f. Discuss the effects of surface reflectivity; and,
g. Investigate the regimes of laser parameters for specific applications.

Module Outline:

I. Discuss the Absorption of Laser Energy
  A. Discuss the absorption process
    1. Irradiance
    2. Exponential absorption law
    3. Absorption coefficient
  B. Discuss thermal properties of materials
    1. Heat flow into a material
    2. Specific heat of a material
    3. Thermal diffusivity
    4. Depth of penetration
    5. Thermal time constant
  C. Discuss Thermodynamic properties of materials
    1. Heat capacity
    2. Latent heat of fusion
    3. Latent heat of vaporization
    4. Thermodynamic properties of metals
    5. Melting and vaporization approximation using the energy balance model
  D. Discuss melting and vaporization
  E. Discuss plasma effects
  F. Discuss the effects of surface reflectivity
  G. Investigate the regimes of laser parameters for specific applications
    1. Melting
    2. Vaporization
    3. LSA wave generation
    4. Plasma collective effects

Successful completion of this technical module will be based on the students' successful completion of the following components:

I. Discuss the Absorption of Laser Energy
   - A. Discuss the absorption process
     1. Irradiance
     2. Exponential absorption law
     3. Absorption coefficient
   - B. Discuss thermal properties of materials
     1. Heat flow into a material
     2. Specific heat of a material
     3. Thermal diffusivity
     4. Depth of penetration
     5. Thermal time constant
   - C. Discuss Thermodynamic properties of materials
     1. Heat capacity
     2. Latent heat of fusion
     3. Latent heat of vaporization
     4. Thermodynamic properties of metals
     5. Melting and vaporization approximation using the energy balance model
   - D. Discuss melting and vaporization
   - E. Discuss plasma effects
   - F. Discuss the effects of surface reflectivity
   - G. Investigate the regimes of laser parameters for specific applications
     1. Melting
     2. Vaporization
     3. LSA wave generation
     4. Plasma collective effects

LASER MACHINING SERIES

MASTER Technical Module No. LSR-I5

Subject: Laser Machining **Time: 5 Hrs.**

Duty: Perform Laser Materials Processing
Task: Use Lasers for Welding and Surface Treatment

Objective(s):

Upon completion of this unit the student will be able to:

a. Discuss the advantages and limitations of laser welding;
b. List typical lasers suitable for welding;
c. Discuss elements of a laser welding system;
d. Determine the spot size and irradiance of a typical laser focusing system;
e. Describe the importance of thermal diffusivity and reflectivity of the workpiece;
f. Calculate the depth of penetration of heat into a metal;
g. Discuss the relative laser weldability of various materials; and,
h. Describe laser surface heat treating.

Instructional Materials:

Laser Applications, CORD Communications, Laser Electro-Optics Series, Latest Edition
Lasers in Manufacturing video, Society of Manufacturing Engineers, Latest Edition
MASTER Handout (LSR-I5-HO)
MASTER Laboratory Exercise (LSR-I5-LE)

References:

Industrial Applications of Lasers, Ready, John, Academic Press, Latest Edition
Introduction to Classical and Modern Optics, Meyer-Arendt, Jurgen R., Prentice Hall, Latest Edition
Laser Applications, CORD Communications, Laser Electro-Optics Series, Latest Edition
Introduction to Lasers, CORD Communications, Laser Electro-Optics Series, Latest Edition
Guide to Laser Materials Processing, Charschan, Sidney, S., LIA, CRC Press, Latest Edition

Video(s): *Lasers in Manufacturing*, Society of Manufacturing Engineers, Latest Edition

Student Preparation:

Students should have previously completed the following Technical Module:

LSR-A1 through LSR-A4 "Practice Laser Safety"
LSR-B1 through LSR-B9 "Apply Mathematical Concepts"
LSR-G1 through LSR-G6 "Investigate Industrial Laser Systems"
LSR-I4 "Investigate Absorption of Laser Energy"

Introduction:

High-power lasers have the ability to be focused to very small areas with enough power to melt and even vaporize metal. In laser welding, the goal is to control the amount of energy delivered to a workpiece so that the desired result is achieved. Too much power will vaporize the metal; not enough power and melting may not be achieved.

The most common lasers found in laser welding applications are the continuous wave (CW) CO_2 and Nd:YAG lasers, whereas, pulsed ruby and Nd:glass lasers can be used for spot welding. CW lasers with modest powers (500-1000 watts) will weld thin materials at reasonably high rates. Multi kilowatt lasers can be used to weld thicker metals, up to 1 inch thick.

Lasers can also be used to modify the surface characteristics of materials. Laser surface treatment can lead to hardened layers of material at the surface of a workpiece. This increases hardness and improves wear-resistance of the treated surface area. In this module we will introduce the applications of laser welding and laser based surface treatment.

Presentation Outline:

I. Discuss Laser Welding and Surface Modification
   A. Discuss the advantages and limitations of laser welding
   B. List typical lasers suitable for welding
   C. Discuss elements of a laser welding system
   D. Determine the spot size and irradiance of a typical laser focusing system
   E. Describe the importance of thermal diffusivity and reflectivity of the workpiece
   F. Calculate the depth of penetration of heat into a metal
   G. Discuss the relative laser weldability of various materials
   H. Describe laser surface heat treating
   I. Discuss Rockwell Hardness testing

Practical Application:

Students will perform experiments on "Laser Welding and Surface Treatment" as detailed in *Laser Applications,* CORD Communications, Latest Edition.

Evaluation and/or Verification:

Successful completion of this technical module will be based on the students' successful completion of the following components:

I. Discuss Laser Welding and Surface Modification
   - A. Discuss the advantages and limitations of laser welding
   - B. List typical lasers suitable for welding
   - C. Discuss elements of a laser welding system
   - D. Determine the spot size and irradiance of a typical laser focusing system
   - E. Describe the importance of thermal diffusivity and reflectivity of the workpiece
   - F. Calculate the depth of penetration of heat into a metal
   - G. Discuss the relative laser weldability of various materials
   - H. Describe laser surface heat treating
   - I. Discuss Rockwell Hardness testing

Summary:

Review the main lesson points using the suggested texts listed in the reference section of this module. Hold class discussion and answer student questions.

Next Lesson Assignment:

MASTER Technical Module (LSR-I6) dealing with laser material removal.

LSR-I5-HO
Use Lasers for Welding and Surface Treatment
Attachment 1: **MASTER** Handout

Objective(s):

Upon completion of this unit the student will be able to:

a. Discuss the advantages and limitations of laser welding;
b. List typical lasers suitable for welding;
c. Discuss elements of a laser welding system;
d. Determine the spot size and irradiance of a typical laser focusing system;
e. Describe the importance of thermal diffusivity and reflectivity of the workpiece;
f. Calculate the depth of penetration of heat into a metal;
g. Discuss the relative laser weldability of various materials; and,
h. Describe laser surface heat treating.

Module Outline:

I. Discuss Laser Welding and Surface Modification
   A. Discuss the advantages and limitations of laser welding
   B. List typical lasers suitable for welding
   C. Discuss elements of a laser welding system
   D. Determine the spot size and irradiance of a typical laser focusing system
   E. Describe the importance of thermal diffusivity and reflectivity of the workpiece
   F. Calculate the depth of penetration of heat into a metal
   G. Discuss the relative laser weldability of various materials
   H. Describe laser surface heat treating
   I. Discuss Rockwell Hardness testing

Successful completion of this technical module will be based on the students' successful completion of the following components:

I. Discuss Laser Welding and Surface Modification
   - A. Discuss the advantages and limitations of laser welding
   - B. List typical lasers suitable for welding
   - C. Discuss elements of a laser welding system
   - D. Determine the spot size and irradiance of a typical laser focusing system
   - E. Describe the importance of thermal diffusivity and reflectivity of the workpiece
   - F. Calculate the depth of penetration of heat into a metal
   - G. Discuss the relative laser weldability of various materials
   - H. Describe laser surface heat treating
   - I. Discuss Rockwell Hardness testing

LASER MACHINING SERIES

MASTER Technical Module No. LSR-I6

Subject: Laser Machining **Time: 5 Hrs.**

Duty: Perform Laser Materials Processing
Task: Use Lasers for Material Removal

Objective(s):

Upon completion of this unit the student will be able to:

a. Calculate power density of a focused laser beam;
b. Discuss typical laser systems used for material removal;
c. Determine thermal properties of workpiece material necessary for vaporization;
d. Discuss practical applications of laser hole drilling;
e. Discuss practical applications of laser cutting;
f. Discuss practical applications of laser scribing; and,
g. Discuss practical applications of laser marking.

Instructional Materials:

Laser Applications, CORD Communications, Laser Electro-Optics Series, Latest Edition
Lasers in Manufacturing video, Society of Manufacturing Engineers, Latest Edition
MASTER Handout (LSR-I6-HO)
MASTER Laboratory Exercise (LSR-I6-LE)

References:

Industrial Applications of Lasers, Ready, John, Academic Press, Latest Edition
Introduction to Classical and Modern Optics, Meyer-Arendt, Jurgen R., Prentice Hall, Latest Edition
Laser Applications, CORD Communications, Laser Electro-Optics Series, Latest Edition
Introduction to Lasers, CORD Communications, Laser Electro-Optics Series, Latest Edition
Guide to Laser Materials Processing, Charschan, Sidney, S., LIA, CRC Press, Latest Edition
Video(s): *Lasers in Manufacturing,* Society of Manufacturing Engineers, Latest Edition

Student Preparation:

Students should have previously completed the following Technical Module:

LSR-A1 through LSR-A4 "Practice Laser Safety"
LSR-B1 through LSR-B9 "Apply Mathematical Concepts"
LSR-G1 through LSR-G6 "Investigate Industrial Laser Systems"
LSR-I5 "Use Lasers for Welding and Surface Treatment"

Introduction:

The high-power beam from a laser can be focused to a very small spot resulting in very high power densities. If this power density is high enough, vaporization of material is possible in a very short time period. Thus, lasers can be used for cutting and drilling. Lasers are very useful in applications where conventional machining is either impractical or impossible, such as, drilling very small holes in hard material or along contoured surfaces, cutting sheet metal with complex patterns, cutting nylon fabric with fraying of the edges, or precision trimming of resistors in the electronics industry. In this module, we will examine the practical applications lasers used in cutting, drilling, marking and etching, and scribing.

Presentation Outline:

I. Discuss Laser Welding and Surface Modification
   A. Calculate power density of a focused laser beam
   B. Discuss typical laser systems used for material removal
      1. Ruby
      2. Nd:YAG (pulsed and CW)
      3. Nd:glass
      4. CO_2 (pulsed and CW)
   C. Determine thermal properties of workpiece material necessary for vaporization
      1. Vaporization time for various metals
      2. Vaporization depth vs. exposure time
      3. Relationship between hole depth and number of pulses
   D. Discuss practical applications of laser hole drilling
   E. Discuss practical applications of laser cutting
   F. Discuss practical applications of laser scribing
   G. Discuss practical applications of laser marking

Practical Application:

Students will perform experiments on "Lasers for Materials Removal" as detailed in ***Laser Applications***, CORD Communications, Latest Edition.

Evaluation and/or Verification:

Successful completion of this technical module will be based on the students' successful completion of the following components:

I. Discuss Laser Welding and Surface Modification
   - A. Calculate power density of a focused laser beam
   - B. Discuss typical laser systems used for material removal
     1. Ruby
     2. Nd:YAG (pulsed and CW)
     3. Nd:glass
     4. CO_2 (pulsed and CW)
   - C. Determine thermal properties of workpiece material necessary for vaporization
     1. Vaporization time for various metals
     2. Vaporization depth vs. exposure time
     3. Relationship between hole depth and number of pulses
   - D. Discuss practical applications of laser hole drilling
   - E. Discuss practical applications of laser cutting
   - F. Discuss practical applications of laser scribing
   - G. Discuss practical applications of laser marking

Summary:

Review the main lesson points using the suggested texts listed in the reference section of this module. Hold class discussion and answer student questions.

Next Lesson Assignment:

MASTER Technical Module (LSR-J1) dealing with understanding the basics of a PC based CAM system.

LSR-I6-HO
Use Lasers for Material Removal
Attachment 1: **MASTER** Handout

Objective(s):

Upon completion of this unit the student will be able to:

a. Calculate power density of a focused laser beam;
b. Discuss typical laser systems used for material removal;
c. Determine thermal properties of workpiece material necessary for vaporization;
d. Discuss practical applications of laser hole drilling;
e. Discuss practical applications of laser cutting;
f. Discuss practical applications of laser scribing; and,
g. Discuss practical applications of laser marking.

Module Outline:

I. Discuss Laser Welding and Surface Modification
   A. Calculate power density of a focused laser beam
   B. Discuss typical laser systems used for material removal
      1. Ruby
      2. Nd:YAG (pulsed and CW)
      3. Nd:glass
      4. CO_2 (pulsed and CW)
   C. Determine thermal properties of workpiece material necessary for vaporization
      1. Vaporization time for various metals
      2. Vaporization depth vs. exposure time
      3. Relationship between hole depth and number of pulses
   D. Discuss practical applications of laser hole drilling
   E. Discuss practical applications of laser cutting
   F. Discuss practical applications of laser scribing
   G. Discuss practical applications of laser marking

Successful completion of this technical module will be based on the students' successful completion of the following components:

I. Discuss Laser Welding and Surface Modification
   - A. Calculate power density of a focused laser beam
   - B. Discuss typical laser systems used for material removal
     1. Ruby
     2. Nd:YAG (pulsed and CW)
     3. Nd:glass
     4. CO_2 (pulsed and CW)
   - C. Determine thermal properties of workpiece material necessary for vaporization
     1. Vaporization time for various metals
     2. Vaporization depth vs. exposure time
     3. Relationship between hole depth and number of pulses
   - D. Discuss practical applications of laser hole drilling
   - E. Discuss practical applications of laser cutting
   - F. Discuss practical applications of laser scribing
   - G. Discuss practical applications of laser marking

Laser Machinist .... apply the principles of electronics, lasers, optics, materials, engineering documentation, CAD/CAM, and systems integration to manufacture products following current industry and company standards.

Duties	Tasks												
A Practice Laser Safety	A-1 Discuss laser safety standards	A-2 Discuss basic laser principles	A-3 Discuss laser hazards	A-4 Discuss control measures									
B Apply Mathematical Concepts	B-1 Perform basic mathematical functions	B-2 Perform algebraic functions	B-3 Study exponents and right triangle geometry	B-4 Study elements of plane and solid geometry	B-5 Perform data evaluation and statistical analysis	B-6 Perform proportioning and interpolation	B-7 Perform basic trigonometric calculations	B-8 Investigate vectors and vector systems	B-9 Investigate the Cartesian Coordiante System				
C Perform Measurement and Inspection	C-1 Study basics of metrology	C-2 Select instruments used for measurement	C-3 Study datums and the three plane concept	C-4 Select gauging tools	C-5 Use CMM for location of features	C-6 Perform measurements for orientation tolerances	C-7 Perform measurment by optical comparison	C-8 Perform measurements for circularity, concentricity, runout, and straightness tolerances	C-9 Investigate advanced metrology topics				
D Troubleshoot Industrial Electronics and Control	D-1 Perform DC voltage, current, and power measurements	D-2 Perform AC voltage, current, and power measurements	D-3 Investigate digital logic systems	D-4 Investigate diode applications	D-5 Investigate transistors and thyristors	D-6 Investigate operational amplifiers	D-7 Investigate power supply circuits						
E Apply Concepts of Modern Optics	E-1 Study reflection and refraction at plane surfaces	E-2 Perform imaging with a single lens	E-3 Perform imaging with multiple lenses	E-4 Study F-stops and apertures	E-5 Use laser beam-expanding collimators	E-6 Study interference	E-7 Study diffraction	E-8 Study polarization	E-9 Investigate radiometry and photometry				
F Perform CNC Machining	F-1 Apply machine specific nomenclature and terminology	F-2 Investigate the Cartesian coordinate system as applied to a CNC mill or laser	F-3 Apply CNC programming language	F-4 Perform start up, tool changing, and ending of programs	F-5 Perform positioning and basic drilling	F-6 Create a sub-program	F-7 Perform contouring	F-8 Apply tool radius compensation	F-9 Perform program preparation	F-10 Apply special laser coding parameters			
G Investigate Industrial Laser Systems	G-1 Review characteristics of light	G-2 Investigate emission and absorption of light	G-3 Discuss optical cavities and laser modes	G-4 Discuss temporal characteristics of lasers	G-5 Investigate spatial characteristics of lasers	G-6 Discuss laser classifications and characteristics							
H Perform Computer-Aided Drafting (CAD)	H-1 Discuss and understand PC basics	H-2 Discuss CAD basics and file management	H-3 Use drawing settings	H-4 Perform basic editing commands	H-5 Create drawings with accuracy	H-6 Organize drawing information	H-7 Control the display of drawings	H-8 Use intermediate drawing commands	H-9 Perform intermediate editing commands	H-10 Create multi view drawings	H-11 Create sectioned drawings	H-12 Investigate basic dimensioning	H-13 Perform advanced dimensioning
	H-14 Use and manipulate blocks	H-15 Use blocks to automate the drawing process											
I Perform Laser Materials Processing	I-1 Review laser safety standards	I-2 Discuss lasers used for materials processing	I-3 Discuss laser optics and beam characteristics	I-4 Investigate absorption of laser energy	I-5 Use lasers for welding and surface treatment	I-6 Use lasers for material removal							
J Perform Computer-Aided Manufacturing (CAM)	J-1 Discuss and understand the basics of a PC based CAM system	J-2 Discuss basic CAM operations	J-3 Set up cutting tools	J-4 Create simple part profiles	J-5 Create and edit complex part profiles	J-6 Perform roughing, drilling, and counterboring	J-7 Advanced editing of part profiles	J-8 Edit tool paths	J-9 Use construction layers in SmartCAM	J-10 Perform user commands and machine events	J-11 Create families of parts	J-12 Perform CAD/CAM integration	J-13 Perform code generation

LSR PM4
040698

BEST COPY AVAILABLE

Duty1

LASER MACHINING SERIES

MASTER Technical Module No. LSR-J1

Subject: **Laser Machining** **Time: 2 Hrs.**

Duty: **Perform Computer-Aided Manufacturing (CAM)**
Task: Discuss and Understand the Basics of a PC Based CAM System

Note: SmartCAM® is being used as a typical CAM system.

Objective(s):

Upon completion of this unit the student will be able to:

a. Demonstrate an understanding of the SmartCAM® graphical users interface (GUI); and,
b. Discuss how CNC and CAM relate.

Instructional Materials:

SmartCAM® milling and/or fabrication software Version 8 or higher
486 DX2 or Pentium computer (IBM compatible) with SVGA monitor
MASTER Handout No. 1 (LSR-J1-HO1)
MASTER Handout No. 2 (LSR-J1-HO2) (SmartCAM's CNC Process Model)
MASTER Laboratory Exercise (LSR-J1-LE)

References:

Getting Started with SmartCAM® Milling, CAMAX Manufacturing Technologies, Latest Edition
SmartCAM® Milling Training Manual, CAMAX Manufacturing Technologies, Latest Edition
SmartCAM® Customization Manual for Microsoft® Windows™, CAMAX Manufacturing Technologies, Latest Edition
CNC Process Modeling using SmartCAM, Lin, Dr. S. C., et. al., Scholars International Publishing Corp., Latest Edition

Student Preparation:

Students should have previously completed the following Technical Modules:
LSR-F1 through LSR-F10 "Perform CNC Machining"

Introduction:

CAM programming involves an understanding of machining, computers, materials, and part processing. SmartCAM® utilizes a concept called "The CNC Process Model" which incorporates the creation of part geometry as tool paths and allows for change and interaction with the model. The path of the cutting tool can be viewed at any time in any number of viewing angles. Once the geometry and order of operation are complete, CNC code is generated to a file and downloaded to the machine. This code is in compliance with the specific machine on which the part will be manufactured. SmartCAM® has the capability of generating code for any computer controlled machine provided that the necessary code generator files have been either created by the user or purchased from CAMAX. In this module, the student will demonstrate an understanding of the terminology and nomenclature used for a typical PC based CAM system (SmartCAM®).

Presentation Outline:

I. Discuss and Understand the Basics of a PC Based CAM System
   - A. Discuss CNC basics
   - B. Study SmartCAM® screen layout
   - C. Change the screen layout
   - D. Determine how CNC and CAM relate
   - E. Investigate basic SmartCAM® features

Practical Application:

Students will observe and participate in the discussion of the topics listed above. Following the demonstrations, students will complete projects assigned by the instructor.

Evaluation and/or Verification:

Successful completion of this technical module will be based on the students' successful completion of the following components:

a. Discuss CNC basics;
b. Discuss and use the SmartCAM screen layout;
c. Discuss how to change the screen layout;
d. Discuss how CNC and CAM relate; and,
e. Perform basic SmartCAM commands.

Summary:

Review the main lesson points using the suggested text(s) listed in the reference section of this module. Hold class discussion and answer student questions.

Next Lesson Assignment:

MASTER Technical Module (LSR-J2) pertaining to the discussion of basic CAM operations.

LSR-J1-HO1
Discuss and Understand the Basics of a PC Based CAM System
Attachment 1: **MASTER** Handout No. 1

Objective(s):

Upon completion of this unit the student will be able to:

a. Demonstrate an understanding of the SmartCAM® graphical users interface (GUI); and,
b. Discuss how CNC and CAM relate.

Module Outline:

I. Discuss and Understand the Basics of a PC Based CAM System
   A. Discuss CNC basics
   B. Study SmartCAM® screen layout
   C. Change the screen layout
   D. Determine how CNC and CAM relate
   E. Investigate basic SmartCAM® features

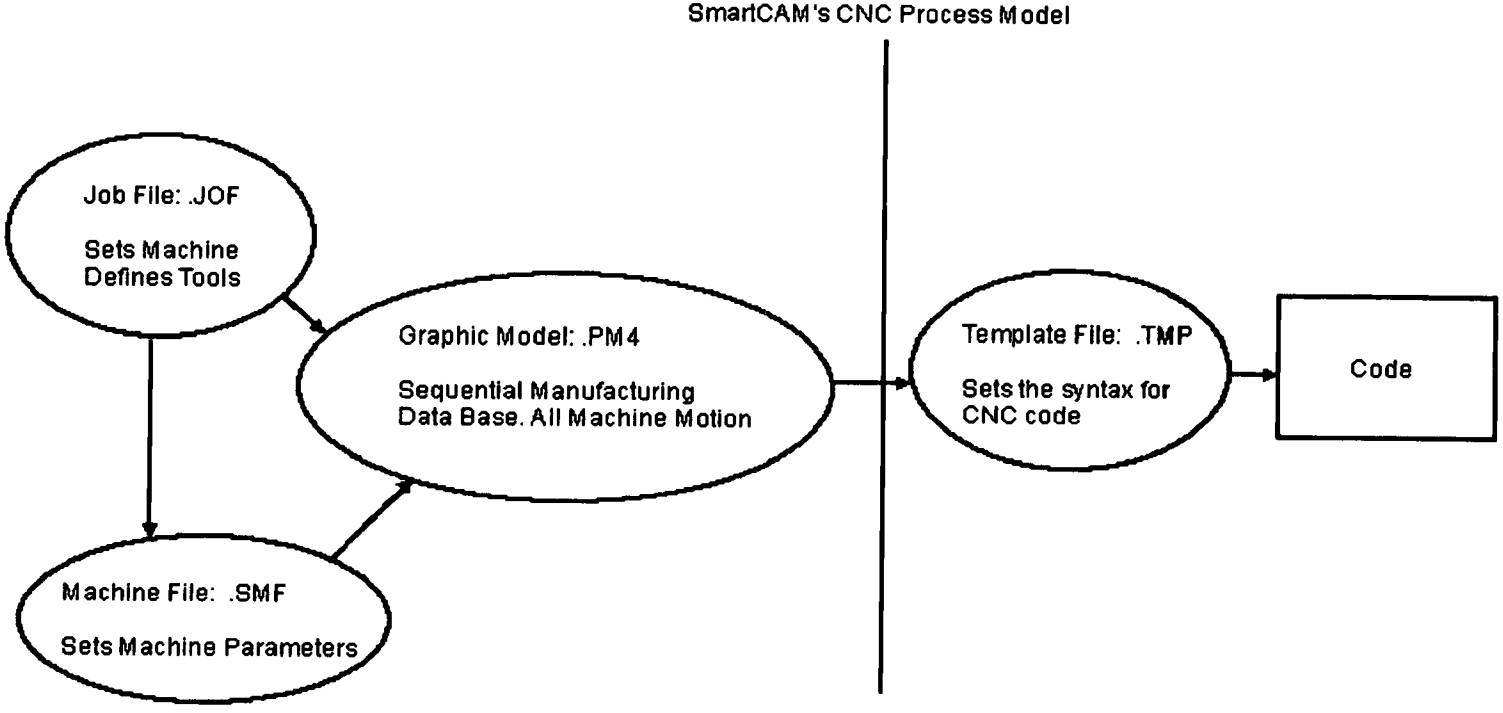
SmartCAM's CNC Process Model
Job File: .JOF
Sets Machine
Defines Tools
Graphic Model: .PM4
Sequential Manufacturing
Data Base. All Machine Motion
Machine File: .SMF
Sets Machine Parameters
Template File: .TMP
Sets the syntax for
CNC code
Code

LSR-J1-LE
Discuss and Understand the Basics of a PC Based CAM System
Attachment 3: **MASTER** Laboratory Exercise

Successful completion of this technical module will be based on the students' successful completion of the following components:

a. Discuss CNC basics;
b. Discuss and use the SmartCAM screen layout;
c. Discuss how to change the screen layout;
d. Discuss how CNC and CAM relate; and,
e. Perform basic SmartCAM commands.

LASER MACHINING SERIES

MASTER Technical Module No. LSR-J2

Subject: **Laser Machining** **Time: 2 Hrs.**

Duty: **Perform Computer-Aided Manufacturing (CAM)**
Task: Discuss Basic CAM Operations

Note: SmartCAM® is being used as a typical CAM system.

Objective(s):

Upon completion of this unit the student will be able to:
a. Demonstrate an understanding of the SmartCAM® job plan concept;
b. Discuss the file structure in SmartCAM®; and,
c. Discuss the difference between tools and layers.

Instructional Materials:

SmartCAM® milling and/or fabrication software Version 8 or higher
486 DX2 or Pentium computer (IBM compatible) with SVGA monitor
MASTER Handout (LSR-J2-HO)
MASTER Laboratory Exercise (LSR-J2-LE)

References:

Getting Started with SmartCAM® Milling, CAMAX Manufacturing Technologies, Latest Edition
Getting Started with SmartCAM® Advanced Fabrication, CAMAX Manufacturing Technologies, Latest Edition
SmartCAM® Milling Training Manual, CAMAX Manufacturing Technologies, Latest Edition
CNC Process Modeling using SmartCAM, Lin, Dr. S. C., et. al., Scholars International Publishing Corp., Latest Edition

Student Preparation:

Students should have previously completed the following Technical Modules:
LSR-J1 "Discuss and Understand the Basics of a PC Based CAM System"

Introduction:

CAM programming involves an understanding of machining, computers, materials, and part processing. SmartCAM® utilizes a concept called "The CNC Process Model" which incorporates the creation of part geometry as tool paths and allows for change and interaction with the model. The path of the cutting tool can be viewed at any time in any number of viewing angles. Once the geometry and order of operation are complete, CNC code is generated to a file and downloaded to the machine. This code is in compliance with the specific machine on which the part will be manufactured. SmartCAM® has the capability of generating code for any computer controlled machine provided that the necessary code generator files have been either created by the user or purchased from CAMAX. In this module, the student will demonstrate an understanding of the file structure in SmartCAM®, starting with the concept of the job file. Also, the student will understand the terminology of tools and layers.

Presentation Outline:

I. Discuss Basic CAM Operations
   - A. Study job plan creation
   - B. Study the file structure in CAM
   - C. Discuss the difference between tools and layers

Practical Application:

Students will observe and participate in the discussion of the topics listed above. Following the demonstrations, students will complete projects assigned by the instructor.

Evaluation and/or Verification:

Successful completion of this technical module will be based on the students' successful completion of the following components:

a. Create a job plan in SmartCAM;
b. Discuss the file structure in SmartCAM; and,
c. Discuss the difference between tools and layers.

Summary:

Review the main lesson points using the suggested text listed in the reference section of this module. Hold class discussion and answer student questions.

Next Lesson Assignment:

MASTER Technical Module (LSR-J3) pertaining to the setting up of cutting tools.

LSR-J2-HO
Discuss Basic CAM Operations
Attachment 1: **MASTER** Handout

Objective(s):

Upon completion of this unit the student will be able to:

a. Demonstrate an understanding of the SmartCAM® job plan concept;
b. Discuss the file structure in SmartCAM®; and,
c. Discuss the difference between tools and layers.

Module Outline:

I. Discuss Basic CAM Operations
   A. Study job plan creation
   B. Study the file structure in CAM
   C. Discuss the difference between tools and layers

Successful completion of this technical module will be based on the students' successful completion of the following components:

a. Create a job plan in SmartCAM;
b. Discuss the file structure in SmartCAM; and,
c. Discuss the difference between tools and layers.

LASER MACHINING SERIES

MASTER Technical Module No. LSR-J3

Subject: Laser Machining **Time:** 3 Hrs.

Duty: **Perform Computer-Aided Manufacturing (CAM)**
Task: Set up Cutting Tools

Note: SmartCAM® is being used as a typical CAM system.

Objective(s):

Upon completion of this unit the student will be able to:

a. Demonstrate an understanding of the Z axis positions of **Level**, **Profile Top**, and **Clearance**;
b. Demonstrate how to set tool offsets; and,
c. Discuss how to sequence data using Insert operations.

Note: SmartCAM® commands are shown in bold.

Instructional Materials:

SmartCAM® milling and/or fabrication software Version 8 or higher
486 DX2 or Pentium computer (IBM compatible) with SVGA monitor
MASTER Handout (LSR-J3-HO)
MASTER Laboratory Exercise (LSR-J3-LE)

References:

Getting Started with SmartCAM® Milling, CAMAX Manufacturing Technologies, Latest Edition
Getting Started with SmartCAM® Advanced Fabrication, CAMAX Manufacturing Technologies, Latest Edition
SmartCAM® Milling Training Manual, CAMAX Manufacturing Technologies, Latest Edition
CNC Process Modeling using SmartCAM, Lin, Dr. S. C., et. al., Scholars International Publishing Corp., Latest Edition

Student Preparation:

Students should have previously completed the following Technical Modules:
LSR-J2 "Discuss Basic CAM Operations"

Introduction:

CAM programming involves an understanding of machining, computers, materials, and part processing. SmartCAM® utilizes a concept called "**The CNC Process Model**" which incorporates the creation of part geometry as tool paths and allows for change and interaction with the model. The path of the cutting tool can be viewed at any time in any number of viewing angles. Once the geometry and order of operation are complete, CNC code is generated to a file and downloaded to the machine. This code is in compliance with the specific machine on which the part will be manufactured. SmartCAM has the capability of generating code for any computer controlled machine provided that the necessary code generator files have been either created by the user or purchased from CAMAX. In this module, the student will demonstrate an understanding of SmartCAM's Insert toolbox in which the cutting tool properties of: Offset, Level, Clearance, Profile Top are entered. Also, the student will demonstrate how to use the Insert toolbox to properly sequence data.

Presentation Outline:

I. Set Up Cutting Tools
   - A. Determine how to sequence elements
   - B. Perform tool offset (OFFSET)
   - C. Determine Z-axis positions (LEVEL & PROF_TOP)
   - D. Determine how set clearance for cutting tools (CLEAR)

Note: SmartCAM® commands are shown in caps.

Practical Application:

Students will observe and participate in the discussion of the topics listed above.

Evaluation and/or Verification:

Successful completion of this technical module will be based on the students' successful completion of the following components:

a. Demonstrate how to sequence elements;
b. Demonstrate how to set tool offset (OFFSET);
c. Demonstrate how to enter Z-axis positions (LEVEL & PROF_TOP); and,
d. Demonstrate how to set clearance for cutting tools (CLEAR).

Summary:

Review the main lesson points using the suggested text(s) listed in the reference section of this module. Hold class discussion and answer student questions.

Next Lesson Assignment:

MASTER Technical Module (LSR-J4) pertaining to the creation of part profiles.

LSR-J3-HO
Set Up Cutting Tools
Attachment 1: **MASTER** Handout

Objective(s):

Upon completion of this unit the student will be able to:

a. Demonstrate an understanding of the Z axis positions of **Level**, **Profile Top**, and **Clearance**;
b. Demonstrate how to set tool offsets; and,
c. Discuss how to sequence data using Insert operations.

Note: SmartCAM® commands are shown in bold.

Module Outline:

I. Set Up Cutting Tools
   A. Determine how to sequence elements
   B. Perform tool offset (OFFSET)
   C. Determine Z-axis positions (LEVEL & PROF_TOP)
   D. Determine how set clearance for cutting tools (CLEAR)

Note: SmartCAM® commands are shown in caps.

LSR-J3-LE
Set Up Cutting Tools
Attachment 2: **MASTER** Laboratory Exercise

Successful completion of this technical module will be based on the students' successful completion of the following components:

a. Demonstrate how to sequence elements;
b. Demonstrate how to set tool offset (OFFSET);
c. Demonstrate how to enter Z-axis positions (LEVEL & PROF_TOP); and,
d. Demonstrate how to set clearance for cutting tools (CLEAR).

LASER MACHINING SERIES

MASTER Technical Module No. LSR-J4

Subject: Laser Machining **Time:** 10 Hrs.

Duty: Perform Computer-Aided Manufacturing (CAM)
Task: Create Simple Part Profiles

Note: SmartCAM® is being used as a typical CAM system.

Objective(s):

Upon completion of this unit the student will be able to:

a. Demonstrate how to input basic geometry in SmartCAM;
b. Demonstrate some fundamental editing commands;
c. Demonstrate how to change the view of the part profile; and,
d. Discuss how SmartCAM creates CNC code.

Instructional Materials:

SmartCAM® milling and/or fabrication software Version 8 or higher
486 DX2 or Pentium computer (IBM compatible) with SVGA monitor
MASTER Handout No. 1 (LSR-J4-HO1)
MASTER Handout No. 2 (LSR-J4-HO2) (Tutorial 1: Doing the Shoulder Block Step by Step)
MASTER Laboratory Exercise (LSR-J4-LE)
MASTER Laboratory Worksheet No. 1 (LSR-J4-LW1)
MASTER Laboratory Worksheet No. 2 (LSR-J4-LW2)

References:

Getting Started with SmartCAM® Milling, CAMAX Manufacturing Technologies, Latest Edition
SmartCAM® Milling Training Manual, CAMAX Manufacturing Technologies, Latest Edition
CNC Process Modeling Using SmartCAM, Lin, Dr. S. C., et. al., Scholars International Publishing Corp., Latest Edition

Student Preparation:

Students should have previously completed the following Technical Modules:
LSR-J3 "Set Up Cutting Tools"

Introduction:

CAM programming involves an understanding of machining, computers, materials, and part processing. SmartCAM® utilizes a concept called "**The CNC Process Model**" which incorporates the creation of part geometry as tool paths and allows for change and interaction with the model. The path of the cutting tool can be viewed at any time in any number of viewing angles. Once the geometry and order of operation are complete, CNC code is generated to a file and downloaded to the machine. This code is in compliance with the specific machine on which the part will be manufactured. SmartCAM has the capability of generating code for any computer controlled machine provided that the necessary code generator files have been either created by the user or purchased from CAMAX. In this module, the student will demonstrate an understanding of how to create simple geometry in SmartCAM. The student will learn sufficient editing commands to complete a part program and produce CNC code.

Presentation Outline:

I. Create Simple Part Profiles
   - A. Discuss how to input lines, arcs, and circles
   - B. Use WALL_OFFSET for roughing cuts
   - C. Create blend radii
   - D. Create lead in and out moves
   - E. Change the view of the part profile (ZOOM, VIEW_ANGLE, Etc.)

Note: SmartCAM® commands are shown in caps.

Practical Application:

Students will observe and participate in the discussion of the topics listed above. Following the demonstrations, students will complete LSR-J4-LW1 and LSR-J4-LW2.

Evaluation and/or Verification:

Successful completion of this technical module will be based on the students' successful completion of the following components:

a. Demonstrate how to input lines, arcs, and circles;
b. Demonstrate how to create roughing passes using (OFFSET);
c. Demonstrate how to create blend radii;
d. Demonstrate how to create lead-in lead-out moves; and,
e. Domonstrate how to change the view of the SmartCAM screen.

Summary:

Review the main lesson points using the suggested text(s) listed in the reference section of this module. Hold class discussion and answer student questions.

Next Lesson Assignment:

MASTER Technical Module (LSR-J5) pertaining to the creation and editing of complex part profiles.

LSR-J4-HO1
Create Simple Part Profiles
Attachment 1: **MASTER** Handout No. 1

Objective(s):

Upon completion of this unit the student will be able to:

a. Demonstrate how to input basic geometry in SmartCAM;
b. Demonstrate some fundamental editing commands;
c. Demonstrate how to change the view of the part profile; and,
d. Discuss how SmartCAM creates CNC code.

Module Outline:

I. Create Simple Part Profiles
   A. Discuss how to input lines, arcs, and circles
   B. Use WALL_OFFSET for roughing cuts
   C. Create blend radii
   D. Create lead in and out moves
   E. Change the view of the part profile (ZOOM, VIEW_ANGLE, Etc.)

Note: SmartCAM® commands are shown in caps.

Doing the SHOULDER BLOCK step by step

Before we begin, let's think about how we are to machine this part. This block is a 2 x 2 square with a shoulder pattern on the top. We will cut this from 2.5 x 2.5 x 1.5 inch stock. The stock has been faced and squared and will be held in a vise. Z0 (Z zero) will be taken as the top of the part. X0 (X zero) and Y0 (Y zero) will be the lower left corner of the stock.

Two tools will be used: ϕ1.00 endmill for roughing and ϕ.500 endmill for finishing. Both tools are HSS, center cuttting and four (4) teeth.

This part will be machined as follows:

1. Step 1: using tool 1, takes a ***roughing*** path around 2 x 2 perimeter leaving .020 on the sides for finish. Tool 1 then takes a roughing path around .25 deep shoulder leaving .020 for finish on sides **and bottom.**
2. Step 2: using tool 2, takes a finishing path around 2 x 2 perimeter removing .020 from side. Then tool 2 takes path around .25 deep shoulder removing .020 from side and bottom.
3. Lead in and outs are provided for all cuts!! No plunging into material allowed.

Following machining, the part will be inverted and fly cut to remove the remainder of the stock. This is a separate operation.

First, let's get into SmartCAM. From Window's main menu:
Double click on the SmartCAM icon
→ Double click on Advanced 3D Machining.
SmartCAM's graphic screen and menu appears.

STEP 1: Create job file

1. File → New. You get a dialogue box asking for the name of the job file to be used. However, we have not as yet made one, so, click on "New JOF" to open the Edit Job Info dialog box. In the dialog box:
   Created by: Enter your name
   Machine File: TMC1000
   Part Description: Shoulder block
   Material Desc: AISI 1018

Notes: Whatever seems appropriate.
Close

You have only created Job Information. We must now create the steps with their tools.

2. File → Job File → Add/Edit step. The Add/Edit dialog box appears. Notice "Step" defaults to Step 1 and we are in New_Step mode. There are two key areas for defining a step. **TI ID** (Tooling Identification) and **Op ID** (Operation identification). TI defines the type of tool (endmill, drill, etc.), diameter, length, and so on. Op ID defines the type of operation (milling, drilling, etc.), roughing or finishing, speeds and feeds.

Click on TI ID. Now click on "Edit Page". The Add Tooling Page appears. In the dialog box:

Mill Tool: Click on
In the box: Click on "End Mill"
Accept.

Now the Tooling dialog box appears. "Tooling ID" defaults to ENDMILL.1, this is OK. In the dialog box:

Description: 1.00 dia endmill
Comment: Roughing
Tool Diameter: 1.0
Overall Length: 4.0
Center Cutting: ON
Number of Flutes: 4
Tool_Matl: HSS
Leave all others to their defaults.
Close

Now, let's deal with operation ID. Click on Op ID, then click on Edit Page. The Operation dialog box appears.

The part material is 1018 steel. Checking Machinery's Handbook, or suitable source, indicates that for roughing low carbon steel with a 1.0 dia HSS endmill a speed of 80 Surface Feet per Min. and a feed of .005 inches per tooth are recommended. For finishing with a .5 dia HSS endmill use a speed of 140 Surface Feet per Min. and a feed of .001 inches per tooth. So, In the dialog box:

Speed SFPM: 80
RPM: see note
Primary Feed IPR: see note
IPM: see note
IPT: .005

Note: RPM (revolutions per minute), IPR (inches per revolution) and IPM (inches per minute) all update automatically following entry of SFPM and IPT data.

Accept defaults for Width of Cut, Depth of Cut, Finish and Floor allowances, life, and coolant.
Close.

You are now back to the Add/Edit step dialogue box. Click on "New Step". Step 2 registers. Repeat the same procedure as above for the finish tool.

Following completion of the second step, save your work. File → Save as. In the dialog box:

P.M. file: a:\demo1 (P.M. means process model, your graphics)
Job File: a:\demo1
Make sure "both" is ON. This will save graphics and job file together

STEP 2: Setting up view screen

1. Let's set the screen size to be compatible with our drawing dimensions:
   VIEW → ENVELOPE In the dialog box:
   MINIMUM: X -1 Y -1 Z -1
   MAXIMUM: X 3 Y 3 Z 1

Remember: Use mouse to click on any value to enter or change.

Note that min values need a negative sign !!

When all values are entered, hit ACCEPT.

2. Let's establish this envelope as the base view, then give the view a name to facilitate changing views. VIEW → BASE and VIEW → NAME VIEW → TOP2 <ENTER>

3. We will now set some display parameters. Utility → Display modes
In the dialog box, accept all defaults except:
   Thickness: turn on
   Draw tools: Set to 3D tools
   Accept

STEP 3: Cutting the perimeter (2 x 2 square)

In SmartCAM we draw the FINISH profiles first. In other words, simply draw the part as shown. Therefore, we need to call up the finish tool (step 2) and assign the appropriate properties. We will start by drawing the 2 x 2 square in a CCW direction. Note that the depth of this square is .75. In other words, the bottom of the end mill should be at

Z = -.75 when cutting or profiling this 2 x 2 square.

1. INSERT → With Step → Click on step 2 (in lower right of screen)
   Note: The Sequence segment (Before/After) is meaningless when we are entering the first elements. So, we simply accepted the default of After element 0

   In the dialog box, enter the properties:
   OFFSET: RIGHT
   LEVEL: -.75
   CLEAR: .25
   PROF_TOP: -.25 (Click it on first)

   Offset, is where we want the tool with respect to the geometry. We are machining in a CCW direction, therefore, with respect to that direction, we want the tool to the right of the geometry. Remember, we will draw this as it appears on the print. Level, is the Z position representing the bottom of the geometry, -.75 in this case. Prof_top is the Z position representing the top of the geometry. In our case it is at Z = -.25. Remember, all Z positions are referenced from Z0 which is the top of the part.

2. Now it's time for geometry. CREATE → GEOMETRY → LINE

   Remember, the dialog box is mouse active. You can click anywhere to enter data in any order you wish. Note that the Z has already been defaulted to -.75 This was set at Level during the Insert command.

   Enter.. Start Point : X 0 Y 0
   End Point : X2 Y 0

   The first line is drawn as shown in figure 1. The circle represents the .5 diameter finish endmill shown with an offset of right.

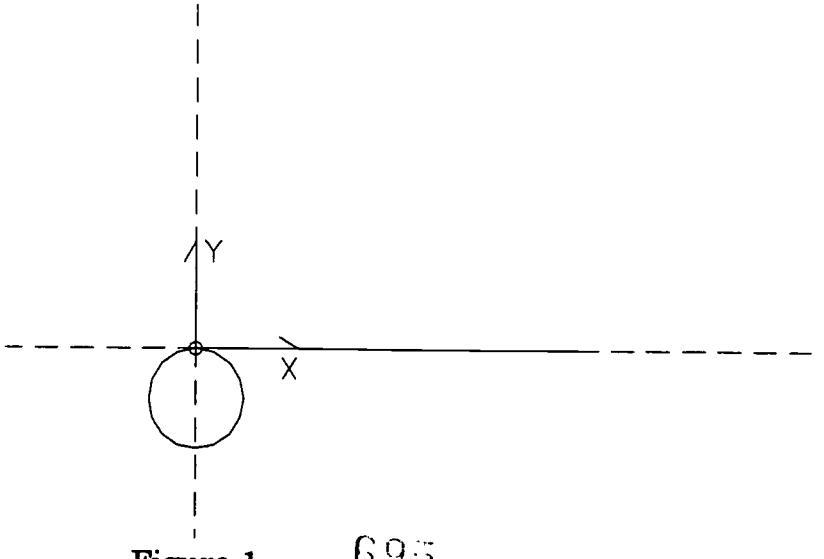

Figure 1

In the dialog box, notice that when SC is close to drawing your line, an asterisk (*) appears. This means that one more piece of data will trigger a line.

3. For the second line, we'll take advantage of SC's snap ability. You can snap to a line's endpoint or midpoint, to a circle or arc's center, or to the intersection of two lines.

We are already in the line dialog box, so click on the words "Start Point". Notice that Start Point lights up, this places the cursor in coordinate mode, meaning that when we snap to an endpoint, we get the X, Y, and Z values. Use the mouse to click on the end of the first line in the graphic view. Notice X 2 Y 0 Z -.75, which is the endpoint of the line, fills the "start point" in the dialog box.

Now, for the End Point, simply click on the "X" in the dialog box and enter 2, click on the "Y" and enter 2 and you've got the second line. (The Z should remain -.75.)
Complete the last two lines returning to X 0 Y0. Your screen should look like figure 2.

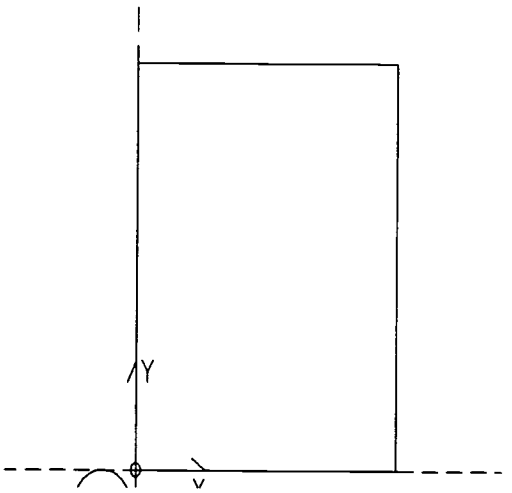

Figure 2

Caution: Be careful if you try to snap near the origin! You probably will grab 0,0,0 when you really wanted 0, 0, -.75. Therefore, you are better off typing in the data.

STEP 4: Cutting the shoulder

In order to cut the shoulder, we must first go through the Insert command in order to set the Z level to the shoulder depth of .25

1. Click on INSERT. Notice you now have a Before/After option. We want the shoulder to be machined **after** the perimeter. Therefore:

   After → Element_Seq → either pick the last element in the data base (For me it was 4), or enter the number in the dialog box. Remember, this first part of this insert command deals with sequence (Notice the Seq!). In other words, where in the data base do we want to put the geometry we are about to enter. This is important because, the order in the data base is the order of machining !!!

   Finish the dialog box settings: Make sure you have with step 2, offset right, prof_top is now at 0, clearance at .25 and set the Level at -.25

2. Geometry → Line. "Start Point" is X.25 Y.25, Z should be defaulted to -.25 If it isn't, you must go back to **Insert** to fix. "End Point" is X1 Y.25 Upon entering the Y, the line triggers. You now have figure 3.

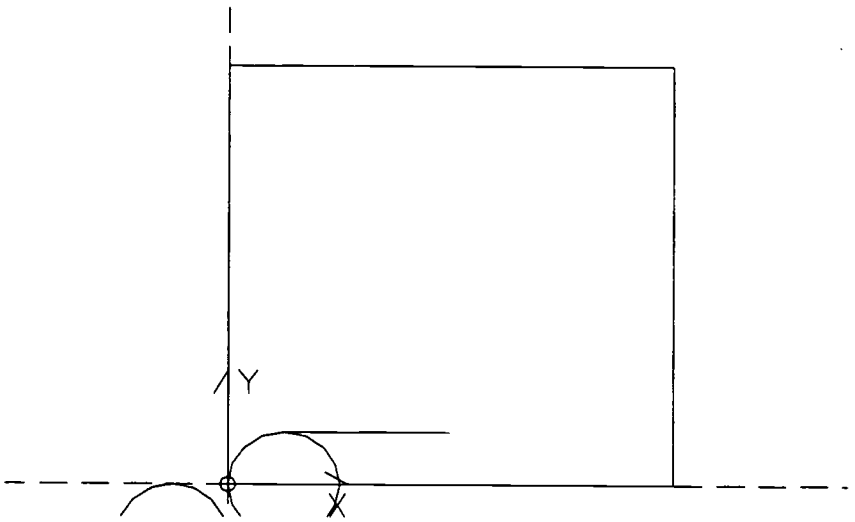

Figure 3

The next line is at a 35 deg angle. For Start Point, click on the words "Start Point" then snap to the end of the last line we drew. SmartCAM now thinks you will be entering a co-ordinate for end point as we notice the words "End Point" are lit up and an asterisk is present. We don't know both coordinates, but we know an angle and the end X. Click on "Line Angle" and enter 35. Notice a dotted line appears. Click on the "X" next to End point and enter 1.75. The line is drawn.

Hit the "Reset" button to clear your line dialog box. This is critical because SmartCAM is now set up to draw 35 degree lines for the rest of your life !!

We will now square off the shoulder and blend the radius later. Remember to Snap to existing values whenever possible !! The start and end points for the next two lines are:

Start Point:	X 1.75	Y .775	Z -.25
End Point:	X 1.75	Y 1.75	Z -.25

and

Start Point	X 1.75	Y 1.75	Z -.25
End Point	X .75	Y 1.75	Z -.25

Note: Using coordinate mode, I snapped to the endpoint of the 35° line. I DID NOT enter the value .775. How would you know this anyway? It is a trig resultant!

Now we must draw a line whose length is known. Click on "Start Point" and snap to the appropriate end point. Now click on "Length" and enter .75. Click on "X" next to "End point" and enter .25. The line goes up! How come? Notice that there are two possible solutions to the info given. Hit the "Undo" button. SmartCAM gives you a pop up dialog box indicating that there is more that one solution. Hit the "next" key until what you want appears on the screen. Hit accept and you've got it! Reset the line dialog box to clear the entered length of .75!!

I'm sure you can draw the last line to X.25 Y.25 Z-.25 to finish the shoulder. You now have figure 4.

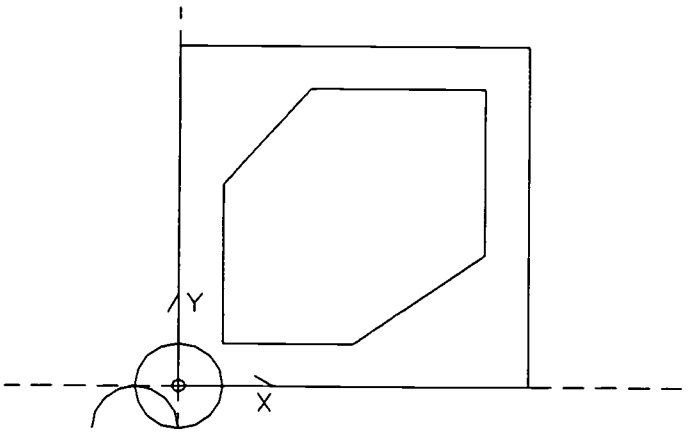

Figure 4

Let's get that radius in there:

Edit → Geo_edit → Blend. Click on "inside radius" and enter .25. The default may already be .25 but get in the habit of checking. Now notice your cursor, you are being asked to pick the two elements for the blend. For "Select first element":, pick one of the two lines. The cursor automatically jumps to "Select 2nd Element", so now pick the second line. (It does not matter which line you pick first.) The radius appears.

3. Finish geometry is now complete. Let's examine our part from other viewpoints:

   View → Get_View → Iso. You may View → Window to improve viewing. We now see the completed finish profiles in an isometric view (Figure 5). You may also see a front view by: View → Get_View → Front (Figure 6).

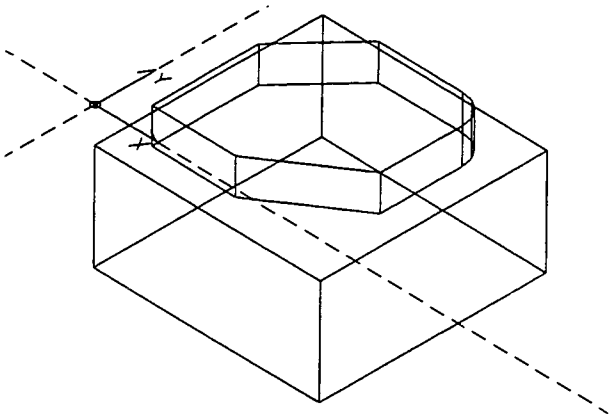

Figure 5

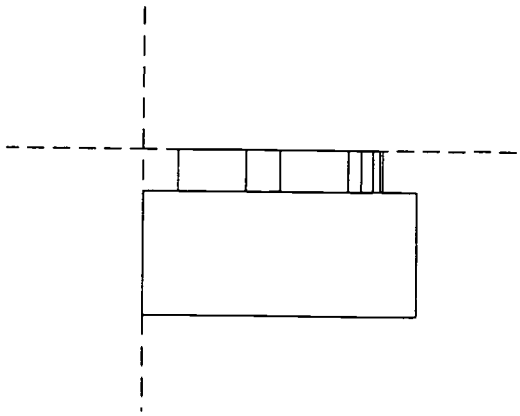

Figure 6

To return to the top view View → Get_View → top2.

At any time, you may perform a Show Path to view how the part will be cut. You can do this in any view. Simply, View → Show Path Pick a "Speed" and hit "Start"! You may cancel your show path by hitting the "Esc" key. You may also change speeds anytime by simply hitting a new number. (You must use the keyboard, not the mouse.)

Notice that the tools are not shown in my figures 5 & 6. As geometry increases, the tools clutter the screen. These may be shut off with Utilities → Display modes.

In the Dialog box, set "Draw Tools" to read "no tools". Accept.

STEP 4B: What if I made a mistake??

Any values you mistakenly or forgot to enter during the INSERT command (Offset, Tool, Level, Clearance, or Prof_top) may be corrected using a Property_Chg command. Property Change is accessed from Edit off the top menu bar. Notice that this is dimmed. The reason is, you must first GROUP the element(s) that need to be changed.

The GROUP is listed under the INSERT command. When you select GROUP, seven selection possibilities are available. You may form a group by:

- Element: Selects one element at a time
- Box: similar to window in most CAD packages
- Range: Selects a range of elements (e.g. start range 2, end range 5)
- Profile: Selects a series of sequential elements (e.g. our 2 x 2 perimeter or the .25 deep shoulder)
- Step, Tool or Layer: Selects all elements associated with the step, tool or layer
- Select All: Selects **everything** on the screen

Whatever the method for grouping (and there are always numerous), you will know a group exists by the little arrows placed at the mid-point of the elements. Also, the elements in the view window will be checked. Once the group is made:

Edit → Property_Chg → Toolpath

You are now looking at a dialogue box. You only have to change what you want to fix. You don't have to enter all the data! For example, if you wanted to change Level, click on "Level" and enter the new value. The N/C means "No Change". So, for example, if you wanted to change "Prof_top", first click the "N/C", turn it "On" and enter the value. The same is true for "Clearance". For offset, clicking the N/C brings up a sub-menu to chose Right, Left, or None. Notice you can even change the step that is cutting the profile!! You have a lot of power here. When done, hit "Accept". Then, you must click on Group → New Group to **cancel** the group. You ***must*** clear the group, it does not clear itself!!

Dimensional values of part geometry can be corrected with: Edit → Geo_Edit → Modify. The modify command works on one element at a time, therefore, no group is needed. Arcs, lines, or points are some of the elements that may be modified. You may change geometry data such as X, Y, or Z coordinates, angle, radius values, points of tangency, etc.

Machine sequence errors are corrected with the Order Path command. This will be discussed later.

STEP 5: Inserting the stock and centering the part

Let's draw the stock for this part. Stock is non-toolpath data. We will use the On Layer option of Insert to set up a layer to draw the stock. Let's go !

1. Insert → After → Element_Seq (either pick or enter the last element in your data base) → On Layer.

   In the dialog box, click on "Add Layer". Enter a number (I'll use 5) pick a color (I'll use green) and if you want, a line type. Accept. You now are working on layer 5. Just because it's non-toolpath doesn't mean there is no thickness! So, in the dialog box make sure you set a Level of -1.5 and turn on Prof_top and set it to 0. After all, our stock is 1.5" thick and already faced.

2. Rather than use the Geometry command, let's use the rectangle command to speed things up.

   Create → User_elements → Rectangle

   Enter X 0 Y0 as the "Rectangle corner" (Notice the Z is already -1.5). Length is 2.5 and the Width is 2.5 The angle is 0 and the corner radii are 0 Hit "Go". The rectangle (stock in our case) is drawn CCW. Figure 7. Notice SmartCAM leaves the rectangle in a Group when finished (See the arrows). You must click on Group → New Group to cancel this.

Enter X 0 Y0 as the "Rectangle corner" (Notice the Z is already -1.5). Length is 2.5 and the Width is 2.5 The angle is 0 and the corner radii are 0 Hit "Go". The rectangle (stock in our case) is drawn CCW. Figure 7. Notice SmartCAM leaves the rectangle in a Group when finished (See the arrows). You must click on Group → New Group to cancel this.

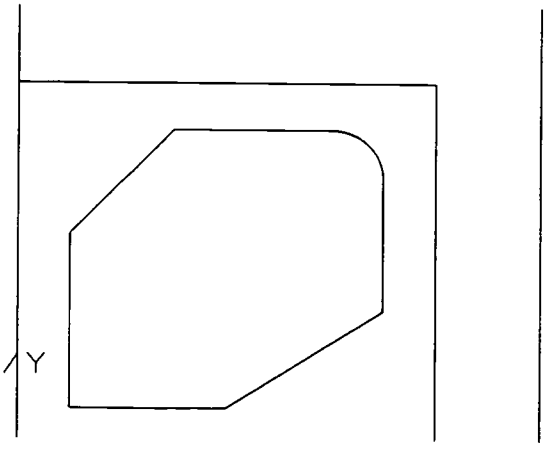

Figure 7

Let's now center the part in the stock. Group the part. The fastest way is to use the Step option of group and either pick step 2 from the view box or enter 2 in the dialog box.

Edit → Transform → Move

For "From point", the easiest thing to do is to click on "From 0". Notice, X0 Y0 Z0 fills in for "From point". For "To point": X .25 Y.25 Z0 will center the part. Notice there is no "GO" button. As soon as you enter sufficient data, the result triggers. We now have figure 8.

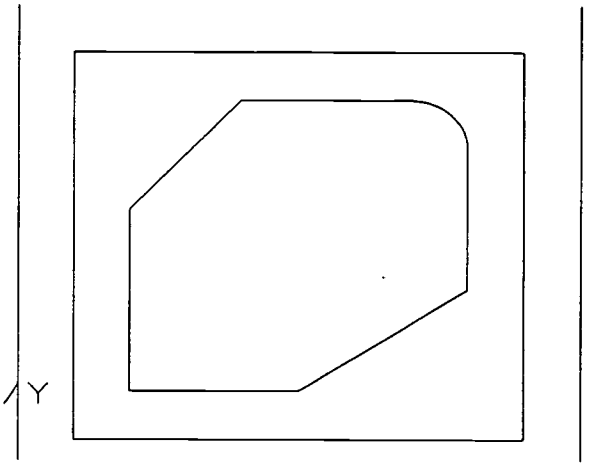

Figure 8

A comment on the numbers. The part is 2 x 2 and the stock is 2.5 x 2.5; so, to center the part from X0 Y0 we need to move .25 in both X and Y. What about the Z? If Z = 0 is the "From point", there will be NO Z movement providing that the "To point" for Z is also 0. In other words, if we made the "To point" Z = -.25, the part would move from Z0 to Z-.25, Not a good thing for this application. Group → New Group!

STEP 6: Roughing

Let's think about roughing this part. First, there is not much material to rough out. Two passes leaving a finish allowance (.020) will be the extent of the roughing. The two passes are: the 2 x 2 square (the perimeter) and the .25 deep shoulder. In addition to leaving .020 on the walls for a finish pass, we will take our pass for the shoulder at Z = -.23. This leaves .020 on the bottom surface.

1. Insert → Before → Step_Seq → 2
   This command will ensure that the roughing will occur before the finish.

There are other ways to set-up the insertion point.
Insert → After → Element_seq → 0
Obviously, if something occurs after element 0 (The origin) it will occur first.

Insert → Before → Element_seq → 1
Again, the roughing will occur first thing.

I don't care how you mark the insertion point as long as it is correct.

Now, let's set up the tool and its properties:
Click on "With step" and either enter 1 or pick step 1 from the view list.
Offset: right
Level: -.75 (we'll rough the perimeter first)
Prof_top: on and 0
Clear .25

A note on Profile top: This is now the roughing. The geometry for the roughing pass starts at Z 0, the top of the part.

2. If you like a lot of work, go into geometry and draw four lines to represent the roughing. But, there's an easier way:

Create → Geometry → Wall_offset In the dialogue box:

Enter the offset distance, which for us, is the finish allowance of .020. The cursor moves and prompts you to pick any element in the profile to be offset. Notice the offset side is set to mouse. Therefore, when you pick the 2 x 2 square DO NOT pick right on the lines, pick just to the side you want the offset to be. You only have to be close to the profile.

Now we have 4 new lines .020 from the finish pass at a Z_level of -.75.

Do a show_path and you will see the rough tool go into action first.

3. Now, let's rough the shoulder. For this we not only want to leave .020 on the sides, but .020 on the bottom as well.

Insert → After → step_seq → 1 (this ensures that the shoulder rough will occur after the perimeter rough)

Enter tool properties: step 1 , offset: right, Level: -.230 (notice the .020 allowance for finish on the shoulder bottom!) Clear and Prof_top are as before.

Create → Geometry → Wall offset

Enter the .020 wall distance and pick the shoulder. Again, pick near any one of the elements representing the shoulder profile, but on the side you want the offset to go. Figure 9 shows the offsets (roughing) completed.

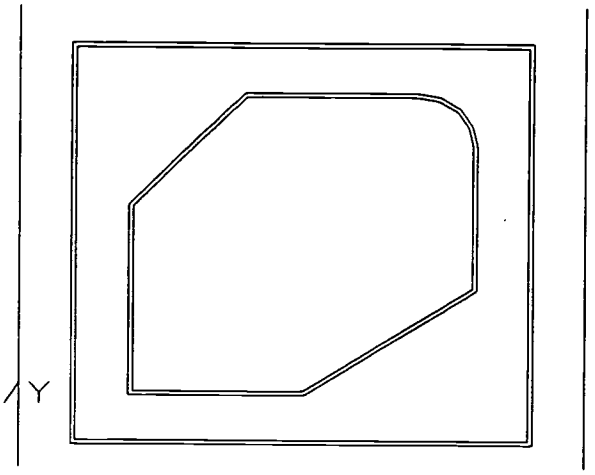

Figure 9

STEP 7: Lead in/out

Lead in/out is an edit command. They are performed using Geo_edit which lives under the Edit command of the top menu bar. Because this is an edit command we do not have to go through Insert to set up sequencing and tool properties. Also, angle 0 is no longer at the 3:00 position, rather, it varies depending on the profile.

Let's add a lead in and out to the roughing passes.

Edit → Geo_edit → Lead in/out

Notice you can perform a lead-in alone, a lead-out alone, or both simultaneously. Because the angle 0 is unique, we can do both at once. In the dialogue box:

Click on "Both"
Click on "Line"
Angle: 0 This means the lead in and out will follow the corresponding elements in the profile. For example, if the first element (which lead-in will follow) is horizontal, the lead-in will be horizontal.
Length: 1
Click on "Offset Match"

SmartCAM now has enough info and an * appears at "Select element in profile". So, first pick the square representing the roughing profile (any element will do) and the lead in and out appear. Then, pick the roughing profile representing the shoulder.

Now, let's perform the lead in and out for the finish profiles. For finish, we do not want offset match (explanation to follow). Therefore, turn off "offset match" and repeat the above selections for the two finish profiles. Lead in/out is now complete. Notice that the same length and angle values apply to the shoulder as to the perimeter. Why not!! You now have figure 10.

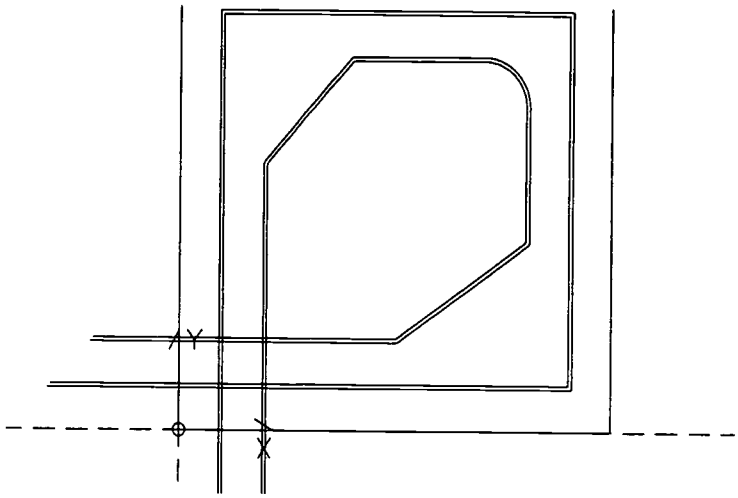

Figure 10

Important note on length and offset match. Be careful when assigning a length value. First, length controls whether or not the tool plunges into material. Therefore, the length must be sufficient to avoid plunging into material. Second, when lines are used for lead ins and lead outs, they are drawn with an offset of NONE. This causes the tool to angle into (or out of) the profile to break any corner burrs. If the lead in or out line is too short, the break will be too large, causing a chamfer. When we are roughing, there is no concern for deburring seeing that a finish pass is to follow. Therefore, we turn on "offset match" for the lead in and out for our roughing step. When we perform the lead in and out for the finish passes, we turn off "offset match". So, make sure you always review your work with Show_path.

Let's do it! First, get a closer look. View → Window to zoom in on the lead in/out areas (Figure 11). Now, perform a show path at a speed of 2. You will notice that the lead in and out for the roughing passes do not plunge into the stock and do not break edge. The lead in and out for the finish passes do not plunge into material, but do break edge and thus deburr the corners. Also notice that the break is resonable.

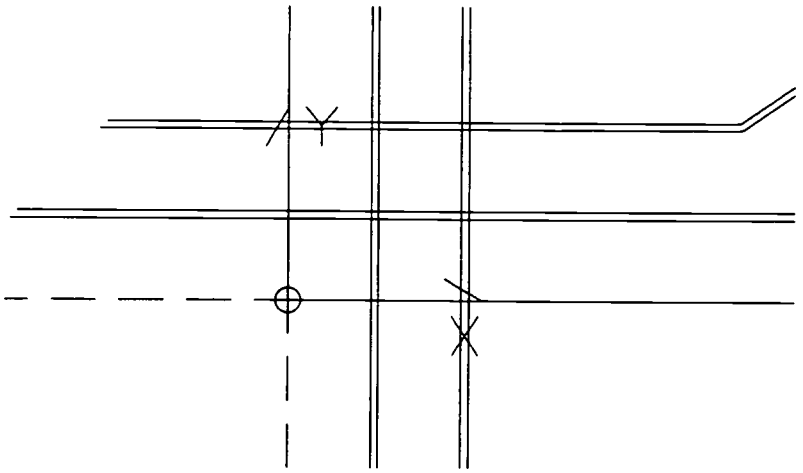

Figure 11

For the record, to lead in or out with an arc. Start by clicking on Arc. For angle, 45 works well and a radius of 1 will give decent results. You can play around with these values (using Undo) until you are happy. Also, lead in and outs using arcs are always drawn with an offset *matching the profile*. Therefore, arcs are good for blending surfaces.

STEP 8: Insert home point for step 1

Our TMC1000 locates 0,0,0 from the first tool. Therefore, seeing that step 1 uses tool 1, we must locate the first step in the correct start position. Tool changing after tool 1 does not have to be done from any specific point. So, don't worry about it.

Let's put in the home point for step 1. We will use X -1 Y 2.5 Z .5 for the home point.

Insert → After Element_seq 0

I hope this is making sense by now: After element 0 ensures the home point is first. Also note that this pushes the roughing down in the data base. That's O K, our sequence of events will come out correct: Tool home, rough, then finish!

Enter properties: with step 1, Level .5, clear .25
offset and prof_top are not applicable for points, so ignore the settings.

Create Geometry Point/Rapid

Enter an X of -1, notice you are being asked for a Y. Also, notice that an * appears next to the Y. Once you enter a Y value the point will trigger. Once the point

triggers, the Y clears but the X doesn't. So before you go ahead a re-enter your Y value, check your elements and see if you now have a point as element 1!!

STEP 9: Code

If you made it this far, the worst is over. Coding is the easiest but most important part of the job, as this is the instruction to a computer driven machine tool to cut your part.

From the top menu bar, Process Code

In the dialog box: For "Code file", use your graphics name with an extension of .NC For example, if I am working on DEMO1.PM4, and I have a job file called DEMO1.JOF, I would call my code output file DEMO1.NC

You need to enter the proper machine and template files:
For "Smf File" enter H:\tmc1000
For "Tmp File" enter H:\tmc1000

Hit start and the code file is created. This file is created automatically and therefore is saved. Be careful with your directories! Make sure all three files .PM4, .JOF, and .NC all go to the same directory, such as a:\ .

The only place where you can look at your code is in the Edit_Plus section from the main SmartCAM menu.

We're done! However, if you noticed, the finish pass on the shoulder bottom does not clean. The .5 dia endmill is not wide enough. Any thoughts on how you would fix this?

LSR-J4-LE
Create Simple Part Profiles
Attachment 3: **MASTER** Laboratory Exercise

Successful completion of this technical module will be based on the students' successful completion of the following components:

a. Demonstrate how to input lines, arcs, and circles;
b. Demonstrate how to create roughing passes using (OFFSET);
c. Demonstrate how to create blend radii;
d. Demonstrate how to create lead-in lead-out moves; and,
e. Domonstrate how to change the view of the SmartCAM screen.

LSR-J4-LW1
Create Simple Part Profiles
Attachment 4: **MASTER** Laboratory Worksheet No. 1

Use SmartCAM to create the necessary tool paths to obtain CNC code required for manufacturing the part shown below. The material is aluminum.

1. You will need three steps using three tools:
   a. one .375 diameter endmill for roughing: 4 flute, 400 SFPM, .006 IPT
   b. one .375 diameter endmill for finishing: 4 flute, 800 SFPM, .001 IPT
   c. one .125 diameter endmill for cutting the "S": 2 flute, 600 SFPM, .003 IPT

   All tools are HSS. All endmills are center cutting. Use 1 inch for each tool's preset length. Use your judgement for all other data.

2. Cut the part from 2.5 x 2.5 x 1.0 stock. Center the part in the stock.

3. Step one starts at the home position: X -1.0, Y 2.5, Z .5
   X0, Y0 is the lower left corner of the stock, Z0 is the top of the stock.

4. Perform roughing by taking one pass around the 2 x 2 square and one pass around the shoulder. Leave .020 on all sides AND .020 on the surface of the shoulder for the finish passes. No roughing pass is needed for the "S".

5. Provide a lead-in and lead-out for all finish passes. However, a lead in/out is NOT required for the "S". Plunging into material is not allowed. However, plunging into material IS allowed for machining the "S".

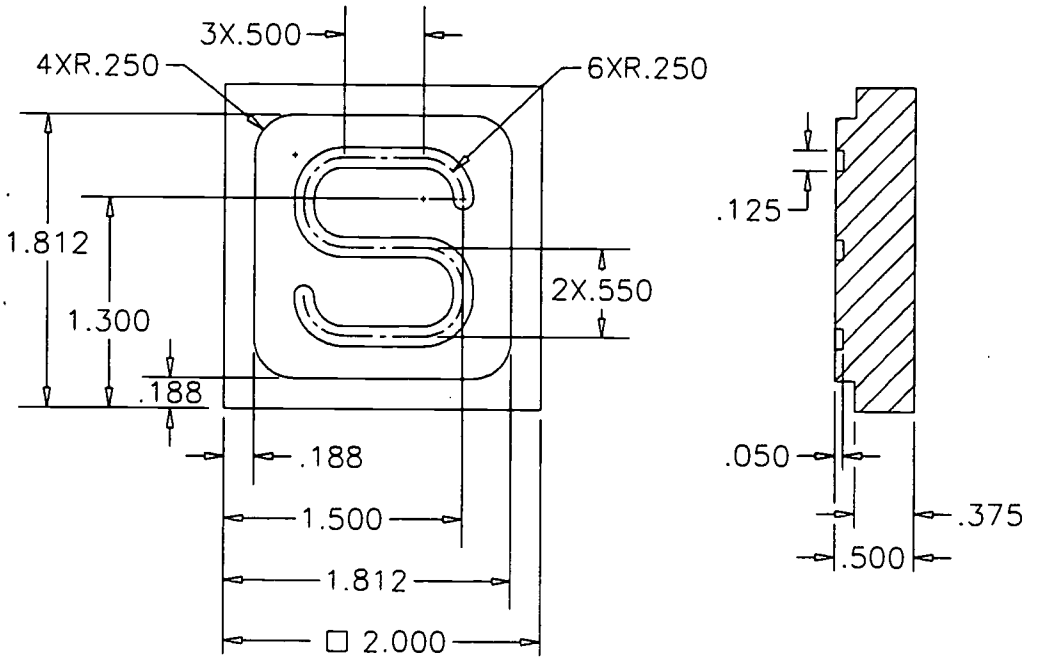

Hand in: This paper and graphic printout of part in isometric. Also, graphics file, job file, and code on a diskette.

LSR-J4-LW2
Create Simple Part Profiles
Attachment 5: **MASTER** Laboratory Worksheet No. 2

Use SmartCAM to create the necessary tool paths to obtain CNC code required for manufacturing the part shown below. The material is aluminum.

1. You will need four steps using four tools:
   a. one 1.000 diameter endmill for roughing: 4 flute, 400 SFPM, .008 IPT
   b. one .500 diameter endmill for finishing: 4 flute, 800 SFPM, .002 IPT
   c. one .250 diameter drill: 2 flute, 118° included angle, 225 SFPM, .004 IPR
   d. one .500 diameter counterbore: 2 flute, 225 SFPM, .006 IPR

   All tools are HSS. All endmills are centercutting. Set 1 inch for present length. Use your judgement for all other values.

2. Cut the part from 4.5 x 3.0 x 1.0 stock. Center the part in the stock.
3. Step one starts at the home position: X -1.0, Y 2.5, Z .5
   X0, Y0 is the lower left corner of the stock, Z0 is the top of the stock.
4. Leave .020 on the sides of the part for the finish pass.
5. Provide a lead-in and lead-out for all finish passes. Do not plunge into material.

Suggestion: Create the part in the 2nd quadrant (this makes the dimensions easier to use), using the lower right corner of the part as X0, Y0 and proceed CLOCKWISE. Then, create the stock in the first quadrant as is our usual procedure. Finally, move the part into the 1st quadrant, centering in the stock.

Hand in this paper and graphic printout of part in isometric. Also, graphics file, job file, and code on a diskette.

EXTRA CREDIT: The one inch mill will not fully clean the upper right corner of the part. Create the necessary tool pass(es) to complete the job. DO NOT waste machine time.

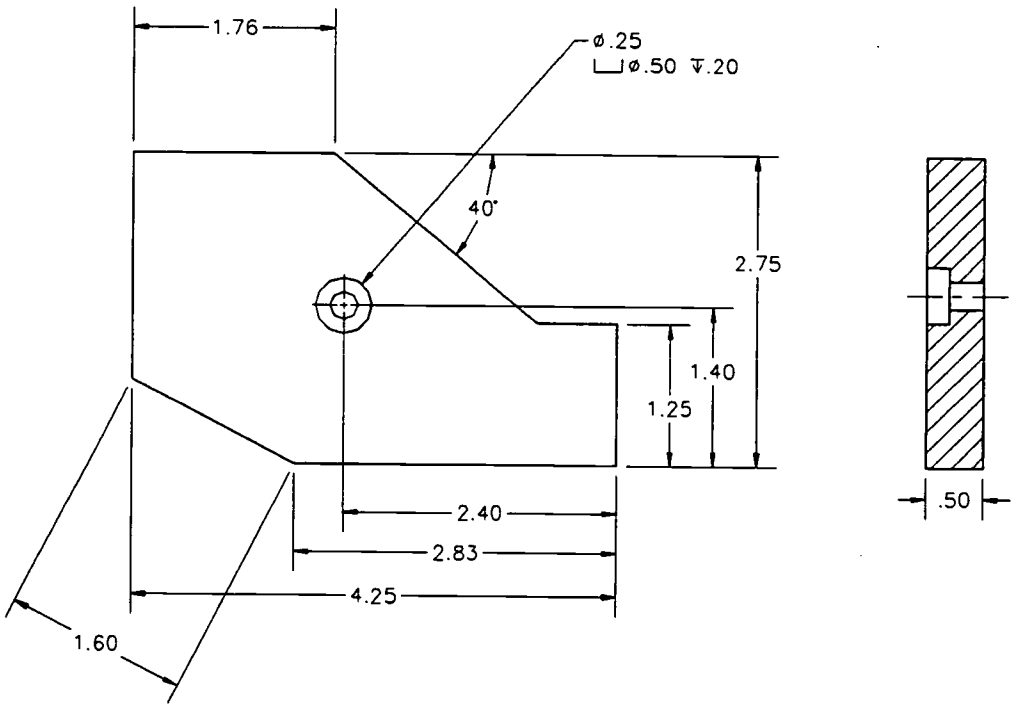
1.76
ø.25
⌴ø.50 ⩛.20
40°
2.75
1.40
1.25
2.40
2.83
4.25
1.60
.50

LASER MACHINING SERIES

MASTER Technical Module No. LSR-J5

Subject: Laser Machining **Time:** 10 Hrs.

Duty: Perform Computer-Aided Manufacturing (CAM)
Task: Create And Edit Complex Part Profiles

Note: SmartCAM® is being used as a typical CAM system.

Objective(s):

Upon completion of this unit the student will be able to:
a. Demonstrate how to input free form geometry in SmartCAM;
b. Demonstrate group editing commands;
c. Demonstrate how to change the path order of the part profile; and,
d. Discuss how SmartCAM creates CNC code.

Instructional Materials:

SmartCAM® milling and/or fabrication software Version 8 or higher
486 DX2 or Pentium computer (IBM compatible) with SVGA monitor
MASTER Handout No. 1 (LSR-J5-HO1)
MASTER Handout No. 2 (LSR-J5-HO2) (Tutorial 2: Free Form Geometry)
MASTER Laboratory Exercise (LSR-J5-LE)
MASTER Laboratory Worksheet No. 1 (LSR-J5-LW1)
MASTER Laboratory Worksheet No. 2 (LSR-J5-LW2)

References:

Getting Started with SmartCAM® Milling, CAMAX Manufacturing Technologies, Latest Edition
SmartCAM® Milling Training Manual, CAMAX Manufacturing Technologies, Latest Edition
CNC Process Modeling Using SmartCAM, Lin, Dr. S. C., et. al., Scholars International Publishing Corp., Latest Edition

Student Preparation:

Students should have previously completed the following Technical Modules:
LSR-J4 "Create Simple Part Profiles"

Introduction:

CAM programming involves an understanding of machining, computers, materials, and part processing. SmartCAM® utilizes a concept called "**The CNC Process Model**" which incorporates the creation of part geometry as tool paths and allows for change and interaction with the model. The path of the cutting tool can be viewed at any time in any number of viewing angles. Once the geometry and order of operation are complete, CNC code is generated to a file and downloaded to the machine. This code is in compliance with the specific machine on which the part will be manufactured. SmartCAM has the capability of generating code for any computer controlled machine provided that the necessary code generator files have been either created by the user or purchased from CAMAX. In this module, the student will demonstrate an understanding of how to create complex geometry in SmartCAM. The student will learn how to input the geometry in a free form style (similar to CAD), then edit the profile into a continuous tool path.

Presentation Outline:

I. Create and Edit Complex Part Profiles
   - A. Use trim profiles (GROUP_TRIM & PROFILE_TRIM)
   - B. Clean up disconnected elements to an intersection (TRIM_EXTEND)
   - C. Change tool properties
   - D. Change geometry values (MODIFY)
   - E. Arrange elements sequentially (CHAIN)
   - F. Create chamfers
   - G. Split elements in segments

Note: SmartCAM® commands are shown in caps.

Practical Application:

Students will observe and participate in the discussion of the topics listed above. Following the demonstrations, students will complete the following laboratory worksheets: LSR-J5-LW1 and LSR-J5-LW2.

Evaluation and/or Verification:

Successful completion of this technical module will be based on the students' successful completion of the following components:

a. Demonstrate how to use editing commands to trim profiles into continuous toolpaths;
b. Demonstrate how to modify geometry and tooling properties;
c. Demonstrate how to create a continuous profile using CHAIN;

d. Demonstrate how to split elements; and,
e. Demonstrate how to create chamfers.

Note: SmartCAM® commands are shown in caps.

Summary:

Review the main lesson points using the suggested text(s) listed in the reference section of this module. Hold class discussion and answer student questions.

Next Lesson Assignment:

MASTER Technical Module (LSR-J6) pertaining to roughing, drilling, and counterboring.

LSR-J5-HO1
Create and Edit Complex Part Profiles
Attachment 1: **MASTER** Handout No. 1

Objective(s):

Upon completion of this unit the student will be able to:

a. Demonstrate how to input free form geometry in SmartCAM;
b. Demonstrate group editing commands;
c. Demonstrate how to change the path order of the part profile; and,
d. Discuss how SmartCAM creates CNC code.

Module Outline:

I. Create and Edit Complex Part Profiles
   A. Use trim profiles (GROUP_TRIM & PROFILE_TRIM)
   B. Clean up disconnected elements to an intersection (TRIM_EXTEND)
   C. Change tool properties
   D. Change geometry values (MODIFY)
   E. Arrange elements sequentially (CHAIN)
   F. Create chamfers
   G. Split elements in segments

Note: SmartCAM® commands are shown in caps.

ERIC

Step by Step

The part we must produce involves using free form geometry in its creation. We will draw this outline much like a CAD drawing, then, trim the profile to the required configuration. We will need four tools for this job: Φ.75 endmill for roughing, Φ.500 endmill for finishing, Φ.25 drill, and Φ.375 counterbore. All tools are HSS. The endmills are center cutting and have four teeth. The part will be cut from 9 x 8 x 1 6061-T6 aluminum stock.

The machining of this part will be performed as follows:

Step 1: Using tool 1: Rough outside (face rough), then, rough Φ2.50 hole (pocket rough) leaving .020 as a finish allowance.
Step 2: Using tool 2: Finish outside perimeter and Φ2.50 hole profiles.
Step 3: Using tool 3: Drill hole.
Step 4: Using tool 4: Counterbore.

Enter SmartCAM graphic area and let's start.

STEP 1: Create job file

1. File → New You get a dialogue box asking for the name of the job file to be used. However, we have not as yet made one, so, click on "New JOF" to open the Edit Job Info dialogue box. In the dialogue box, leave all defaults except:
   Created by: Enter your name
   Machine File: MATSUURA
   Part Description: Free form geometry
   Material Desc: 6061-T6 Aluminum
   Notes: Up to you, whatever seems appropriate.
   Close → Save info before closing? → Yes

   You have only created Job Information. We must now create the steps with their tools.

   Refer back to demo 1 for information on creating the endmills. I will leave that part to you. Speed and feed data for .75 diameter endmill (roughing) is 400 SFPM and .005 IPT; for the .5 diameter endmill, 800 SFPM and .002 IPT. Additional data for the endmills (and hole tools) can be found in the job file printout following this narrative.

The following information creates the drill and counterbore tools.

2. File → Job File → Add/Edit step. The "Add/Edit Step" dialogue box appears. Notice "Step" defaults to step 3 and we are in New_Step mode. There are two key areas for defining a step. **TI ID** (Tooling Identification) and **Op ID** (Operation identification). TI defines the type of tool (endmill, drill, etc.), diameter, length, and so on. Op ID defines the type of operation (milling, drilling, etc.), roughing or finishing, speeds and feeds.

   Click on "TI ID". Now click on "Edit Page". The "Add Tooling Page" appears. In the dialogue box:

   Hole Tools: Click on
   TI Section: Click on "Twist Drill"
   Accept

   Now the "Tooling" dialogue box appears. "Tooling ID" defaults to Twist Drill.1, this is OK. In the dialogue box:

   Description: .25 dia drill
   Comment: Drill
   Tool Diameter: .25
   Overall Length: 3.0
   Leave all others with either
   no entry or as defaulted
   Close → Save info before closing → Yes

   Number of Flutes: 2
   Tool_Matl: HSS
   Flute length: 2
   Tool Point Angle: 118°

   Back at the Add/edit step dialogue box, enter a "Present Length" of 1.5

   Now, let's deal with operation ID. Click on "Op ID", then click on "Edit Page". The "Add Operation Page" appears. In the dialogue box:

   Hole Processes: ON
   Op Section: Drilling
   Accept

   Now, the "Operation" dialogue box appears. "Operation ID" defaults to DRILLING.1, this is OK. Before we proceed, we must make speed and feed decisions. The part material is 6061-T6 Aluminum. Checking Machinery's Handbook, or suitable source, indicates that for drilling aluminum with a .250 dia HSS drill, a speed of 220 Surface Feet per Min. and a feed of .001 inches per revolution are recommended. So, In the dialogue box:

   Speed SFPM: 220 RPM: see note
   Primary Feed IPR: .001 IPM: see note IPT: see note

   Note: RPM (revolutions per minute), IPT (inches per tooth) and IPM (inches per minute) all update automatically following entry of SFPM and IPR data.

All other items, accept as defaulted.
Close. → Save info before closing? → Yes

You are now back to the "Add/Edit step" dialogue box. Click on "New Step". Step 4 registers. Repeat the same procedure as above for the counterbore step. The counterbore step includes the following data: In the "Add Tooling Page", TI Section = Counterbore; Tool diameter = .375, Overall length = 3.0, Preset length = 1.5, Pilot diameter = .125, Pilot length = .25, 2 Flutes; in the "Add Operation Page", Op Section = counterboring; For counterboring with a .375 dia HSS tool use a speed of 220 Surface Feet per Min. and a feed of .003 inches per revolution.

Following completion of the fourth step, save your work. File → Save as. In the dialogue box:
P.M. file: a:\demo2 (P.M. means process model, your graphics)
Job File: a:\demo2
Make sure "both" is ON. This will save graphics and job file together.

A print out of the Job file can be found at the end of this narrative.

STEP 2: Setting up view screen

1. Let's set the screen size to be compatible with our drawing dimensions:

   VIEW → ENVELOPE In the dialogue box:
   MINIMUM: X -1 Y -1 Z -1
   MAXIMUM: X 9.5 Y 8.5 Z 1 (Stock size is 9 x 8 x 1)

   Remember: Use mouse to click on any value to enter or change.
   Note that min values need a negative sign !!

   When all values are entered, hit ACCEPT.

2. Let's establish this envelope as the base view, then give the view a name to facilitate changing views. VIEW → BASE. Then, VIEW → NAME VIEW → TOP2 <ENTER>

3. We will now set some display parameters. Utility → Display modes
In the dialogue box, accept all defaults except:
   Thickness: turn on
   Draw tools: Set to "no tools"
   Accept.

STEP 3: Free form geometry for perimeter

1. In SmartCAM we draw the FINISH profiles first. In other words, simply draw the part as shown. Therefore, we need to call up the finish step (step 2 using tool 2) and assign the appropriate properties.

   You will note that the geometry has many undefined points of tangency. We will draw the part in free form style, then trim to the required configuration.

   When performing free form geometry, showing the tool on each geometry is confusing. This is why we turned off the display of tools using display modes.

   The part will be cut in a clockwise direction. Note that the thickness of the part is .500.

   INSERT → With Step → Click on step 2 (in lower right of screen)
   Enter the properties: OFFSET: Left
   LEVEL: -.50
   CLEAR: .25
   PROF_TOP: 0 (Click it on first)

   Note: The Sequence segment (Before/After) is meaningless when we are entering the first elements. So, we simply accepted the default of After element 0

2. Now it's time for geometry. CREATE → GEOMETRY → LINE

   Remember, the dialogue box is mouse active. You can click on any blank to enter data. Note that the Z has already been defaulted to -.50 This was set at Level during Insert.

   Enter: Start Point: X 0 Y 0
   End Point : X 0 Y 4

   The first line is drawn. Notice that when SC is close to drawing your line, an asterisk (*) appears. This means that one more piece of data will trigger a line.

3. For the second element, an arc, the end point is not defined! The arc starts tangent to a line (the one we just drew) and ends tangent to another line. Therefore, we can draw a circle and trim later. A good rule of thumb is, if a center of an arc is defined, create a circle and trim later. This arc's center is at X .38 and Y 4

   Geometry → Arc
   In the dialogue box:

Direction: CW
Radius: .38
Center point: X .38 Y 4
Click on "Full Arc" to draw the circle
Reset

Whenever you create an arc (circle) make sure you RESET the dialogue box. If not, you remain in the Full Arc mode forever!

4. The next element is a line which is tangent to two arcs. We can not draw the line without the second arc. So, seeing that the center of the second arc is defined at X 4.25 Y 4.75 let's make another circle:

The arc dialogue box is already present:

In the dialogue box:
Direction: CW
Radius: .75
Center point: X 4.25 Y 4.75 (you can enter 5.5 - .75 and SmartCAM will calculate the answer)
Click on "Full Arc" to draw the circle.
Reset

The screen now looks like fig. 1

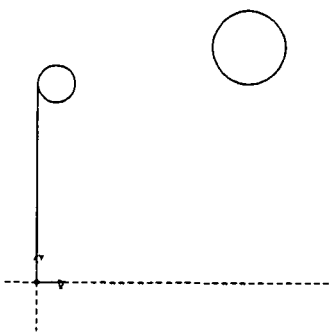

Figure 1

5. Now the tangent line.

Geometry → line:

In the dialogue box, find the words "Tan Arc" . Under Tan Arc you will see Start: and End: What this means, is, you may draw a line which STARTS

tangent to an arc or circle and/or ENDS tangent to an arc or circle. In our case the line starts tangent to the .38 R and ends tangent to the .75 R.

In the dialogue box:

Under the Tan Arc, click on the word "Start:"
Select the .38 R circle. (Pick the circle in the area where the line is tangent. That is, the 12:00 quadrant of the circle.
Click on the work "End:" (It probably will default anyway)
Select the .75 R circle. (Pick the circle in the area where the line is tangent. That is, the 12:00 quadrant of the circle.)

The line is now drawn. See fig 2

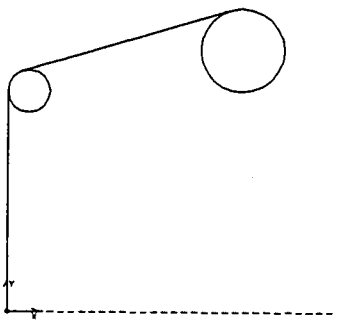

Figure 2

6. The next element is another .75 R arc, but, the direction is CCW. Again, a center is defined so we will draw a circle.

Geometry → Arc

In the dialogue box:

Direction: CCW (Remember our cut direction)
Radius: .75
Center point: X 5.75 Y 4.75 (you can enter 5.5 - .75 and SmartCAM will calculate the answer)
Click on "Full Arc" to draw the circle
Reset

7. The next arc is a 1.50 Radius. It starts tangent to the previous arc and ends tangent to a vertical line. The center X is known, but the center Y is not defined. If only the vertical line was there, we could slap in the arc using start tan and end tan. So, let's put the line in:

Geometry → line

Start point: X 8.0 Y 5.0
End point: X 8.0 Y 0

The line is shown in fig 3

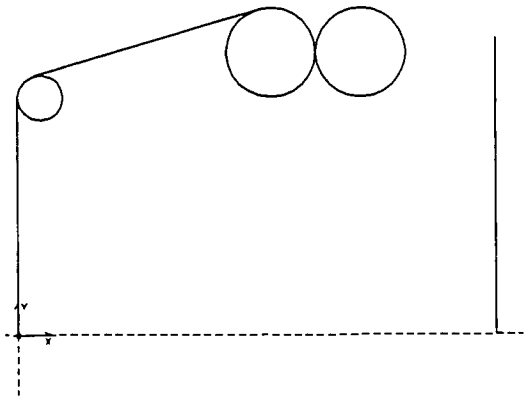

Figure 3

Note that we have drawn the line keeping our cut direction the same. We don't know the exact start point in Y, but we can trim later.

8. Now the 1.5 R

Geometry → arc

In the dialogue box:
Direction: CW
Radius: 1.5
Under "Tangent El" -- Click on S: and pick the .75 R circle
Click on E: and pick the vertical line drawn in step 7
The arc is drawn.

The arc is shown in fig. 4

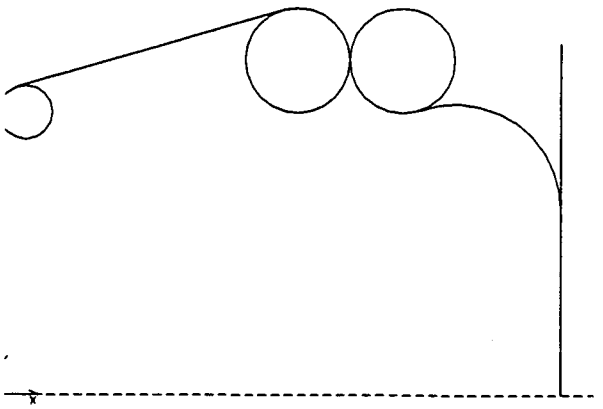

Figure 4

For the record, this works similar to the line command. The "Tangent El" (tangent to an element) section is for drawing arcs tangent to existing geometry. The S: means the Start of the arc, the E: means the end of the arc, and the I: is if an intermediate point is known. Using all three S,E,I you could draw an arc tangent to three lines.

Always remember, data in these dialogue boxes can be entered in any order. Just click on the info you know and enter data. For example, you may know an arc with a know R and direction. It may start tangent to either an arc, circle or line, but it may end at a known End Point (X,Y) It DOES NOT HAVE TO END TANGENT TO SOMETHING!! So, study your geometry well. DON'T let SmartCAM force you into putting in data you do not know.

9. Need a line from X 8, Y 0 back to origin.

Geometry → Line

In the dialogue box:

Start point: Click on words "start point" and pick end of the last line.
(The coordinates appear: X8 Y0)
End Point: Enter X 0 and Y 0

10. Need 1.75 R circle

Geometry → Arc

In the dialogue box:

Direction: CW (Remember our cut direction)
Radius: 1.75

Center point: X 2.75 Y 0.75
Click on "Full Arc" to draw the circle
Reset

11. Need fillet R of .5

Edit → Geo_edit → Blend

In dialogue box:
Set inside Radius to .5
Click on first element
Click on second element

The free form geometry for the outside perimeter is complete. See fig. 5

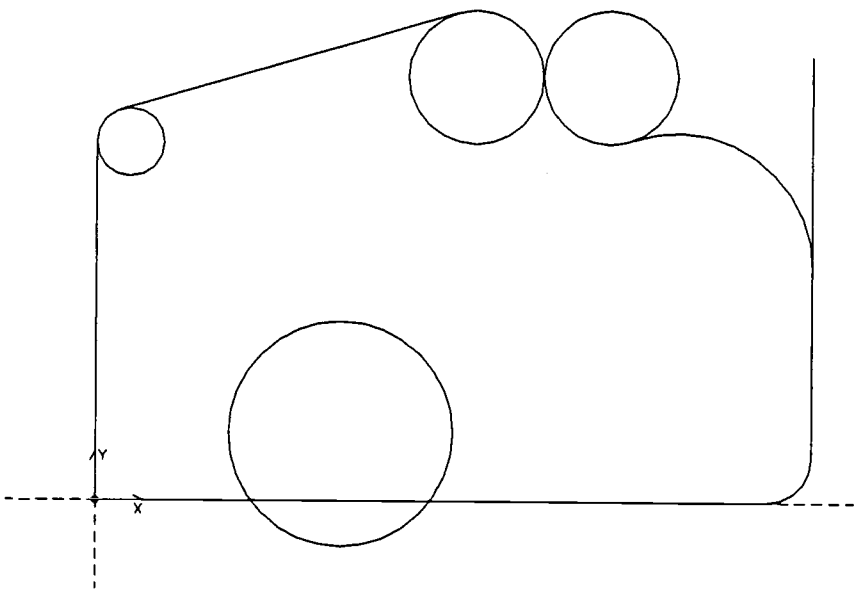

Figure 5

STEP 4: Trimming the outside profile

Now is the time to trim the outside profile. SmartCAM has two commands for trimming: Profile_trim and Trim/Extend.

Let's do **Profile_trim** first.

Profile trim acts upon a range of elements, therefore, a group is required. The command then decides if the profile is to be trimmed to the left or the right, then trims the profile into a continuous path. This command is more powerful than

trim/extend command. The trim/extend command works on only two elements at a time and may take two or even three iterations to trim completely.

However, profile trim has a few pit falls. As you can only trim to the left or right, you must trim your path in stages.

In addition, possible trim failures can occur if:

a. The elements are not grouped correctly;
b. Z levels vary among the elements; or
c, The direction of cut varies among the elements.

However, because it is a great time saver, it is always the first choice. If the frustration level gets too high, go to Trim/Extend.

Let's look at our first group of elements to trim. Starting from the first vertical line, we notice the .38 R must be trimmed to the right. The tangent line follows which is OK. Then we have a .75 R CW arc which needs to be trimmed to the right of the profile. Next is the .75 R CCW arc, but, this needs to be trimmed to the **left** of the profile. Therefore, we must stop here to perform our first trim group.

Group - Element

My rule of thumb is to pick one element before the first trimmable and continue picking elements up to one beyond the last trimmable. Therefore, pick the vertical line, .38 R, Tangent line, .75 R CW, and the .75 R CCW. See fig 6

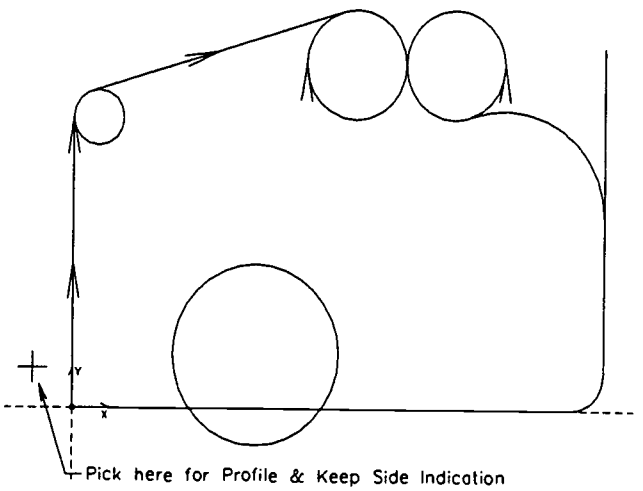

Figure 6

Edit - Geo_edit - Profile_trim

In the dialogue box:

Click on "Profile and keep side indication". Turn Snap Off and pick a point near the beginning of the vertical line and to the left of it. (See note which follows. The pick point is shown in fig. 6)

Leave intersection tolerance at .001. (This is only used if your geometry has gaps such as a translated AutoCAD drawing).

GO

The trim occurs. See fig 7.

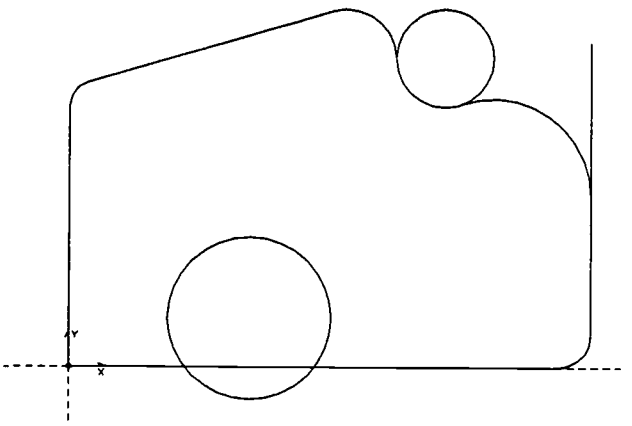

Figure 7

Note: Profile and keep side indication is doing two things. You are picking near the FIRST element in this trimmable group. That is, you are telling SmartCAM where to begin the profile. Second, you are telling SmartCAM what SIDE of the profile to KEEP. We want to trim to the inside or right of the profile, therefore, we wish to keep the outside or left of the profile.

Before you hit new group to cancel the group, note that the direction of the .75 R CCW arc has been changed as a result of the trimming!! If this was not corrected before the next profile trim was tried, you would fail miserably!! That is, the arc direction is no longer compatible with the direction of cut of the 1.5 R and next line.

So, Edit → Geo_edit → Modify

Pick the arc, a dialogue box appears. Change the arc's direction to CCW. Accept

Now we can group the next batch of trimmables:

Group → New Group → element

Pick the .75 R CW arc, the .75 R CCW arc, the 1.5 R, the vertical line, and the .5 blend Radius. Remember, one element before the first trimmable and one element beyond the last trimmable. The group is shown in fig. 8

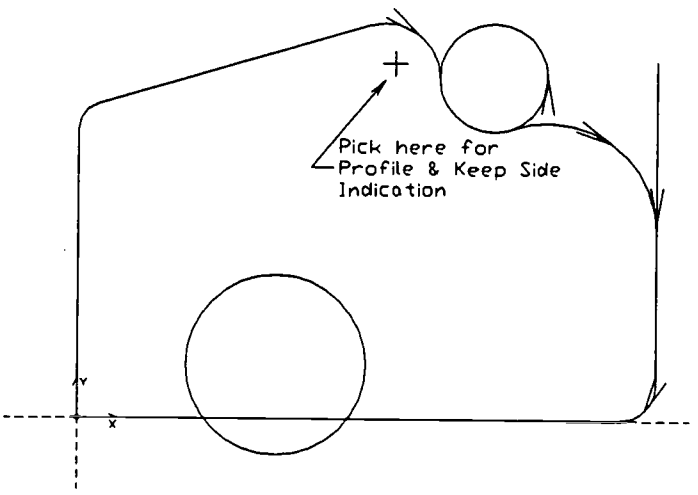

Figure 8

The 1.75 R and the last horizontal line must be trimmed to the left, and must be done as our next trimming.

Edit → Geo_edit → Profile_trim

In the dialogue box:

Click on the **words** "Profile and keep side indication" to get coordinate mode.

Make sure snap is off

Pick a point just under the .75 R CW element (see fig 8) [This indicates we will keep to the inside or right of the profile]

Leave intersection tolerance as .001

GO

We now have fig. 9

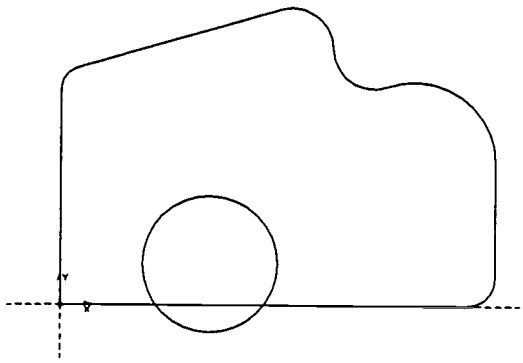

Figure 9

Finally, Group → New Group → element

Pick the .5 blend R, the 8 inch horizontal line, the 1.75 R circle, and the first vertical line.

Perform the profile trim, picking a point to the left or outside of the .5 R, indicating the profile is trimmed on the inside.

GO and the profile is trimmed. See fig. 10

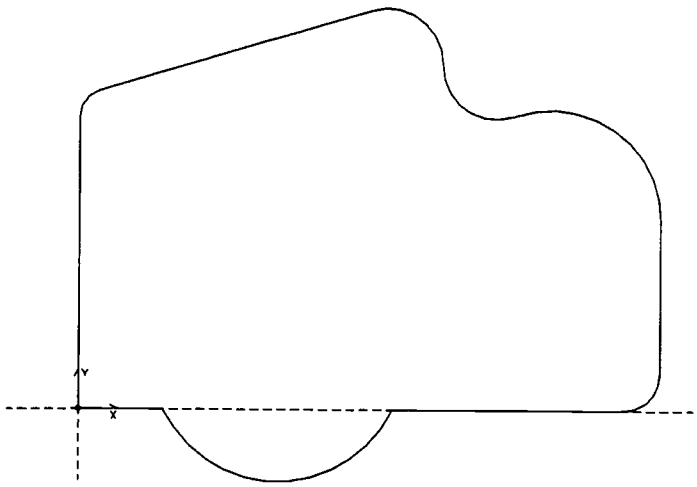

Figure 10

Trim/Extend Command --

A good alternative to profile trim is trim/extend. This command is performed by picking two elements. The first element trims with respect to the second. You may need several iterations to get the final geometry you want, but it may be less frustrating than profile trim.

Fig. 10A shows the pick points for trim/extend.

Edit → Geo_edit → Trim/extend

In the dialogue box, you see: Select First element, select second element, and the which solution box. Note also that the keep side is determined by the mouse. This means, that WHERE you pick an element, is WHAT gets kept!

Confusing? That is why there is a "which solutions" switch. Turn this on (x in the box) before you pick the two elements and SmartCAM will provide a which solution box. You may toggle through by hitting NEXT until the best solution appears. Remember, you may need to perform more than one trim to accomplish your task.

Let's do the .38 R

Make sure you have a cursor for select first element and pick the .38R arc as shown in fig. 11. Now, for select second element, pick the vertical line. The arc trims as shown in fig 11. Note that this is not complete, therefore, pick the arc again (same location as you just did) and now pick the tangent line. The trim occurs.

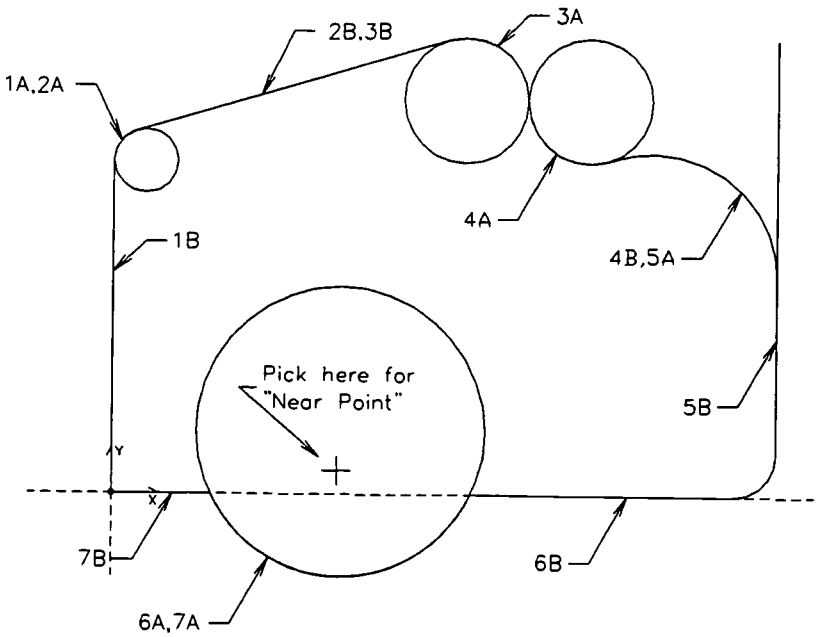

Figure 11

Figure 11 walks you through the entire part. Please note that *what to pick* as well as *where to pick* is documented.

Legend

1A,1B: The 1 means first pick group	The A means first element picked
	The B means second element picked
2A,2B: The 2 means second pick group	The A means first element picked
	The B means second element picked

Etc.

You will do fine until you reach the horizontal line going through the 1.75 R. No matter what you do, you will be forced to redraw part of the horizontal line, unless you split the line in two parts.

Edit → Geo_edit → Split

In the dialogue box:

Click on "Nearest point"
Click on the words "Near Point" to go into coordinate mode, shut off snap, and pick a point somewhere in the middle of the 1.75 R circle. (See fig. 11)
Click on "Select Split Element" and select the horizontal line.
The split occurs.

You may now proceed with trimming as shown in fig 11.

STEP 5: Checking the cutter path of the trimmed profile

If a Show path is performed, you may notice that your trimmed profile is out of sequence and/or the tool cuts on the wrong side (wrong offset).

SmartCAM's Order Path → chain command is the fastest way to link unsequenced elements into a continuous path.

Edit → Order Path → Chain

The dialogue box reads "select an element in profile". Simply pick the first vertical line we drew and the elements will be arranged in order. Perform a show path to verify.

You will find that Chain does not fix offset problems. This must be done using Property_chg.

Group → New Group → Profile Pick outside profile to form group. (Why waste time picking specific elements for change, when the whole profile wants the same offset.)

Edit → Property_chg → toolpath

In dialogue box:
Change offset to left
Accept

Perform show path to verify.

STEP 6: Cutting the 2.50 diameter hole

We will decide to cut the large hole in a CCW direction. Therefore, the tool and offset remain unchanged from the outside perimeter. The Z level is the same and we will keep Prof_top and clearance the same. Therefore, we can go right to the Geometry command.

Geometry → Arc

In the dialogue box:
Direction: CCW (Remember our cut direction)
Radius: 1.25
Center point: X 2.75 Y .75
Click on "Full Arc" to draw the circle
Reset

A word on full arcs (circles): SmartCAM will draw these starting at the 3 o'clock position. This is unchangeable! The significance of this will be realized when the Lead in/out is added.

STEP 7: Drill and Counterbore.

INSERT → After → Step_seq 2 → With Step 3
Enter the properties: LEVEL: 0
CLEAR: .25

For hole operations (e.g. drilling and counterboring), offset and prof-top are not used. With prof_top out of the picture, how does the system know where the drilling **begins**? The answer is, the Z level. The **depth** of the hole will be entered in the "hole" dialogue box.

Create → Geometry → Hole

In the dialogue box:

Level and Clearance should be as set during INSERT
Click on "Full_Depth" and enter .55 (.5 is the part thickness, and we add an extra .05 to ensure clearing)
Click on "Hole Point" and enter X = 6 and Y = 1.75
The hole element appears.

Please note, that the element (hole) is triggered when the coordinates are entered. So, be careful to watch your element listing for the hole element. Also, when full depth is used, SmartCAM will ensure that the full diameter of the drill goes the depth entered, while ensuring that the drill point clears.

Let's do the counterbore.

INSERT → After → Step_seq 3 With Step 4
Enter the properties: LEVEL: 0
CLEAR: .25

Create → Geometry → Hole

In the dialogue box:
Level and Clearance should be as set during INSERT
Click on "Tip_Depth" and enter .10.
Click on the words "Hole Point" and click on the hole element you just made!
The hole element (counterbore this time) appears.

Note that Full_Depth is **not** an option for Counterboring. A counterbore tool is flat. Therefore, the bottom of the tool, or tip, becomes the program point.

In the top view, the drill and counterbore appear simply as a "cross". If you look in your element listings, however, you will see that there are two hole elements, one for the drill and one for the counterbore. If you change your view to a front view, you will see a line showing the path the drill (and counterbore) will cut through the part. You will notice that the line extends beyond the bottom. This is SmartCAM compensating for the drill point. Do a show path! Also, perform a show path in the front view with Show Tool set at "Draw End". This will clearly show what the drill and counterbore are doing.

STEP 8: Inserting stock and centering the part

Let's draw the stock for this part. Stock is non-toolpath data. We will use the "on layer" option of Insert to set up a layer to draw the stock. Let's go!

Insert → After → Element_Seq (either pick or enter the last element in your data base).

Now click on "On Layer"

In the dialogue box, click on "Add Layer". Enter a number, I'll use 5, enter a color (I'll use white) and if you want, a line type. Accept. You now are working on layer 5. Just because it's non-toolpath doesn't mean there is no thickness! So, in the dialogue box make sure you set a Level of -1 and turn on Prof_top and set it to 0. After all, our stock is 1 inch thick.

Rather than use the Geometry command, let's use the rectangle command to speed things up.

Create → User_elements → Rectangle

Enter X 0 Y0 as the start corner (Notice the Z is already -1). Length is 9.0, the Width is 8.0, the angle is 0, and the corner radii are 0. Hit Go, the rectangle (stock in our case) is draw CCW.

Notice SmartCAM leaves the rectangle in a Group (See the arrows). You must hit Group → New Group to cancel the group.

Let's now center the part in the stock. Group the part. The fastest way is to use the Step option of group and pick steps 2, 3, and 4 individually from the view box.

Edit → Transform → Move

For from point, the easiest thing to do is to click on From 0. You now get From point: X0 Y0 Z0. For To point: X .50 Y1.75 Z0 will center the part. A comment on the numbers: the part is 8 x 6.5 (don't forget the 1.75 R on bottom) and the stock is 9.0 x 8.0; so, to center the part from X0 Y0 we need to move .5 in X. For Y, 8 minus 6.5 is 1.5. 1.5 divided by two is .75. We must move the part .75 plus the amount we are below zero. Therefore, 1 + .75 is the move.

The stock is shown centered in fig. 12.

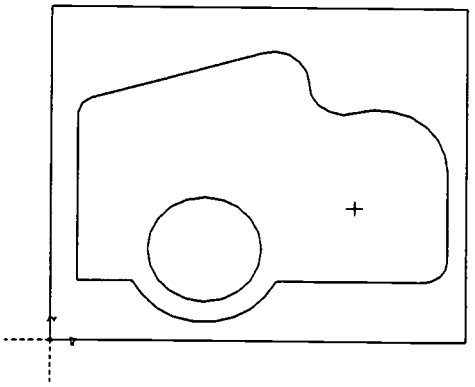

Figure 12

A comment about the Z. If Z = 0 is the From point, there will be NO Z movement providing that the To point for Z is also 0. In other words, if we made the to-point Z = -.25, the part would move from Z0 to Z-.25. Not a good thing for this application.

STEP 9: Roughing

Let's think about roughing this part. First, we must rough around the perimeter of the part. Then we must rough the 2.50 dia hole. The perimeter is a FACE roughing, and the 2.50 dia hole is a POCKET roughing. We will use SC's Process → rough for the job.

Insert → Before → Step_Seq 2

This command will ensure that the roughing step will occur before the finish step.

There are other ways to set-up the insertion point.

Insert → After → Element_seq 0

Obviously, if something occurs after element 0 (The origin) it will occur first.

Insert → Before → Element_seq 1

Again, the roughing will occur first thing.

I don't care how you mark the insertion point as long as it is correct.

Now, let's set up the step and its properties:

Click on "With step" and either enter 1 or pick step 1 from the view list. Offset and level are determined by SC during roughing, therefore, the setting is not read. Prof_top on and 0 Clear .25 (Offset and level are ignored during roughing, but prof_top and clearance are included)

Process → Rough → Face

Before we go to far, notice that our part is in the way of the face roughing and if not accounted for would be wiped out! Therefore, we must group the outside profile of the part as an island before we rough.

Group → Profile → Pick outside perimeter

Now, seeing that we have an island, we would like to include a semi-finish or "final island pass" as part of our roughing.

Click on "Linear Parameter". In the dialogue box:
Click on "Final pass"
Accept

Back to the face roughing dialogue box:

Face: Zig Zag	Outside Boundary: pick the stock	First pass level: -.25
Click on "Group Island"	Width of cut: .70	Depth of cut: .25
	Pass Angle: 0	Final pass level: -.5
	Finish Allowance: .020	
	Boundary Clearance: 0	
Leave all other parameters at their defaulted settings or values		
GO		

The roughing occurs.

Now let's rough the 2.50 diameter hole:

There is no island involved, so make sure you have no groups active. Group → New Group.

Also, Click on "Spiral parameters" and ensure that "Final island pass" is **off**.

Process → Rough → Pocket

In the dialogue box:

Pocket: Spiral	Outside Boundary: pick the profile	First pass level: -.25
	Width of cut: .70	Depth of cut: .25
	Pass Angle: 0	Final pass level: 0.5
	Finish Allowance: .020	
Leave all other parameters at their defaulted settings or values		
GO		

The roughing occurs. Make sure you check you views. The front view clearly shows the two pass for depth of cut.

STEP 10: Lead in/out

Lead in/out is an edit command. They are performed using Geo_edit which lives under the Edit command of the top menu bar. Because this is an edit command we do not have to go through Insert to set up sequencing and step properties. Also, angle 0 is no longer at 3:00, rather it is a function of the profile.

Edit → Geo_edit → Lead in/out

Notice you can perform a lead in alone, a lead out alone, or both simultaneously. Because the angle 0 is unique, we can do both at once. When do we use line and when do we use arc? A good rule of thumb is if the first element is a line, then lead in with a line. If the last element in the profile is a line, then lead out with a line. If the first element is an arc, then lead in with an arc. If the last element in the profile is an arc, then lead out with an arc. However, if a line is split in two and it is necessary to blend these two lines during lead in and lead out, you must use arcs. You will always know the first and last elements by either watching your show path or using Utilities → Element_data to find which element is which. For the outside profile, we can lead in and out with a line.

First, let's unclutter the screen by masking step 1. Utilities → Show/Mask.

In the dialogue box:
- Click on "hide"
- Click on "step"
- 1 <Enter>
- Accept

Edit → Geo_edit → lead in/out

In the dialogue box:
- Click on "line"
- Click on "both"
- Angle: 0. This means the lead in and/or out will follow the profile.
- Length: 1
- "line offset match" is OFF

Click on "Select element in profile" and select the outside perimeter. The lead in/out appears.

Repeat the procedure for the 2.50 diameter hole. However, we must lead in and out with arcs. Start by clicking on Arc. For angle, 45 works well. For radius, 1 will give decent results. You can play around with these values (using Undo) until you are happy. Figure 13 shows the results in a windowed view. Notice, for the large hole, the lead in and out occur at the 3:00 position.

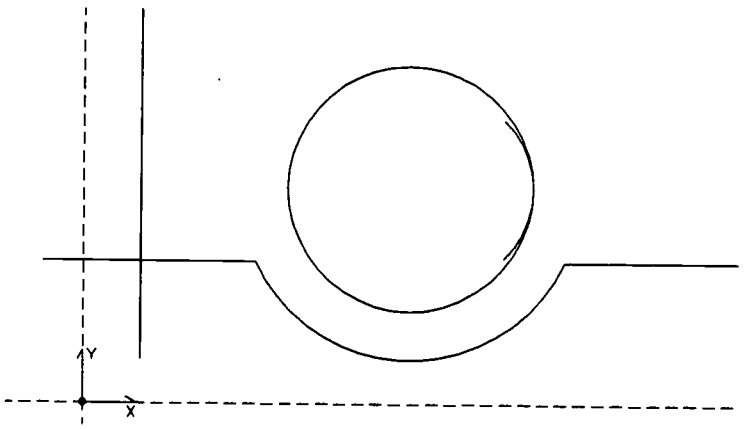

Figure 13 (Roughing step masked for clarity)

STEP 11: Insert tool home point for step 1

We will use X -1 Y 2.5 Z .5 for the tool home point.

Insert → After → Element_seq 0. I hope this is making sense by now--After element 0 ensures the tool home point is first. Also, note that this pushes the roughing down. That's O K, our sequence of events will come out correct. Tool home, rough, finish, drill, and counterbore!

Enter step properties: with step 1, Level .5, clear .25

Offset and prof_top are not applicable for points, so ignore the settings.

Create → Geometry → Point/Rapid

Enter an X of -1, notice you are being asked for a Y. Also, notice that an * appears next to the Y. Once you enter a Y value the point will trigger. Once the point triggers, the Y clears but the X doesn't. So before you go ahead a re-enter your Y value, check your elements and see if you now have a point as element 1!

STEP 12: Code

If you made it this far, the worst is over. Coding is the easiest but most important part as this is the instruction to a computer driven machine tool to cut your part.

Process → Code

For output file, when using the Matsuura, use your graphics name with no extension. For example, if I am working on A:\DEMO2.PM4, and I have a job file called A:\DEMO2.JOF, I would call my code output file A:\DEMO2

You need to enter the proper machine and template files.

For smf file enter H:\matsuura
for tmp file enter H:\matsuura

Hit start and the code file is created.

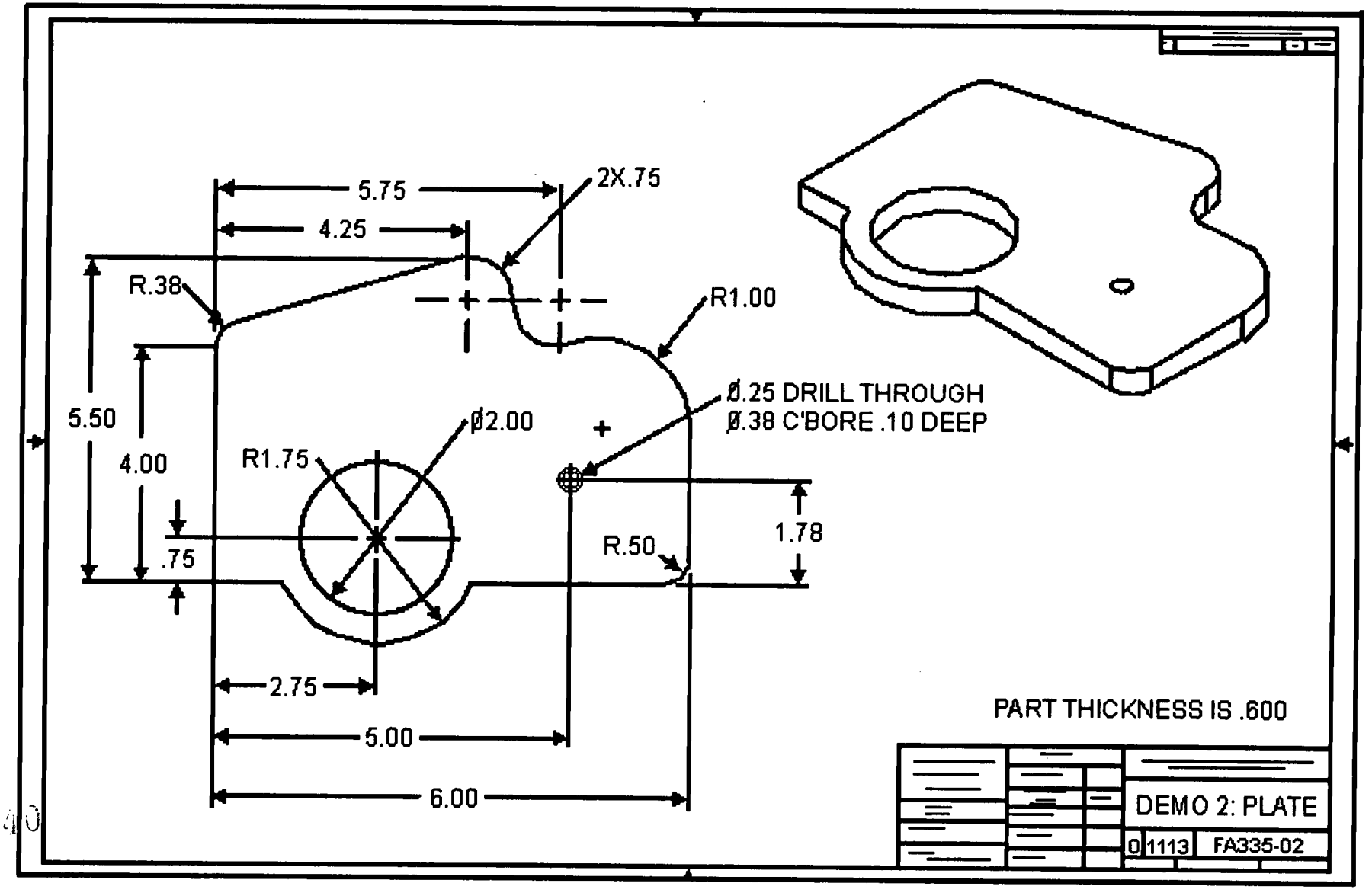
5.75
4.25
2X.75
R.38
R1.00
5.50
4.00
Ø2.00
R1.75
Ø.25 DRILL THROUGH
Ø.38 C'BORE .10 DEEP
1.78
.75
R.50
2.75
5.00
6.00
PART THICKNESS IS .600
DEMO 2: PLATE
0 1113 FA335-02

LSR-J5-LE
Create and Edit Complex Part Profiles
Attachment 3: **MASTER** Laboratory Exercise

Successful completion of this technical module will be based on the students' successful completion of the following components:

a. Demonstrate how to use editing commands to trim profiles into continuous toolpaths;
b. Demonstrate how to modify geometry and tooling properties;
c. Demonstrate how to create a continuous profile using CHAIN;
d. Demonstrate how to split elements; and,
e. Demonstrate how to create chamfers.

Note: SmartCAM® commands are shown in caps.

ERIC

LSR-J5-LW1
Create and Edit Complex Part Profiles
Attachment 4: **MASTER** Laboratory Worksheet No. 1

Use SmartCAM to create the necessary tool paths to obtain CNC code required for manufacturing the part shown below. The part is .500 inches thick. The material is Aluminum.

1. You will need five steps using five tools:
   a. One .375 diameter endmill for outside roughing: 4 flute, 400 SFPM, .006 IPT;
   b. One 7/16 diameter drill for "roughing" the .5 dia hole: 2 flute, 118° included angle, 225 SFPM, .006 IPR;
   c. One .250 diameter endmill for finishing the outside profile and .5 dia hole: 4 flute, 800 SFPM, .001 IPT;
   d. One .156 diameter drill: 2 flute, 118° included angle, 225 SFPM, .004 IPR; and,
   e. One .375 diameter counterbore: 2 flute, 225 SFPM, .004 IPR.

   All tools are HSS. All endmills are center cutting. Use 1 inch for each tool's preset length. Use your judgment for all other data.

2. Cut the part from 3.0 x 3.0 x 1.0 stock. Center the part in the stock.

3. Step one starts at the home position: X -1.0, Y 2.5, Z .5
   X0, Y0 is the lower left corner of the stock, Z0 is the top of the stock.

4. Perform roughing in two depths of passes taking .250 depth per pass. Leave .020 for a finish allowance. For the .5 dia hole, simply rough by drilling through with the 7/16 dia drill.

5. Provide a lead-in and lead-out for all finish passes. No plunging into material is allowed.

Hand in: This paper and graphic printout of part in isometric. Also, graphics file, job file, and code on a diskette.

ERIC

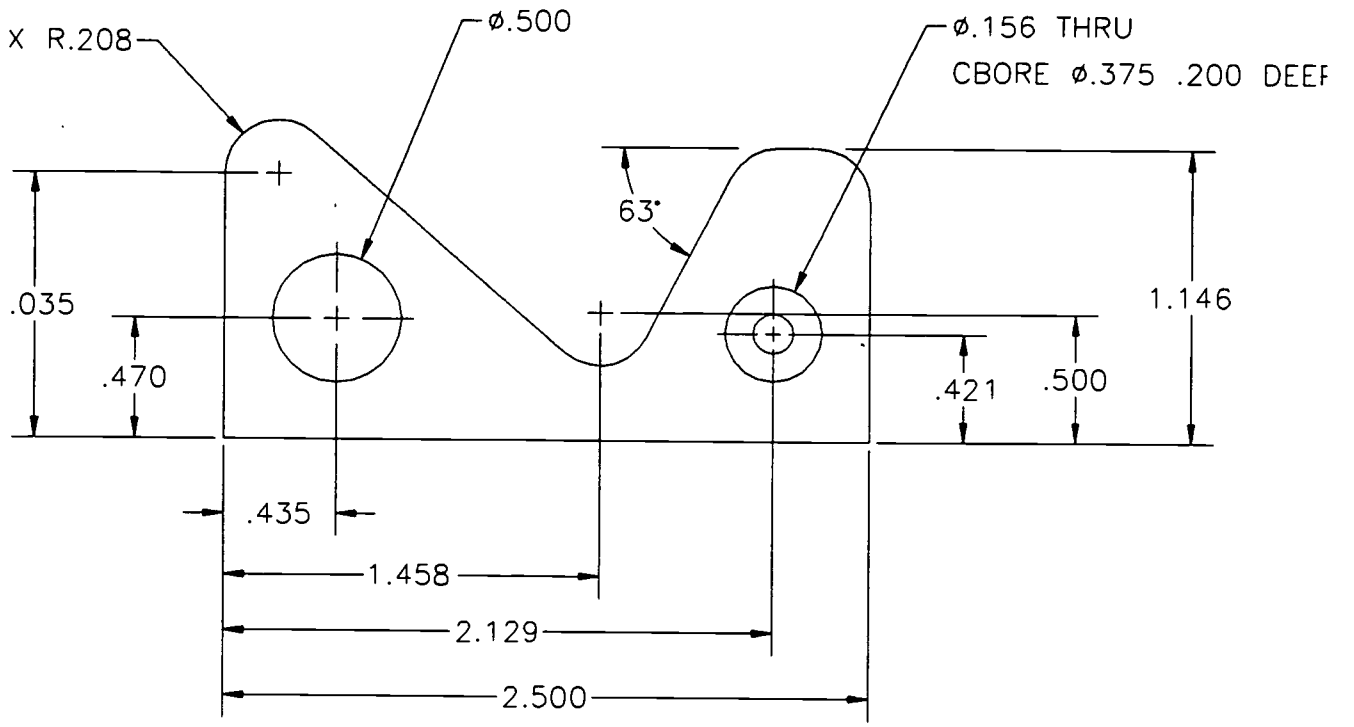
X R.208
ø.500
ø.156 THRU
CBORE ø.375 .200 DEEP
63°
.035
.470
.421
.500
1.146
.435
1.458
2.129
2.500

LSR-J5-LW2
Create and Edit Complex Part Profiles
Attachment 5: **MASTER** Laboratory Worksheet No. 2

Use SmartCAM to create the necessary tool paths to obtain CNC code required for manufacturing the part shown below. The material is 1018 steel.

1. You will need four steps using four tools:
   a. One .500 diameter endmill for roughing the outside and inside profiles: 4 flute, 80 SFPM, .003 IPT;
   b. One .250 diameter drill to prepare a hole in the .375 wide slot: 2 flute, 118° included angle, 70 SFPM, .002 IPR;
   c. One .500 diameter endmill for finishing the outside and inside profiles: 4 flute, 140 SFPM, .001 IPT; and,
   d. One .375 diameter endmill for cutting the slot: 2 flute, 80 SFPM, .002 IPT.

   All tools are HSS. All endmills are center cutting. Use 1 inch for each tool's preset length. Use your judgment for all other data.

2. Cut the part from 8.0 x 5.0 x .5 stock. Center the part in the stock.

3. Step one starts at the home position: X -1.0, Y 2.5, Z .5
   X0, Y0 is the lower left corner of the stock, Z0 is the top of the stock.

4. Perform roughing in one depth of pass taking the full .250 depth. Leave .020 on both the inside and outside profiles for the finish passes. For the .375 wide slot, drill through with the .250 dia drill to prepare a hole for the .375 dia endmill to plunge.

5. Provide a lead-in and lead-out for all finish passes.

Hand in: This paper and graphic printout of part in isometric. Also, graphics, job file, & code on disk.

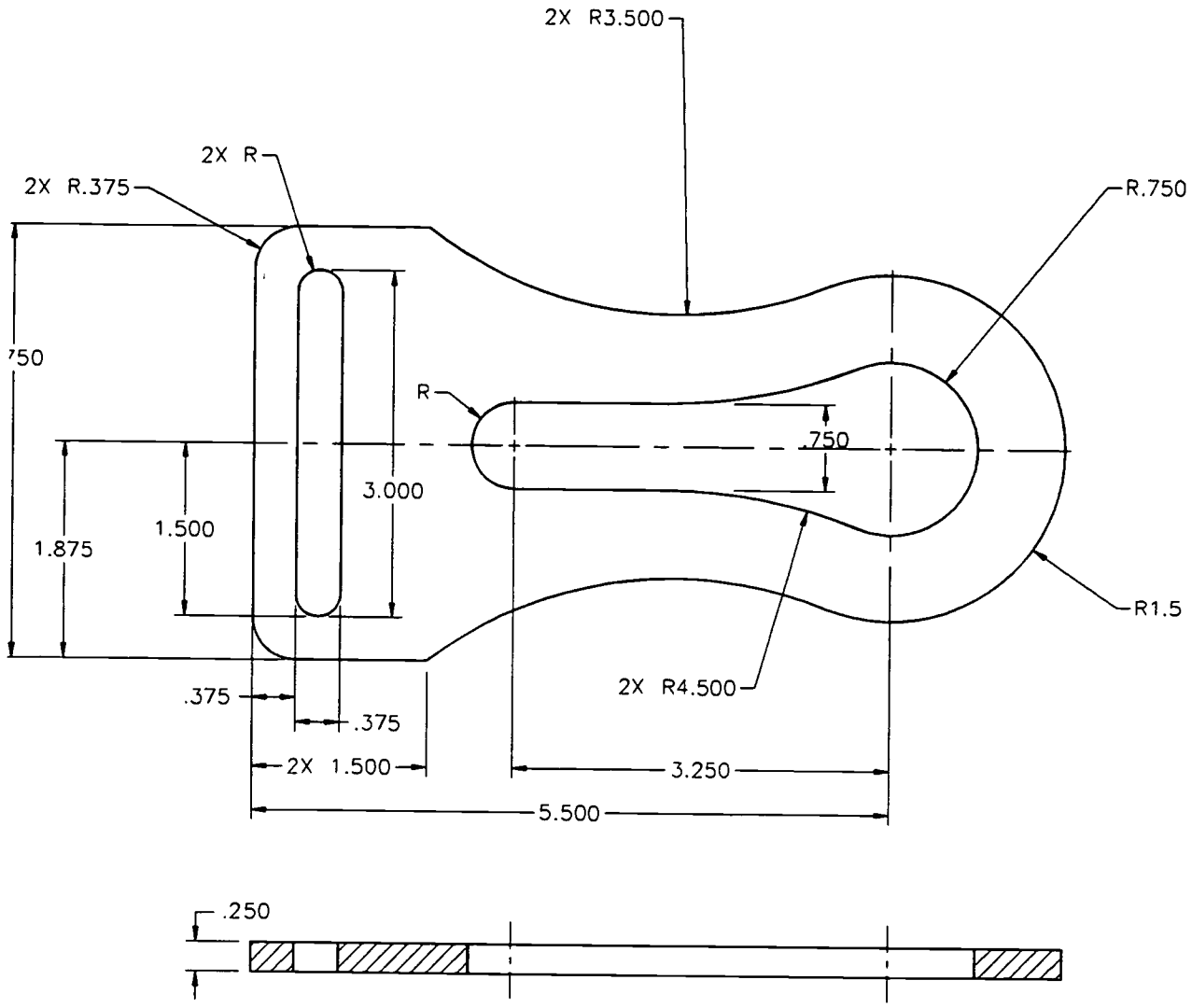
2X R3.500
2X R
2X R.375
R.750
750
R
.750
3.000
1.500
1.875
R1.5
2X R4.500
.375
.375
2X 1.500
3.250
5.500
.250

LASER MACHINING SERIES

MASTER Technical Module No. LSR-J6

Subject: Laser Machining **Time:** 5 Hrs.

Duty: Perform Computer-Aided Manufacturing (CAM)
Task: Perform Roughing, Drilling, and Counterboring

Note: SmartCAM® is being used as a typical CAM system.

Objective(s):

Upon completion of this unit the student will be able to:
a. Demonstrate how to perform face and pocket roughing;
b. Demonstrate how to perform island detection; and,
c. Demonstrate how to set hole tooling and properties.

Instructional Materials:

SmartCAM® milling and/or fabrication software Version 8 or higher
486 DX2 or Pentium computer (IBM compatible) with SVGA monitor
MASTER Handout (LSR-J6-HO)
MASTER Laboratory Exercise (LSR-J6-LE)

References:

Getting Started with SmartCAM® Milling, CAMAX Manufacturing Technologies, Latest Edition
Getting Started with SmartCAM® Advanced Fabrication, CAMAX Manufacturing Technologies, Latest Edition
SmartCAM® Milling Training Manual, CAMAX Manufacturing Technologies, Latest Edition
CNC Process Modeling using SmartCAM, Lin, Dr. S. C., et. al., Scholars International Publishing Corp., Latest Edition

Student Preparation:

Students should have previously completed the following Technical Modules:
LSR-J5 "Create and Edit Complex Part Profiles"

Introduction:

CAM programming involves an understanding of machining, computers, materials, and part processing. SmartCAM® utilizes a concept called "**The CNC Process Model**" which incorporates the creation of part geometry as tool paths and allows for change and interaction with the model. The path of the cutting tool can be viewed at any time in any number of viewing angles. Once the geometry and order of operation are complete, CNC code is generated to a file and downloaded to the machine. This code is in compliance with the specific machine on which the part will be manufactured. SmartCAM has the capability of generating code for any computer controlled machine provided that the necessary code generator files have been either created by the user or purchased from CAMAX. In this module, the student will demonstrate an understanding of how to create face and pocket roughing in SmartCAM. The student will learn how to avoid islands during roughing. Finally, the student will learn how to set up drill and counterbore tooling and create the proper hole geometry.

Presentation Outline:

I. Perform Roughing, Drilling, and Counterboring
   - A. Perform face roughing
   - B. Perform pocket roughing
   - C. Understand how to avoid islands in roughing
   - D. Set up drills and counterbore tools
   - E. Study the difference between full depth, tip depth, and spot diameter

Practical Application:

Students will observe and participate in the discussion of the topics listed above. Following the demonstrations, students will complete exercises assigned by the instructor.

Evaluation and/or Verification:

Successful completion of this technical module will be based on the students' successful completion of the following components:

a. Demonstrate how to use the facing and pocket roughing commands;
b. Demonstrate how to set up for island detection;
c. Demonstrate how to set up drilling, counterboring, and spot drilling tools; and,
d. Demonstrate how to create hole geometry and determine when to use full, tip, and spot diameter depths.

Summary:

Review the main lesson points using the suggested text(s) listed in the reference section of this module. Hold class discussion and answer student questions.

Next Lesson Assignment:

MASTER Technical Module (LSR-J7) pertaining to advanced editing of part profiles.

LSR-J6-HO
Perform Roughing, Drilling, and Counterboring
Attachment 1: **MASTER** Handout

Objective(s):

Upon completion of this unit the student will be able to:

a. Demonstrate how to perform face and pocket roughing;
b. Demonstrate how to perform island detection; and,
c. Demonstrate how to set hole tooling and properties.

Module Outline:

I. Perform Roughing, Drilling, and Counterboring
   A. Perform face roughing
   B. Perform pocket roughing
   C. Understand how to avoid islands in roughing
   D. Set up drills and counterbore tools
   E. Study the difference between full depth, tip depth, and spot diameter

Successful completion of this technical module will be based on the students' successful completion of the following components:

a. Demonstrate how to use the facing and pocket roughing commands;
b. Demonstrate how to set up for island detection;
c. Demonstrate how to set up drilling, counterboring, and spot drilling tools; and,
d. Demonstrate how to create hole geometry and determine when to use full, tip, and spot diameter depths.

LASER MACHINING SERIES

MASTER Technical Module No. LSR-J7

Subject: Laser Machining **Time:** 5 Hrs.

Duty: Perform Computer-Aided Manufacturing (CAM)
Task: Advanced Editing Of Part Profiles

Note: SmartCAM® is being used as a typical CAM system.

Objective(s):

Upon completion of this unit the student will be able to:
a. Demonstrate how to move and copy elements;
b. Demonstrate how to rotate and rotate copy elements; and,
c. Demonstrate how to create symmetrical elements using mirror.

Instructional Materials:

SmartCAM® milling and/or fabrication software Version 8 or higher
486 DX2 or Pentium computer (IBM compatible) with SVGA monitor
MASTER Handout (LSR-J7-HO)
MASTER Laboratory Exercise (LSR-J7-LE)

References:

Getting Started with SmartCAM® Milling, CAMAX Manufacturing Technologies, Latest Edition
SmartCAM® Milling Training Manual, CAMAX Manufacturing Technologies, Latest Edition
CNC Process Modeling using SmartCAM, Lin, Dr. S. C., et. al., Scholars International Publishing Corp., Latest Edition

Student Preparation:

Students should have previously completed the following Technical Modules:
LSR-J6 "Perform Roughing, Drilling, and Counterboring"

Introduction:

CAM programming involves an understanding of machining, computers, materials, and part processing. SmartCAM® utilizes a concept called "**The CNC Process Model**" which incorporates the creation of part geometry as tool paths and allows for change

and interaction with the model. The path of the cutting tool can be viewed at any time in any number of viewing angles. Once the geometry and order of operation are complete, CNC code is generated to a file and downloaded to the machine. This code is in compliance with the specific machine on which the part will be manufactured. SmartCAM has the capability of generating code for any computer controlled machine provided that the necessary code generator files have been either created by the user or purchased from CAMAX. In this module, the student learn how to save drawing time by utilizing some powerful editing commands. The student will demonstrate an understanding of manipulating tool path profiles using move and move copy, rotate and rotate copy, and finally how to perform mirroring images.

Presentation Outline:

I. Advanced Editing Of Part Profiles
   - A. Move and copy elements
   - B. Rotate and rotate copy elements
   - C. Create symmetrical elements using mirror

Practical Application:

Students will observe and participate in the discussion of the topics listed above. Following the demonstrations, students will complete the exercises assigned by the instructor.

Evaluation and/or Verification:

Successful completion of this technical module will be based on the students' successful completion of the following components:

1. Demonstrate how to use the move and move copy commands;
2. Demonstrate how to use the rotate and rotate copy commands; and,
3. Demonstrate how to use the mirror command.

Summary:

Review the main lesson points using the suggested text(s) listed in the reference section of this module. Hold class discussion and answer student questions.

Next Lesson Assignment:

MASTER Technical Module (LSR-J8) pertaining to editing of tool paths.

LSR-J7-HO
Advanced Editing of Part Profiles
Attachment 1: **MASTER** Handout

Objective(s):

Upon completion of this unit the student will be able to:

a. Demonstrate how to move and copy elements;
b. Demonstrate how to rotate and rotate copy elements; and,
c. Demonstrate how to create symmetrical elements using mirror.

Module Outline:

I. Advanced Editing Of Part Profiles
   A. Move and copy elements
   B. Rotate and rotate copy elements
   C. Create symmetrical elements using mirror

ERIC

Successful completion of this technical module will be based on the students' successful completion of the following components:

1. Demonstrate how to use the move and move copy commands;
2. Demonstrate how to use the rotate and rotate copy commands; and,
3. Demonstrate how to use the mirror command.

LASER MACHINING SERIES

MASTER Technical Module No. LSR-J8

Subject: Laser Machining **Time:** 8 Hrs.

Duty: Perform Computer-Aided Manufacturing (CAM)
Task: Edit Tool Paths

Note: SmartCAM® is being used as a typical CAM system.

Objective(s):

Upon completion of this unit the student will be able to:

a. Change tool path direction (REVERSE_ORDER);
b. Change where a profile begins. (PROF_START);
c. Change the order of machining events (SEQUENCE_MOVE); and,
d. Change the order of operation based on tooling (STEP_SORT).

Note: SmartCAM® commands are shown in caps.

Instructional Materials:

SmartCAM® milling and/or fabrication software Version 8 or higher
486 DX2 or Pentium computer (IBM compatible) with SVGA monitor
MASTER Handout No. 1 (LSR-J8-HO1)
MASTER Handout No. 2 (LSR-J8-HO2) (Editing Practice)
MASTER Handout No. 3 (LSR-J8-HO3) (SmartCAM's Step_Sort Command)
MASTER Laboratory Exercise (LSR-J8-LE)

References:

Getting Started with SmartCAM® Milling, CAMAX Manufacturing Technologies, Latest Edition
SmartCAM® Milling Training Manual, CAMAX Manufacturing Technologies, Latest Edition
CNC Process Modeling Using SmartCAM, Lin, Dr. S. C., et. al., Scholars International Publishing Corp., Latest Edition

Student Preparation:

Students should have previously completed the following Technical Modules:
LSR-J7 "Advanced Editing of Part Profiles"

Introduction:

CAM programming involves an understanding of machining, computers, materials, and part processing. SmartCAM® utilizes a concept called "**The CNC Process Model**" which incorporates the creation of part geometry as tool paths and allows for change and interaction with the model. The path of the cutting tool can be viewed at any time in any number of viewing angles. Once the geometry and order of operation are complete, CNC code is generated to a file and downloaded to the machine. This code is in compliance with the specific machine on which the part will be manufactured. SmartCAM has the capability of generating code for any computer controlled machine provided that the necessary code generator files have been either created by the user or purchased from CAMAX. In this module, the student learn how to manipulate machining events by changing tool path direction and start point. The student will also learn how to manipulate the order of machining events by changing the sequencing of elements and the step order of the tooling.

Presentation Outline:

I. Edit Tool Paths
   - A. Change tool path direction. (REVERSE_ORDER)
   - B. Change the start of a profile (PROF_START)
   - C. Change the order of machining events (SEQUENCE_MOVE)
   - D. Arrange elements by tool. (STEP_SORT)

Practical Application:

Students will observe and participate in the discussion of the topics listed above. Following the demonstrations, students will complete projects assigned by the instructor.

Evaluation and/or Verification:

Successful completion of this technical module will be based on the students' successful completion of the following components:

a. Demonstrate how to reverse the machining direction a profile;
b. Demonstrate how to change where a machining profile begins;
c. Demonstrate how to arrange the sequencing of machining events based on how the steps (tools) in the job file were created; and,
d. Demonstrate how to maneuver the sequencing of machining events by grouping, setting a new location in the data base, and initiating the Sequence Move command.

Summary:

Review the main lesson points using the suggested text(s) listed in the reference section of this module. Hold class discussion and answer student questions.

Next Lesson Assignment:

MASTER Technical Module (LSR-J9) pertaining to using construction layers in SmartCAM.

LSR-J8-HO1
Edit Tool Paths
Attachment 1: **MASTER** Handout No. 1

Objective(s):

Upon completion of this unit the student will be able to:

a. Change tool path direction (REVERSE_ORDER);
b. Change where a profile begins. (PROF_START);
c. Change the order of machining events (SEQUENCE_MOVE); and,
d. Change the order of operation based on tooling (STEP_SORT).

Module Outline:

I. Edit Tool Paths
   A. Change tool path direction. (REVERSE_ORDER)
   B. Change the start of a profile (PROF_START)
   C. Change the order of machining events (SEQUENCE_MOVE)
   D. Arrange elements by tool. (STEP_SORT)

LSR-J8-HO2
Edit Tool Paths
Attachment 2: **MASTER** Handout No. 2

Editing Practice

Create a job file with a .5 diameter endmill and work through the following exercise.

1. Use the **Rectangle** command to create the 6 X 4 Rectangle as shown in figure 1.

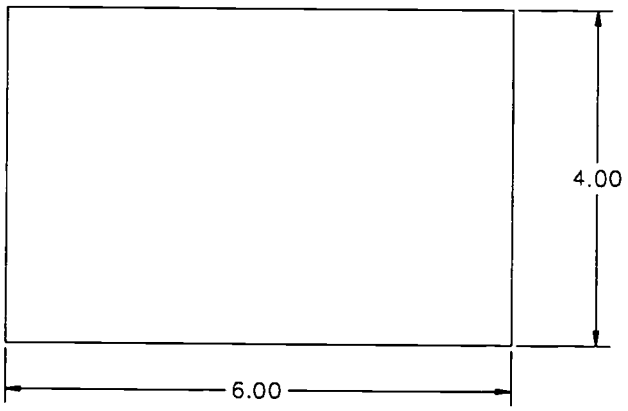

Figure 1

2. All a 1.00 diameter arc. First draw a full arc (i.e. circle), then use **Profile_Trim** to edit. Then, add chamfer as shown in figure 2.

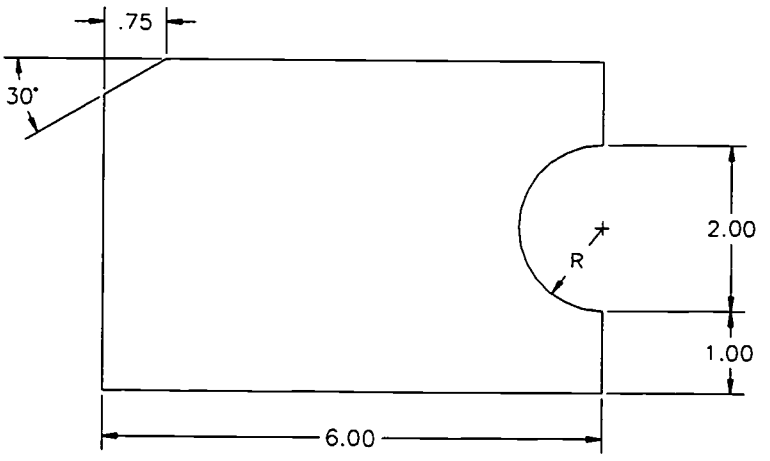

Figure 2

3. Use **Geo_Edit >> Modify** on two lines to create "house" as shown in figure 3.

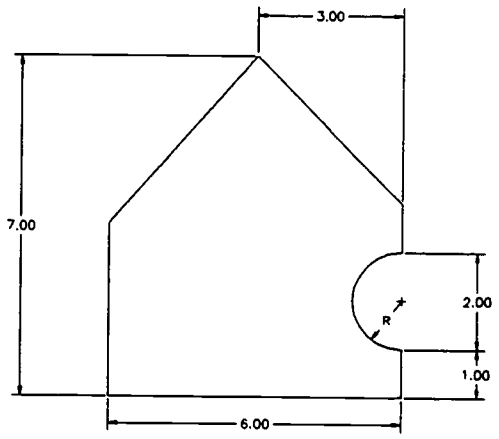

Figure 3

4. Mirror the object about X = 6.5 to create figure 4.

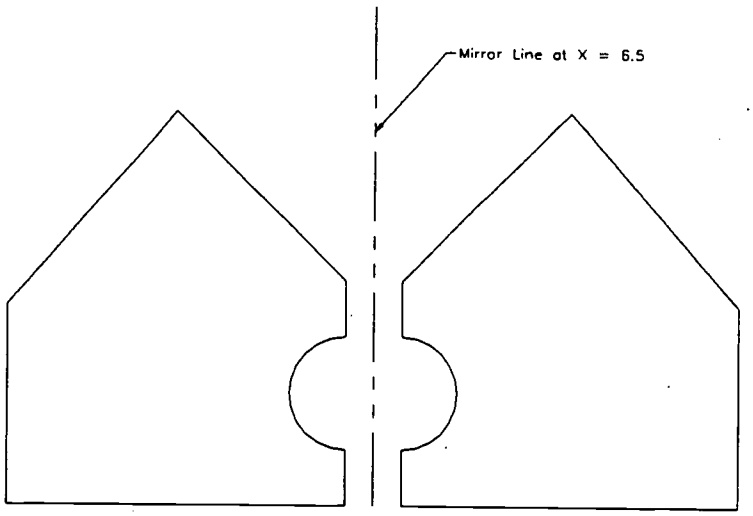

Figure 4

5. Use the **Rotate** command (making sure copy is on), then use **Move** to create figure 5.

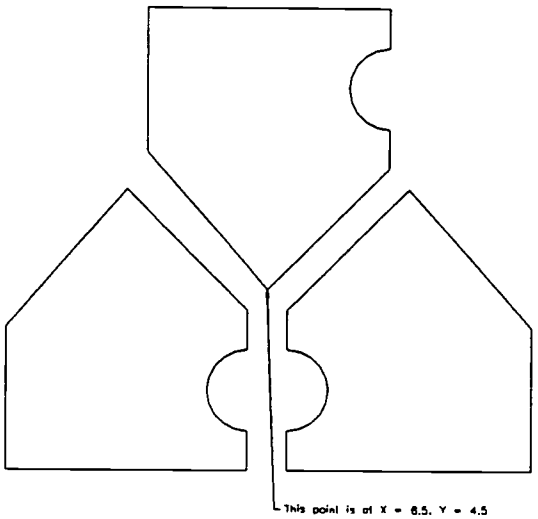

Figure 5

6. Note the current cut direction the three objects as shown in figure 6. Perform a **Show_Path** to verify.
   a. ***Make all objects go clockwise.*** Use **Edit >> Order Path >> Reverse Order**. Select any element in the object 1 profile to make this object go clockwise. Now, all three objects are going clockwise.
   b. ***Make object 3 go first, then 2, then 1.*** First Group all three objects. Now, **Edit >> Order Path >> Reverse Order**. Click on "Order Only" and click on "Group Reverse".

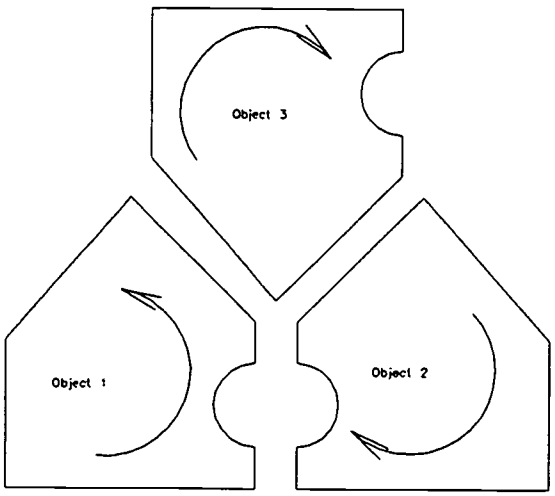

Figure 6

7. Move object 3 back to the peak of object 2 as shown in figure 7. Then,
   a. Use **Edit >> Order Path >> Prof_Start** and select the appropriate element such that the tool path for object 2 begins at the point shown in figure 7.
   b. Create the "figure 8" toolpath as shown in figure 7. First, group the elements in object 3 in the required order. Second, **Insert >> After >> element >>** select the appropriate element in object 2. Third, **Edit >> Order Path >> Sequence Move >> Go.**

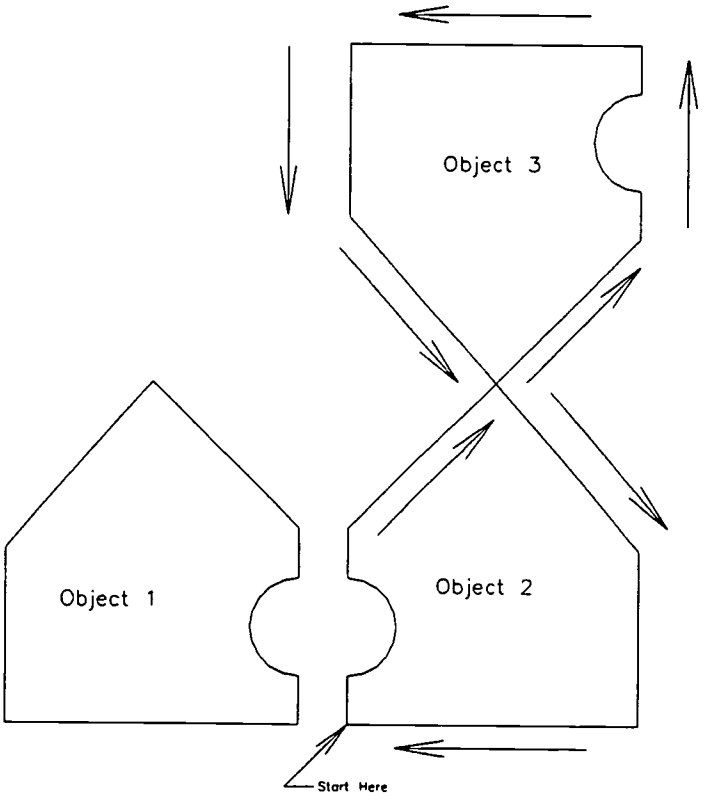

Figure 7

SmartCAM's Step_Sort command

(Printed from: Advanced 3-D Machining Reference Manual page 3-49)

Use Step Sort to resequence a group of elements or the entire database according to the steps or tools assigned to them. You can sort elements in the following ways:

1. Sort elements associated with a single step;
2. Sort elements associated with a single tool;
3. Sort all elements in the database according to the step order in the job operations setup;
4. Sort all elements in the database according to the tool order in the job operations setup;
5. Sort an active group according to the step order in the job operations setup; and,
6. Sort an active group according to the tool order in the job operations setup.

When you copy geometry to different locations, the order of events stays the same for each location. Use Step Sort to change the order of events so that one tool finishes all of its operations before SmartCAM indexes the next tool.

The following lists the different options from the Sort Step dialog box with an explanation as to how it works.

Sort Domain:

Active Group: Select Active Group to sequence only the active group.

Entire File: Select Entire File to resequence all elements in the database. Elements associated with layers will be sequenced before elements associated with steps.

Sort Single Step #:

Type the step number to sort, and press ENTER. All the occurrences of the step are sequenced after the first occurrence of the step in the database.

Sort Single Tool #:

Type the tool number to sort, and press ENTER. All the occurrences of the tool are sequenced after the first occurrence of the tool in the database.

All Steps:

Resequences all elements associated with steps, using the order of the steps in the job operations setup. All elements associated with a layer are sequenced at the start of the file.

All Tools:

Resequences all toolpath elements, using the order of the tools in the job operations setup. All elements associated with a layer are sequenced at the start of the file. Select the type of sequencing.

LSR-J8-LE
Edit Tool Paths
Attachment 4: **MASTER** Laboratory Exercise

Successful completion of this technical module will be based on the students' successful completion of the following components:

a. Demonstrate how to reverse the machining direction a profile;
b. Demonstrate how to change where a machining profile begins;
c. Demonstrate how to arrange the sequencing of machining events based on how the steps (tools) in the job file were created; and,
d. Demonstrate how to maneuver the sequencing of machining events by grouping, setting a new location in the data base, and initiating the Sequence Move command.

LASER MACHINING SERIES

MASTER Technical Module No. LSR-J9

Subject: Laser Machining **Time:** 6 Hrs.

Duty: Perform Computer-Aided Manufacturing (CAM)
Task: Use Construction Layers in SmartCAM

Note: SmartCAM® is being used as a typical CAM system.

Objective(s):

Upon completion of this unit the student will be able to demonstrate how to establish and use construction layers to graphically create mathematical solutions for parts involving trigonometric measurements.

Instructional Materials:

SmartCAM® milling and/or fabrication software Version 8 or higher
486 DX2 or Pentium computer (IBM compatible) with SVGA monitor
MASTER Handout No. 1 (LSR-J9-HO1)
MASTER Handout No. 2 (LSR-J9-HO2) (Layers in SmartCAM)
MASTER Laboratory Exercise (LSR-J9-LE)
MASTER Laboratory Worksheet (LSR-J9-LW)

References:

Getting Started with SmartCAM® Milling, CAMAX Manufacturing Technologies, Latest Edition
SmartCAM® Milling Training Manual, CAMAX Manufacturing Technologies, Latest Edition
CNC Process Modeling Using SmartCAM, Lin, Dr. S. C., et. al., Scholars International Publishing Corp., Latest Edition

Student Preparation:

Students should have previously completed the following Technical Modules:
LSR-J8 "Edit Tool Paths"

Introduction:

CAM programming involves an understanding of machining, computers, materials, and part processing. SmartCAM® utilizes a concept called "**The CNC Process**

Model" which incorporates the creation of part geometry as tool paths and allows for change and interaction with the model. The path of the cutting tool can be viewed at any time in any number of viewing angles. Once the geometry and order of operation are complete, CNC code is generated to a file and downloaded to the machine. This code is in compliance with the specific machine on which the part will be manufactured. SmartCAM has the capability of generating code for any computer controlled machine provided that the necessary code generator files have been either created by the user or purchased from CAMAX. In this module, the student learn how to avoid performing trigonometric calculations by using layers to graphically solve problems. The student will learn how to establish a layer in SmartCAM, create the appropriate geometry, then use OFFSET and TRIM_EXTEND to produce snap points for tool path geometry.

Presentation Outline:

I. Use Construction Layers in SmartCAM
   - A. Discuss the use of layers in profile construction
     Note: Emphasis is placed on creating lines at an angle with known length
   - B. Establish snap points using layers
   - C. Trim profiles to "snapable" configurations

Practical Application:

Students will observe and participate in the discussion of the topics listed above. Following the demonstrations, students will complete LSR-J9-LW.

Evaluation and/or Verification:

Successful completion of this technical module will be based on the students' successful completion of the following components:

a. Demonstrate how to add a layer using **Insert**;
b. Demonstrate how to create lines at an angle with a known length;
c. Demonstrate how to use **Wall_Offset** to create profile construction; and,
d. Demonstrate how to use **Trim_Extend** as required to finalize geometry.

Summary:

Review the main lesson points using the suggested text(s) listed in the reference section of this module. Hold class discussion and answer student questions.

Next Lesson Assignment:

MASTER Technical Module (LSR-J10) pertaining to performing user commands and machine events.

LSR-J9-HO1
Use Construction Layers in SmartCAM
Attachment 1: **MASTER** Handout No. 1

Objective(s):

Upon completion of this unit the student will be able to demonstrate how to establish and use construction layers to graphically create mathematical solutions for parts involving trigonometric measurements.

Module Outline:

I. Use Construction Layers in SmartCAM
   A. Discuss the use of layers in profile construction
      Note: Emphasis is placed on creating lines at an angle with known length
   B. Establish snap points using layers
   C. Trim profiles to "snapable" configurations

Layers in SmartCAM

(Printed in part from: Advanced 3-D Machining Reference Manual)

The **On Layer** command appears in the **Insert** toolbox. **On Layer** indicates the layer with which the new geometry will be associated. SmartCAM will not generate code for geometry that is associated with a layer. Use On Layer to add graphic representation of material stock, fixtures, and other non-tool path geometry. In the case of construction geometry, you can build part geometry on a layer, and assign steps to it later. To assign step properties to layer geometry, place the geometry in the active group and use Property Change—Toolpath.

To create a new layer. Insert → On Layer → Click on "Add Layer".

Displays a dialog box enabling you to add a layer.

To create the new layer 5:

1. Enter the new Layer number, 5, and select a display Color for the layer. Select Line Style to change the default for Line Style.
2. Accept.

Any geometry now created will be assigned to layer 5.

LSR-J9-LE
Use Construction Layers in SmartCAM
Attachment 3: **MASTER** Laboratory Exercise

Successful completion of this technical module will be based on the students' successful completion of the following components:

a. Demonstrate how to add a layer using **Insert**;
b. Demonstrate how to create lines at an angle with a known length;
c. Demonstrate how to use **Wall_Offset** to create profile construction; and,
d. Demonstrate how to use **Trim_Extend** as required to finalize geometry.

LSR-J9-LW
Use Construction Layers in SmartCAM
Attachment 4: **MASTER** Laboratory Worksheet

Use SmartCAM to create the necessary tool paths to obtain CNC code required for manufacturing the part shown below. The material is 1018 steel.

1. You will need four steps using four tools:
   a. One .375 diameter endmill for roughing: 2 flute, 80 SFPM, .002 IPT;
   b. One .250 diameter endmill for finishing: 4 flute, 140 SFPM, .001 IPT;
   c. One .125 diameter drill: 2 flute, 118° included angle, 70 SFPM, .005 IPR; and,
   d. One .250 diameter counterbore: 2 flute, 70 SFPM, .004 IPR.

   All tools are HSS. All endmills are center cutting. Use 1 inch for each tool's preset length. Use your judgment for all other data.

2. Cut the part from 2.7 x 2.7 x 1.0 stock. Center the part in the stock.

3. Step one starts at the home position: X -1.0, Y 2.5, Z .5
   X0, Y0 is the lower left corner of the stock, Z0 is the top of the stock.

4. Perform roughing in two depths of passes taking .250 depth per pass. Leave .020 for a finish allowance.

5. Provide a lead-in and lead-out for all finish passes. No plunging into material is allowed.

Hand in: This paper and graphic printout of part in isometric. Also, graphics file, job file, and code on a diskette.

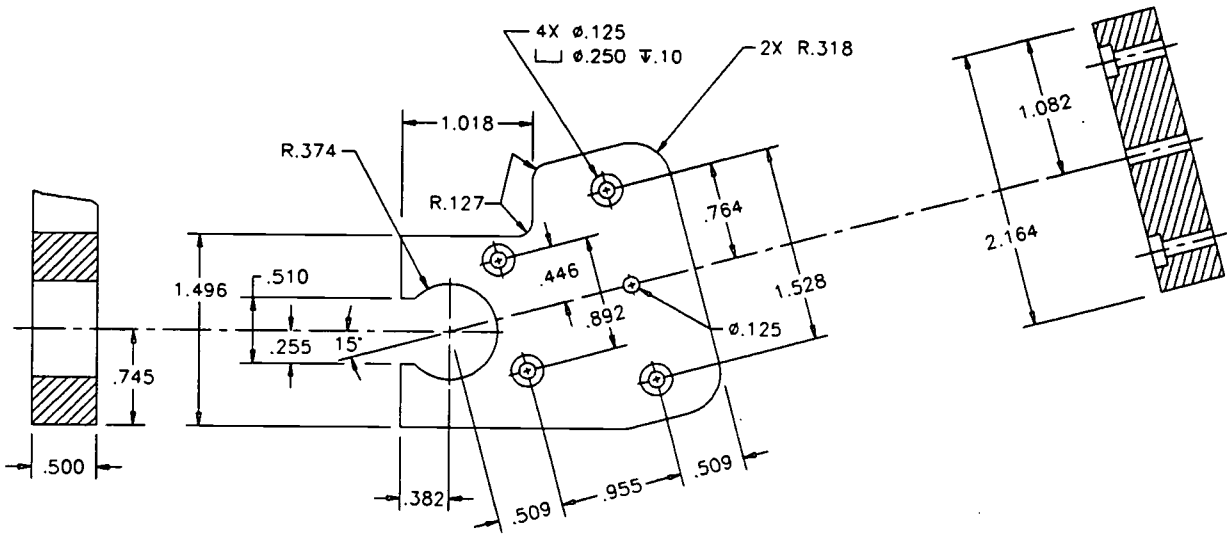
4X ø.125
⌴ ø.250 ↧.10
2X R.318
1.018
R.374
R.127
1.082
.764
2.164
1.496
.510
.446
.892
1.528
.255
15°
ø.125
.745
.500
.382
.509
.955
.509

LASER MACHINING SERIES

MASTER Technical Module No. LSR-J10

Subject: Laser Machining **Time:** 6 Hrs.

Duty: **Perform Computer-Aided Manufacturing (CAM)**
Task: Perform User Commands and Machine Events

Note: SmartCAM® is being used as a typical CAM system.

Objective(s):

Upon completion of this unit the student will be able to:

a. Demonstrate how to utilize some of SmartCAM's built-in macros to facilitate the creation of multiple hole patterns; and,
b. Demonstrate how to change the feed rate of a tool.

Instructional Materials:

SmartCAM® milling and/or fabrication software Version 8 or higher
486 DX2 or Pentium computer (IBM compatible) with SVGA monitor
MASTER Handout No. 1 (LSR-J10-HO1)
MASTER Handout No. 2 (LSR-J10-HO2) (Using GRID for Holes in a Grid Pattern)
MASTER Handout No. 3 (LSR-J10-HO3) (Using LAA for Holes Equally Spaced Along a Line)
MASTER Handout No. 4 (LSR-J10-HO4) (Using Feed Change to Temporarily Change the Feed Rate of a Tool)
MASTER Laboratory Exercise (LSR-J10-LE)
MASTER Laboratory Worksheet (LSR-J10-LW)

References:

Getting Started with SmartCAM® Milling, CAMAX Manufacturing Technologies, Latest Edition
SmartCAM® Milling Training Manual, CAMAX Manufacturing Technologies, Latest Edition
CNC Process Modeling Using SmartCAM, Lin, Dr. S. C., et. al., Scholars International Publishing Corp., Latest Edition

Student Preparation:

Students should have previously completed the following Technical Modules:

LSR-J9 "Use Construction Layers in SmartCAM"

Introduction:

CAM programming involves an understanding of machining, computers, materials, and part processing. SmartCAM® utilizes a concept called "**The CNC Process Model**" which incorporates the creation of part geometry as tool paths and allows for change and interaction with the model. The path of the cutting tool can be viewed at any time in any number of viewing angles. Once the geometry and order of operation are complete, CNC code is generated to a file and downloaded to the machine. This code is in compliance with the specific machine on which the part will be manufactured. SmartCAM has the capability of generating code for any computer controlled machine provided that the necessary code generator files have been either created by the user or purchased from CAMAX. In this module, the student will learn how to augment the creation of multiple hole patterns by using the SmartCAM macros for holes in a line at an angle (LAA) and holes in a grid pattern (GRID). Also, the student will learn how to create a feed rate change (FEED_CHG) so that the tool cutting rate can be slowed or increased on a temporary basis to meet special machining needs.

Presentation Outline:

I. Perform User Commands and Machine Events
   - A. Create multiple hole patterns using line at angle (LAA)
   - B. Create multiple hole patterns using GRID
   - C. Change the tool feed rate (FEED_CHG)

Practical Application:

Students will observe and participate in the discussion of the topics listed above. Following the demonstrations, students will complete LSR-J10-LW.

Evaluation and/or Verification:

Successful completion of this technical module will be based on the students' successful completion of the following components:

1. Demonstrate how to create patterns of holes using the LAA and GRID commands; and,
2. Demonstrate how to temporarily change the feed rate of a tool using FEED_CHG.

Summary:

Review the main lesson points using the suggested text(s) listed in the reference section of this module. Hold class discussion and answer student questions.

Next Lesson Assignment:

MASTER Technical Module (LSR-J11) pertaining to the creation of families of parts.

LSR-J10-HO1
Perform User Commands and Machine Events
Attachment 1: **MASTER** Handout No. 1

Objective(s):

Upon completion of this unit the student will be able to:

a. Demonstrate how to utilize some of SmartCAM's built-in macros to facilitate the creation of multiple hole patterns; and,
b. Demonstrate how to change the feed rate of a tool.

Module Outline

I. Perform User Commands and Machine Events
   A. Create multiple hole patterns using line at angle (LAA)
   B. Create multiple hole patterns using GRID
   C. Change the tool feed rate (FEED_CHG)

ERIC

Using GRID for Holes in a Grid Pattern

(Printed in part from SmartCAM Production Milling Reference Manual)

Use Grid to create a special user command for a grid-hole-pattern machine cycle. The machine cycle creates a series of holes in a defined row-and-column grid arrangement. The hole element that precedes the user command determines the properties of the grid holes. To produce accurate code, your machine must have grid machine cycle capabilities, and an @GRID section must exist in the template file for your machine. If the CNC machine does not have a special G-Code for handling a grid, use **Explode** to change the Grid user command into separate hole elements. SmartCAM inserts this new geometry in the database at the same location as the Grid user command and in the sequence it was created. Now, each hole will have a separate line of code, typically defined by G81 or equivalent.

Accessed from: Create → Machine Events → Grid. In the dialog box:

Field	How it works.
GRID Start Point	Entering the starting point to begin the hole pattern.
Level	Enter the position on the active work plane's Z axis to place the grid of holes. Available only when a hole-making tool is active or when you are inserting geometry associated with a layer.
Row Angle	Enter the absolute angle at which the pattern will be oriented.
Number of Holes in a Row	Enter the number of holes to place in each row.
Hole Spacing	Enter the incremental distance between the holes in each row.
Number of Rows	Specify how many rows to place within the model boundaries.
Row Spacing	Enter the number of rows to place in the grid.

Using LAA for Holes Equally Spaced along a Line

(Printed in part from SmartCAM Production Milling Reference Manual)

Use LAA to create a special user command for a line-at-angle (LAA) machine cycle. The machine cycle creates a series of holes equally spaced along a line. The hole element that precedes the user command determines the properties for the LAA holes. To produce accurate code, your machine must have LAA machine cycle capabilities and an @LAA section must exist in the template file for your machine.

If the CNC machine does not have a special G-Code for handling holes in a line, use **Explode** to change the LAA user command into separate hole elements. SmartCAM inserts this new geometry in the database at the same location as the LAA user command and in the sequence it was created. Now, each hole will have a separate line of code, typically defined by G81 or equivalent.

Accessed from: Create → Machine Events → LAA In the dialog box:

Field	How it works.
LAA Start Point	Enter the starting point to begin the hole pattern.
Level	Enter the position on the active work plane's Z axis to place the Line At Angle. Available only when a hole-making tool is active or when you are inserting geometry associated with a layer.
Angle	Enter the absolute angle of the hole pattern.
Number of Holes	Enter the number of holes on the line.
Hole Spacing	Enter the incremental distance between the holes.

Using Feed Change to Temporarily Change the Feed Rate of a Tool

(Printed in part from SmartCAM Production Milling Reference Manual)

Use Feed Change to create a feed-change user command in the database sequence you specify with the Insert toolbox. SmartCAM displays User Cmd in the list view and a leader pointing to the user command in the graphic view.

Enter a feed change at any appropriate database location. SmartCAM assigns the value you enter to the #FEED template word. You can modify the feed change user command (and other user commands that appear in the graphic view or list view) by using Modify.

Field	How it works.
Feed Change Point	Enter the location for the feed-change point in the model.
Level	Enter the position on the active work plane's Z axis to place the feed-change user command. Available only when a step is active.
Feedrate	Enter the feed rate to send to the machine.

Successful completion of this technical module will be based on the students' successful completion of the following components:

1. Demonstrate how to create patterns of holes using the LAA and GRID commands; and,
2. Demonstrate how to temporarily change the feed rate of a tool using FEED_CHG.

LSR-J10-LW
Perform User Commands and Machine Events
Attachment 6: **MASTER** Laboratory Worksheet

Use SmartCAM to create the necessary tool paths to obtain CNC code required for drilling the .250 diameter hole patterns shown below. The material is 1018 steel.

1. You will need one step using one tool:
   a. One .250 diameter drill: 2 flute, 118° included angle, 70 SFPM, .005 IPR.

      The tool is HSS. Use 1 inch for the tool's preset length. Use your judgment for all other data.

2. The 6 by 5 rectangle is the stock and requires no additional machining.

3. Step one starts at the home position: X -1.0, Y 2.5, Z .5
   X0, Y0 is the lower left corner of the stock, Z0 is the top of the stock.

Hand in: This paper and graphic printout of part in isometric. Also, graphics file, job file, and code on a diskette.

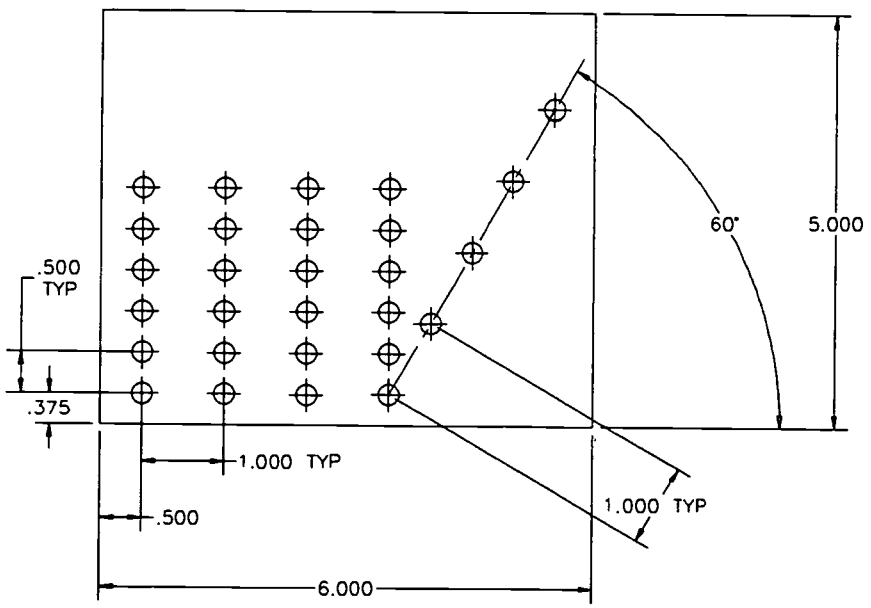

LASER MACHINING SERIES

MASTER Technical Module No. LSR-J11

Subject: Laser Machining **Time: 6 Hrs.**

Duty: Perform Computer-Aided Manufacturing (CAM)
Task: Create Families of Parts

Note: SmartCAM® is being used as a typical CAM system.

Objective(s):

Upon completion of this unit the student will be able to:

a. Demonstrate how to create part families utilizing the SmartCAM Macro command; and,
b. Demonstrate how to use and change variables in the macro program.

Instructional Materials:

SmartCAM® milling and/or fabrication software Version 8 or higher
486 DX2 or Pentium computer (IBM compatible) with SVGA monitor
MASTER Handout (LSR-J11-HO)
MASTER Laboratory Exercise (LSR-J11-LE)
MASTER Laboratory Worksheet (LSR-J11-LW)

References:

Getting Started with SmartCAM® Milling, CAMAX Manufacturing Technologies, Latest Edition
SmartCAM® Milling Training Manual, CAMAX Manufacturing Technologies, Latest Edition
SmartCAM® Customization Manual for Microsoft® Windows™, DOC 1001161, Latest Edition
CNC Process Modeling Using SmartCAM, Lin, Dr. S. C., et. al., Scholars International Publishing Corp., Latest Edition

Student Preparation:

Students should have previously completed the following Technical Modules:
LSR-J10 "Perform User Commands and Machine Events"

Introduction:

CAM programming involves an understanding of machining, computers, materials, and part processing. SmartCAM® utilizes a concept called "**The CNC Process Model**" which incorporates the creation of part geometry as tool paths and allows for change and interaction with the model. The path of the cutting tool can be viewed at any time in any number of viewing angles. Once the geometry and order of operation are complete, CNC code is generated to a file and downloaded to the machine. This code is in compliance with the specific machine on which the part will be manufactured. SmartCAM has the capability of generating code for any computer controlled machine provided that the necessary code generator files have been either created by the user or purchased from CAMAX. In this module, the student will learn how to record a series of keystrokes as a macro and combine the usage of variables such that one macro program (.MCL file) can be used to generate part geometry and CNC code for families of parts.

Presentation Outline:

I. Create Families of Parts
   - A. Discuss the importance of macros
   - B. Create variables to represent part geometry
   - C. Record a macro
   - D. Edit and use a macro

Practical Application:

Students will observe and participate in the discussion of the topics listed above. Following the demonstrations, students will complete LSR-J11-LW.

Evaluation and/or Verification:

Successful completion of this technical module will be based on the students' successful completion of the following components:

1. Demonstrate how to record a macro;
2. Demonstrate how to use variables within a macro; and,
3. Demonstrate how to edit and use a macro.

Summary:

Review the main lesson points using the suggested text(s) listed in the reference section of this module. Hold class discussion and answer student questions.

Next Lesson Assignment:

MASTER Technical Module (LSR-J12) pertaining to CAD/CAM integration.

LSR-J11-HO
Create Families of Parts
Attachment 1: **MASTER** Handout

Objective(s):

Upon completion of this unit the student will be able to:

a. Demonstrate how to create part families utilizing the SmartCAM Macro command; and,
b. Demonstrate how to use and change variables in the macro program.

Module Outline:

I. Create Families of Parts
   A. Discuss the importance of macros
   B. Create variables to represent part geometry
   C. Record a macro
   D. Edit and use a macro

ERIC

Successful completion of this technical module will be based on the students' successful completion of the following components:

1. Demonstrate how to record a macro;
2. Demonstrate how to use variables within a macro; and,
3. Demonstrate how to edit and use a macro.

LSR-J11-LW
Create Families of Parts
Attachment 3: **MASTER** Laboratory Worksheet

Use SmartCAM to create two macros to serve for the family of parts as shown on the second page.

Macro 1 → Create the .MCL file to create the parts as shown.

Macro 2 → Create the .MCL file to create the parts as shown, except place the pocket designated by diameter "C" in the exact middle of the rectangle.

Each macro will begin with the job plan read in. That is, File → Load Job File (enter job plan name). Therefore, the first command will be "INSERT".

1. Make a job plan with the following tooling:
   a. One .375 endmill for roughing from outside stock;
   b. One .250 diameter endmill for roughing the pocket designated by diameter "C";
   c. One .250 diameter endmill for all finishing;
   d. One .250 diameter drill. Use a drill angle of 118°; and,
   e. Make each tool 1.5 inches long.

2. Set all speeds at 1700 RPM. Rough at 10 in/min, finish at 5 in/min, drill at 3 in/min.

3. Rough the part from stock which is .5 inches larger the rectangle dimensions A, B, and T. Center the part in the stock.

4. Do not include tool change points.

5. X0, Y0 is the lower left corner of the stock, Z0 is the top of the stock.

6. Perform roughing in two sets of passes taking T/2 per pass.

7. Leave .020 on all sides of the part for the finish pass. Do not allow for a finish on the bottom of the pocket.

8. Do not provide a lead-in and lead-out for the finish pass.

9. End the Macro with the part in ISO and a View Full.

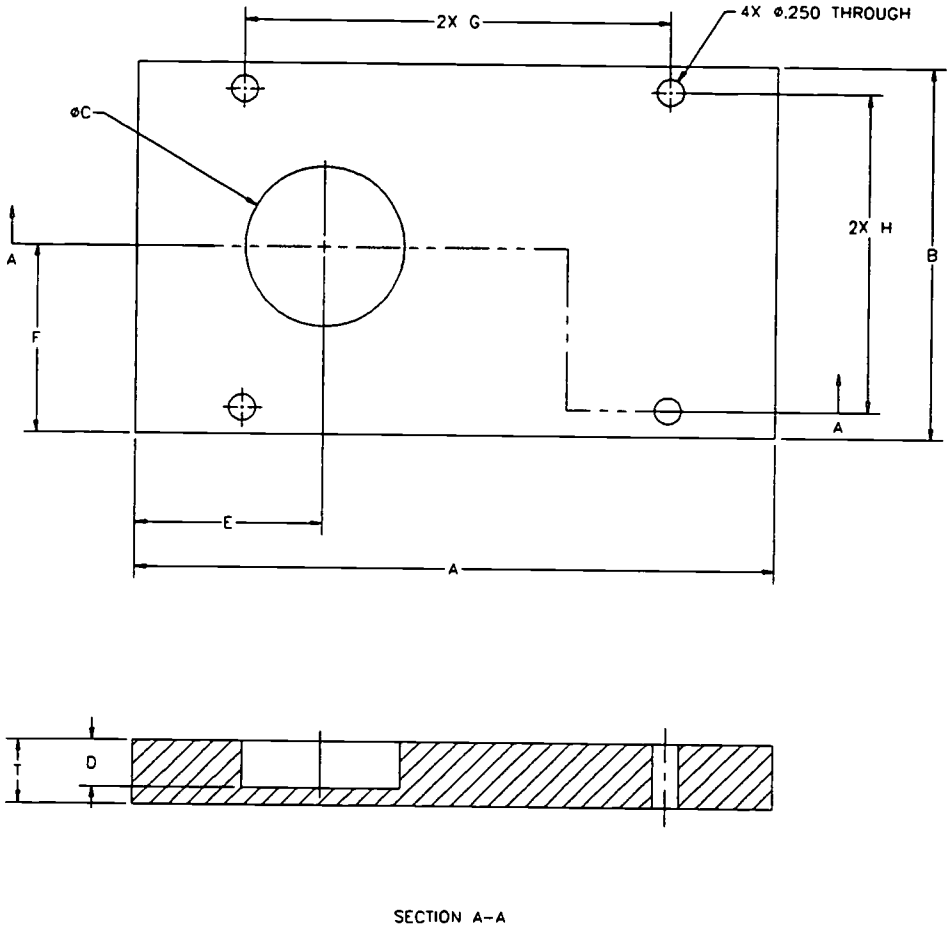

SECTION A–A

Note: Dimension G and H are centered to Dimensions A and B respectively.

Family of Parts Table

	T	A	B	C	D	E	F	G	H
Part 1	.60	6.00	3.5	1.5	.44	1.77	1.77	4.0	3.0
Part 2	.8	8.00	5.5	2.0	.60	2.36	2.95	5.0	4.5

LASER MACHINING SERIES

MASTER Technical Module No. LSR-J12

Subject: Laser Machining **Time:** 6 Hrs.

Duty: Perform Computer-Aided Manufacturing (CAM)
Task: Perform CAD/CAM Integration

Note: SmartCAM® is being used as a typical CAM system.

Objective(s):

Upon completion of this unit the student will be able to:
a. Demonstrate how to create .DXF files in AutoCAD; and,
b. Demonstrate how to perform .DXF file translation into SmartCAM.

Instructional Materials:

SmartCAM® milling and/or fabrication software Version 8 or higher
486 DX2 or Pentium computer (IBM compatible) with SVGA monitor
MASTER Handout (LSR-J12-HO1)
MASTER Handout (LSR-J12-HO2) (DXF Importing in SmartCAM v.9)
MASTER Laboratory Exercise (LSR-J12-LE)
MASTER Laboratory Worksheet (LSR-J12-LW)

References:

Getting Started with SmartCAM® Milling, CAMAX Manufacturing Technologies, Latest Edition
SmartCAM® Milling Training Manual, CAMAX Manufacturing Technologies, Latest Edition
CNC Process Modeling Using SmartCAM, Lin, Dr. S. C., et. al., Scholars International Publishing Corp., Latest Edition

Student Preparation:

Students should have previously completed the following Technical Modules:
LSR-J11 "Create Families of Parts"

Introduction:

CAM programming involves an understanding of machining, computers, materials, and part processing. SmartCAM® utilizes a concept called "**The CNC Process Model**"

which incorporates the creation of part geometry as tool paths and allows for change and interaction with the model. The path of the cutting tool can be viewed at any time in any number of viewing angles. Once the geometry and order of operation are complete, CNC code is generated to a file and downloaded to the machine. This code is in compliance with the specific machine on which the part will be manufactured. SmartCAM has the capability of generating code for any computer controlled machine provided that the necessary code generator files have been either created by the user or purchased from CAMAX. In this module, the student will learn how to take an AutoCAD drawing and output a .DXF file (Drawing eXchange File). Then, using SmartCAM®'s DXF cam connection command, import the file into the SmartCAM system, edit as needed and create CNC code.

Presentation Outline:

I. Perform CAD/CAM Integration
   - A. Create .DXF files in AutoCAD®
   - B. Discuss the importance of layers in AutoCAD®
   - C. Perform .DXF file translation in SmartCAM

Practical Application:

Students will observe and participate in the discussion of the topics listed above. Following the demonstrations, students will complete LSR-J12-LW.

Evaluation and/or Verification:

Successful completion of this technical module will be based on the students' successful completion of the following components:

1. Demonstrate how to Create .DXF files in AutoCAD®;
2. Demonstrate how to set up or modify AutoCAD® layers for successful file translation; and,
3. Perform .DXF file translation in SmartCAM®.

Summary:

Review the main lesson points using the suggested text(s) listed in the reference section of this module. Hold class discussion and answer student questions.

Next Lesson Assignment:

MASTER Technical Module (LSR-J13) pertaining to code generation.

LSR-J12-HO1
Perform CAD/CAM Integration
Attachment 1: **MASTER** Handout No. 1

Objective(s):

Upon completion of this unit the student will be able to:

a. Demonstrate how to create .DXF files in AutoCAD; and,
b. Demonstrate how to perform .DXF file translation into SmartCAM.

Module Outline:

I. Perform CAD/CAM Integration
   A. Create .DXF files in AutoCAD®
   B. Discuss the importance of layers in AutoCAD®
   C. Perform .DXF file translation in SmartCAM

ERIC

DXF Importing in SmartCAM .v9

From main SmartCAM icon cluster, enter **DXF CAM Connection.**

Click on **Settings** → **Conversion** → **Misc_Options**

For layers to be translated: Enter the desired layer numbers to be translated or leave as * (all layer will be transferred). You can separate layers numbers with commas, example: 1,2,4 would translated into AutoCAD layers 1 2 and 4.

Quit back to main DXF menu.

Select **From_CAD**

For AutoCAD DXF file name: Enter DXF file (you do not need to include the extension). Please note you can hit F3 to select the file name.

For Destination Shape file: Enter the name of the SmartCAM file you wish to create (example GMLAB6). Please note that SmartCAM will assign a .SH3 extension to the file name. ***DO NOT*** try to change this to a .PM4!!

For Job Plan file name: Type C:\SM9\SHARED\DEFAULT <enter>, the translation is performed. (Please note you can hit F3 to select the file name. Select the file then OK the dialog box, the translation is performed.)

Leave the cam connection menu.

Start a SmartCAM session by entering Advanced 3D machining in the ususal manner.

File → **Open** → in the dialog box: Change **File type** to (3-D .SH3) → enter the file name you used in step 7. *Note: You may use File Select.*

You will get an error message claiming the job file is not on file, do you want to continue processing? Just click on "Yes" and the file is drawn on the screen. You will notice that all geometry is on a layer!!

File → **Planner**. Create your job plan in the usual manner.

Do a **Save As**. This will save your files as .JOF and .PM4 as we are used to!!

Property change as required to produce the part.

Successful completion of this technical module will be based on the students' successful completion of the following components:

1. Demonstrate how to Create .DXF files in AutoCAD®;
2. Demonstrate how to set up or modify AutoCAD® layers for successful file translation; and,
3. Perform .DXF file translation in SmartCAM®.

LSR-J12-LW
Perform CAD/CAM Integration
Attachment 4: **MASTER** Laboratory Worksheet

Using the figure provided to you by the instructor, create an AutoCAD drawing. Save the file in DXF format. Translate the DXF file into a SmartCAM SH3 file as outlined in LSR-J12-HO2. This figure may be created as a mill part in SmartCAM's Advanced 3D Machining Module or as a laser part using SmartCAM's Advanced Fabrication Module.

Once in SmartCAM's graphic screen, create an appropriate job file, edit the geometry as needed and create CNC code.

LASER MACHINING SERIES

MASTER Technical Module No. LSR-J13

Subject: Laser Machining **Time:** 6 Hrs.

Duty: Perform Computer-Aided Manufacturing (CAM)
Task: Perform Code Generation

Note: SmartCAM® is being used as a typical CAM system.

Objective(s):

Upon completion of this unit the student will be able to:

a. Discuss how a code generator works;
b. Discuss the function of the Machine file (.SMF);
c. Discuss the function of the Template file (.TMP); and,
d. Modify code generators.

Instructional Materials:

SmartCAM® milling and/or fabrication software Version 8 or higher
486 DX2 or Pentium computer (IBM compatible) with SVGA monitor
MASTER Handout No. 1 (LSR-J13-HO1)
MASTER Handout No. 2 (LSR-J13-HO2) (How SmartCAM Uses Four Files to Generate CNC Code)
MASTER Laboratory Exercise (LSR-J13-LE)

References:

Getting Started with SmartCAM® Milling, CAMAX Manufacturing Technologies, Latest Edition
SmartCAM® Milling Training Manual, CAMAX Manufacturing Technologies, Latest Edition
CNC Process Modeling using SmartCAM, Lin, Dr. S. C., et. al., Scholars International Publishing Corp., Latest Edition

Student Preparation:

Students should have previously completed the following Technical Modules:
LSR-J12 "Perform CAD/CAM Integration"

Introduction:

CAM programming involves an understanding of machining, computers, materials, and part processing. SmartCAM® utilizes a concept called "**The CNC Process Model**" which incorporates the creation of part geometry as tool paths and allows for change and interaction with the model. The path of the cutting tool can be viewed at any time in any number of viewing angles. Once the geometry and order of operation are complete, CNC code is generated to a file and downloaded to the machine. This code is in compliance with the specific machine on which the part will be manufactured. SmartCAM has the capability of generating code for any computer controlled machine provided that the necessary code generator files have been either created by the user or purchased from CAMAX. In this module, the student will learn how SmartCAM generates code. SmartCAM uses four files to generate code. The Job file (.JOF) and the graphics file (.PM4) establish the tooling and toolpath geometry. The machine file (.SMF) defines the specifics of the CNC machine which will be used. The template file (.TMP) establishes the CNC code structure and format for the machine.

Presentation Outline:

I. Perform CAD/CAM Integration
   - A. Study how a code generator works
   - B. Study the Machine file (.SMF)
   - C. Study the Template file (.TMP)
   - D. Study how to modify code generators

Practical Application:

Students will observe and participate in the discussion of the topics listed above. Following the demonstrations, students will complete exercises assigned by the instructor.

Evaluation and/or Verification:

Successful completion of this technical module will be based on the students' successful completion of the following components:

a. Discuss the four files SmartCAM uses to generate code;
b. Describe a machine file;
c. Describe a template file; and,
d. Demonstrate code file modifications for machine and template files.

Summary:

Review the main lesson points using the suggested text(s) listed in the reference section of this module. Hold class discussion and answer student questions.

Next Lesson Assignment:

This completes the Laser Machining Technical Modules.

LSR-J13-HO1
Perform Code Generation
Attachment 1: **MASTER** Handout No. 1

Objective(s):

Upon completion of this unit the student will be able to:

a. Discuss how a code generator works;
b. Discuss the function of the Machine file (.SMF);
c. Discuss the function of the Template file (.TMP); and,
d. Modify code generators.

Module Outline:

I. Perform CAD/CAM Integration
   A. Study how a code generator works
   B. Study the Machine file (.SMF)
   C. Study the Template file (.TMP)
   D. Study how to modify code generators

ERIC

How SmartCAM Uses Four Files to Generate CNC Code

Job File: .JOF

Sets Machine
Defines Tools

Machine File: .SMF

Sets Machine Parameters

Graphic Model: .PM4

Sequential Manufacturing
Data Base: All Machine
Motion

Template File: .TMP

Sets the syntax for CNC
Code

Code

Successful completion of this technical module will be based on the students' successful completion of the following components:

a. Discuss the four files SmartCAM uses to generate code;
b. Describe a machine file;
c. Describe a template file; and,
d. Demonstrate code file modifications for machine and template files.

MACHINE TOOL ADVANCED SKILLS TECHNOLOGY EDUCATIONAL RESOURCES

MASTER

a consortium of educators and industry

EDUCATIONAL RESOURCES FOR THE MACHINE TOOL INDUSTRY

Laser Machining Series

STUDENT LABORATORY MANUAL

BEST COPY AVAILABLE

Supported by the National Science Foundation's Advanced Technological Education Program

MACHINE TOOL ADVANCED SKILLS TECHNOLOGY EDUCATIONAL RESOURCES

MASTER

a consortium of educators and industry

EDUCATIONAL RESOURCES FOR THE MACHINE TOOL INDUSTRY

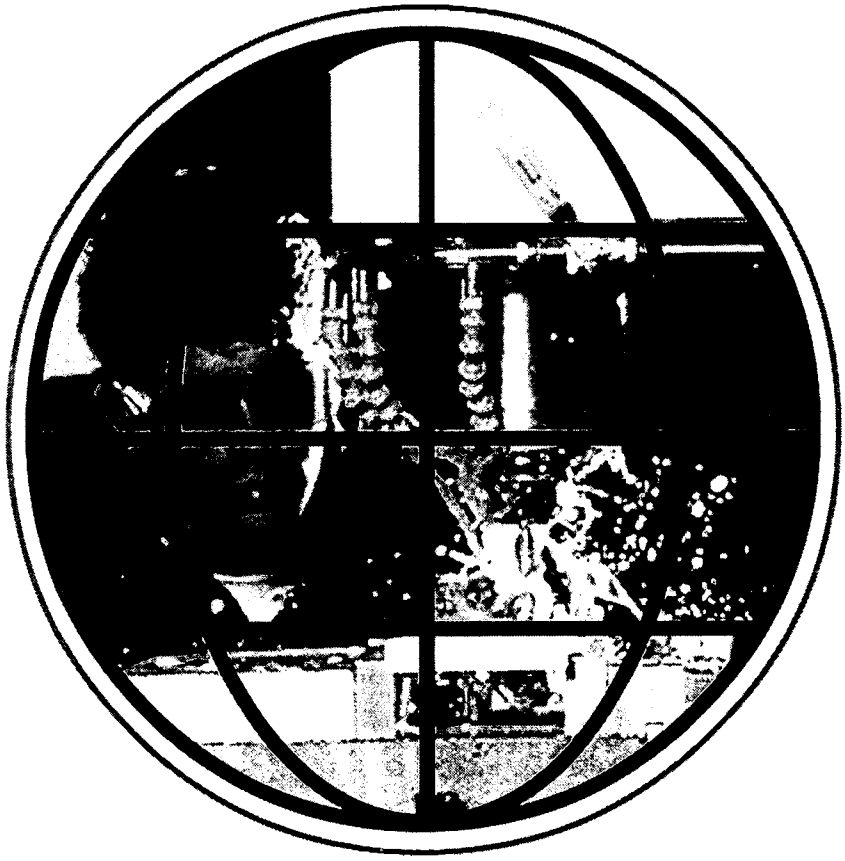

Laser Machining Series

STUDENT LABORATORY MANUAL

Supported by the National Science Foundation's Advanced Technological Education Program

ERIC BEST COPY AVAILABLE

This material is based upon work supported by the
National Science Foundation under Grant No. DUE-9553716

National Science Foundation
Advanced Technological Education Program

"Any opinions, findings, and conclusions or recommendations expressed in this material are those of the author(s) and do not necessarily reflect the views of the Foundation."

ACKNOWLEDGEMENTS

This project was made possible by the cooperation and direct support of the following organizations:

National Science Foundation - Division of Undergraduate Education
MASTER Consortia of Employers and Educators

MASTER has built upon the foundation which was laid by the Machine Tool Advanced Skills Technology (MAST) Program. The MAST Program was supported by the U.S. Department of Education - Office of Vocational and Adult Education. Without this prior support MASTER could not have reached the level of quality and quantity that is contained in these project deliverables.

MASTER DEVELOPMENT CENTERS
Augusta Technical Institute - Central Florida Community College - Itawamba Community College - Moraine Valley Community College - San Diego City College (CACT) - Springfield Technical Community College - Texas State Technical College

INDUSTRIES
AB Lasers - AIRCAP/MTD - ALCOA - American Saw - AMOCO Performance Products - Automatic Switch Company - Bell Helicopter - Bowen Tool - Brunner - Chrysler Corp. - Chrysler Technologies - Conveyor Plus - Darr Caterpillar - Davis Technologies - Delta International - Devon - D. J. Plastics - Eaton Leonard - EBTEC - Electro-Motive - Emergency One - Eureka - Foster Mold - GeoDiamond/Smith International - Greenfield Industries - Hunter Douglas - Industrial Laser - ITT Engineered Valve - Kaiser Aluminum - Krueger International. - Laser Fare - Laser Services - Lockheed Martin - McDonnell Douglas - Mercury Tool - NASSCO - NutraSweet - Rapistan DEMAG - Reed Tool - ROHR, International - Searle - Solar Turbine - Southwest Fabricators - Smith & Wesson - Standard Refrigeration - Super Sagless - Taylor Guitars - Tecumseh - Teledyne Ryan - Thermal Ceramics - Thomas Lighting - FMC, United Defense - United Technologies Hamilton Standard

COLLEGE AFFILIATES
Aiken Technical College - Bevil Center for Advanced Manufacturing Technology - Chicago Manufacturing Technology Extension Center - Great Lakes Manufacturing Technology Center - Indiana Vocational Technical College - Milwaukee Area Technical College - Okaloosa-Walton Community College - Piedmont Technical College - Pueblo Community College - Salt Lake Community College - Spokane Community College - Texas State Technical Colleges at Harlington, Marshall, Sweetwater

FEDERAL LABS
Jet Propulsion Lab - Lawrence Livermore National Laboratory - L.B.J. Space Center (NASA) - Los Alamos Laboratory - Oak Ridge National Laboratory - Sandia National Laboratory - Several National Institute of Standards and Technology Centers (NIST) - Tank Automotive Research and Development Center (TARDEC) - Wright Laboratories

SECONDARY SCHOOLS
Aiken Career Center - Chicopee Comprehensive High School - Community High School (Moraine, IL) - Connally ISD - Consolidated High School - Evans High - Greenwood Vocational School - Hoover Sr. High - Killeen ISD - LaVega ISD - Lincoln Sr. High - Marlin ISD - Midway ISD - Moraine Area Career Center - Morse Sr. High - Point Lamar Sr. High -

Pontotoc Ridge Area Vocational Center - Putnam Vocational High School - San Diego Sr. High - Tupelo-Lee Vocational Center - Waco ISD - Westfield Vocational High School

ASSOCIATIONS

American Vocational Association (AVA) - Center for Occupational Research and Development (CORD) - CIM in Higher Education (CIMHE) - Heart of Texas Tech-Prep - Midwest (Michigan) Manufacturing Technology Center (MMTC) - National Coalition For Advanced Manufacturing (NACFAM) - National Coalition of Advanced Technology Centers (NCATC) - National Skills Standards Pilot Programs - National Tooling and Machining Association (NTMA) - New York Manufacturing Extension Partnership (NYMEP) - Precision Metalforming Association (PMA) - Society of Manufacturing Engineers (SME) - Southeast Manufacturing Technology Center (SMTC)

MASTER PROJECT EVALUATORS

Dr. James Hales, East Tennessee State University and William Ruxton, formerly with the National Tooling and Machine Association (NTMA)

NATIONAL ADVISORY COUNCIL MEMBERS

The National Advisory Council has provided input and guidance into the project since the beginning. Without their contributions, MASTER could not have been nearly as successful as it has been. Much appreciation and thanks go to each of the members of this committee from the project team.
Dr. Hugh Rogers-Dean of Technology-Central Florida Community College
Dr. Don Clark-Professor Emeritus-Texas A&M University
Dr. Don Edwards-Department of Management-Baylor University
Dr. Jon Botsford-Vice President for Technology-Pueblo Community College
Mr. Robert Swanson-Administrator of Human Resources-Bell Helicopter, TEXTRON
Mr. Jack Peck-Vice President of Manufacturing-Mercury Tool & Die
Mr. Don Hancock-Superintendent-Connally ISD

SPECIAL RECOGNITION

Dr. Hugh Rogers recognized the need for this project, developed the baseline concepts and methodology, and pulled together industrial and academic partners from across the nation into a solid consortium. Special thanks and singular congratulations go to Dr. Rogers for his extraordinary efforts in this endeavor.

Dr. Don Pierson served as the Principal Investigator for the first two years of MASTER. His input and guidance of the project during the formative years was of tremendous value to the project team. Special thanks and best wishes go to Dr. Pierson during his retirement and all his worldly travels.

All findings and deliverables resulting from MASTER are primarily based upon information provided by the above companies, schools and labs. We sincerely thank key personnel within these organizations for their commitment and dedication to this project. Including the national survey, more than 2,800 other companies and organizations participated in this project. We commend their efforts in our combined attempt to reach some common ground in precision manufacturing skills standards and curriculum development.

MASTER DEVELOPMENT CENTER, SPRINGFIELD, MA
Center for Business and Technology
Springfield Technical Community College

Dr. Andrew M. Scibelli, President
Springfield Technical Community College

Dr. Thomas E. Holland, Vice President
Center for Business and Technology

One Armory Square
Springfield, MA 01105
College phone: 413/781-7822, fax: 413/781-5805
Center phone: 413/781-1314, fax:413/739-5066
e-mail: tholland@stccadmin.stcc.mass.edu

Manufacturing in New England

According to a 1994 survey from the U.S. Bureau of Labor Statistics, approximately 17% of the employment in New England is manufacturing-related, 32% is service industry, 22% is trade industry, and 29% are other industries. Recent studies show that there are four major areas of emerging growth in technical employment: (1) telecommuncations, (2) biotechnology, (3) environmental technology, and (4) advanced manufacturing technology. Telecommunications, environmental technology and biotechnology are among the top four new growth industries of the region, now constituting a total of more than 205,000 new jobs (NEBHE, 1994). While manufacturing -- long a primary sector of the New England economy -- has declined in the post-cold war era, it still comprises roughly 20% of the employment base of the six-state region. The nature of manufacturing in New England, however, is changing in terms of the technologies of design and production, the materials used, and the products developed. The application of *photonics*, which includes laser machining, is a key emerging technology inherent in all four of the above industries.

Springfield Technical Community College and the Center for Business and Technology

Springfield Technical Community College (STCC) is a public post-secondary institution located within an hour's drive to over 750 metal-machining, optics and photonics manufacturing firms in Massachusetts and Connecticut. The only technical college among the fifteen community colleges in the Commonwealth of Massachusetts, the College is situated between two large urban, disadvantaged communities and serves a highly diverse student body: over 26% of its students are minority, 52% are female, and the average age of all STCC students is twenty-seven. STCC's Advanced Technology Center (ATC) has close to $8 million in technical facilities and equipment in the areas of laser-electro optics, electronics, mechanical technologies (CAD, CNC, CAM), computer-integrated manufacturing (CIM), environmental technology, and the most current computer hardware and software to support manufacturing-related training. STCC also employs a cadre of faculty experts in these technologies who enable the ATC to conduct industry assessments, technical consulting, and industry-specific contract training for the more than 300 small- and medium-sized companies throughout western Massachusetts and Connecticut. The majority of client companies are primary suppliers to the hundreds of defense contractors in New England, including such major firms as United Technologies, Pratt & Whitney, General Electric, Raytheon, and Lockheed-Martin.

Development Team

- **Project Director:** Thomas E. Holland, Ph.D., Vice President of the STCC Center for Business and Technology, served as overall director for the MASTER project.
- **Co-Project Directors**: Gary J. Masciadrelli, MSME, Department Chairman of the STCC Mechanical Engineering Technology Department, and Nicholas M. Massa, MSEE, Program Coordinator for the Laser Electro-Optics Technology program, shared programmatic responsibility for conducting industry assessment, designing curricula, administering the pilot program, and developing skill standards and course/program materials for the Laser Machining component of the MASTER project.

BEST COPY AVAILABLE

Introduction:
STUDENT LABORATORY MANUAL

Prior to the development of this Student Laboratory Manual, **MASTER** project staff visited over 150 companies, conducted interviews with over 500 expert workers, and analyzed data from a national survey involving over 2800 participating companies. These investigations led to the development of a series of Instructor Handbooks, with each being fully industry-driven and specific to one of the technologies shown below:

Advanced CNC and CAM
Automated Equipment Repair
Computer Aided Design & Drafting
Conventional Machining
Industrial Maintenance
Instrumentation
LASER Machining
Manufacturing Technology
Mold Making
Tool And Die
Welding

Each Instructor's Handbook contains a collection of Technical Training Modules which are built around a Competency Profile for the specific occupation. **The Competency Profile which is the basis for this Student Laboratory Manual may be found on the following page (and on each of the tab pages in this book).**

This Student Laboratory Manual has been developed as an learning aid for both the instructor and for the student, and is intended to be used in conjunction with the Instructor's Handbook.

This Student Laboratory Manual is arranged by Duty groupings (Duty A, Duty B, etc.) with learning modules available for each Task Box on the Competency Profile.

This Student Laboratory Manual is supplied with an accompanying Instructor's Handbook for use by the instructor.

Each module in the Instructor's Handbook has a corresponding learning module in the Student Laboratory Manual.

ERIC

Laser Machinist .... apply the principles of electronics, lasers, optics, materials, engineering documentation, CAD/CAM, and systems integration to manufacture products following current industry and company standards.

Duties	Tasks												
A Practice Laser Safety	A-1 Discuss laser safety standards	A-2 Discuss basic laser principles	A-3 Discuss laser hazards	A-4 Discuss control measures									
B Apply Mathematical Concepts	B-1 Perform basic mathematical functions	B-2 Perform algebraic functions	B-3 Study exponents and right triangle geometry	B-4 Study elements of plane and solid geometry	B-5 Perform data evaluation and statistical analysis	B-6 Perform proportioning and interpolation	B-7 Perform basic trigonometric calculations	B-8 Investigate vectors and vector systems	B-9 Investigate the Cartesian Coordiante System				
C Perform Measurement and Inspection	C-1 Study basics of metrology	C-2 Select instruments used for measurement	C-3 Study datums and the three plane concept	C-4 Select gauging tools	C-5 Use CMM for location of features	C-6 Perform measurements for orientation tolerances	C-7 Perform measurment by optical comparison	C-8 Perform measurements for circularity, concentricity, runout, and straightness tolerances	C-9 Investigate advanced metrology topics				
D Troubleshoot Industrial Electronics and Control	D-1 Perform DC voltage, current, and power measurements	D-2 Perform AC voltage, current, and power measurements	D-3 Investigate digital logic systems	D-4 Investigate diode applications	D-5 Investigate transistors and thyristors	D-6 Investigate operational amplifiers	D-7 Investigate power supply circuits						
E Apply Concepts of Modern Optics	E-1 Study reflection and refraction at plane surfaces	E-2 Perform imaging with a single lens	E-3 Perform imaging with multiple lenses	E-4 Study F-stops and apertures	E-5 Use laser beam-expanding collimators	E-6 Study interference	E-7 Study diffraction	E-8 Study polarization	E-9 Investigate radiometry and photometry				
F Perform CNC Machining	F-1 Apply machine specific nomenclature and terminology	F-2 Investigate the Cartesian coordinate system as applied to a CNC mill or laser	F-3 Apply CNC programming language	F-4 Perform start up, tool changing, and ending of programs	F-5 Perform positioning and basic drilling	F-6 Create a sub-program	F-7 Perform contouring	F-8 Apply tool radius compensation	F-9 Perform program preparation	F-10 Apply special laser coding parameters			
G Investigate Industrial Laser Systems	G-1 Review characteristics of light	G-2 Investigate emission and absorption of light	G-3 Discuss optical cavities and laser modes	G-4 Discuss temporal characteristics of lasers	G-5 Investigate spatial characteristics of lasers	G-6 Discuss laser classifications and characteristics							
H Perform Computer-Aided Drafting (CAD)	H-1 Discuss and understand PC basics	H-2 Discuss CAD basics and file management	H-3 Use drawing settings	H-4 Perform basic editing commands	H-5 Create drawings with accuracy	H-6 Organize drawing information	H-7 Control the display of drawings	H-8 Use intermediate drawing commands	H-9 Perform intermediate editing commands	H-10 Create multi view drawings	H-11 Create sectioned drawings	H-12 Investigate basic dimensioning	H-13 Perform advanced dimensioning
	H-14 Use and manipulate blocks	H-15 Use blocks to automate the drawing process											
I Perform Laser Materials Processing	I-1 Review laser safety standards	I-2 Discuss lasers used for materials processing	I-3 Discuss laser optics and beam characteristics	I-4 Investigate absorption of laser energy	I-5 Use lasers for welding and surface treatment	I-6 Use lasers for material removal							
J Perform Computer-Aided Manufacturing (CAM)	J-1 Discuss and understand the basics of a PC based CAM system	J-2 Discuss basic CAM operations	J-3 Set up cutting tools	J-4 Create simple part profiles	J-5 Create and edit complex part profiles	J-6 Perform roughing, drilling, and counterboring	J-7 Advanced editing of part profiles	J-8 Edit tool paths	J-9 Use construction layers in SmartCAM	J-10 Perform user commands and machine events	J-11 Create families of parts	J-12 Perform CAD/CAM integration	J-13 Perform code generation

LSR PM4
040698

BEST COPY AVAILABLE

LSR-A1-HO
Discuss Laser Safety Standards
Attachment 1: **MASTER** Handout

Objective(s):

Upon completion of this unit the student will be able to:

a. Discuss ANSI-Z136.1 "Safe Use of Lasers";
b. Discuss the LIA "Laser Safety Guide"; and,
c. Discuss LIA "Guide for the Selection of Laser Eye Protection".

Module Outline:

I. Discuss Laser Safety Basics
   A. Discuss the type of lasers used at (organization name)
   B. Provide a brief explanation of the ANSI standards for laser safety
   C. Discuss the LIA "Laser Safety Guide"
   D. Discuss LIA "Guide for the Selection of Laser Eye Protection"
   E. Show video "Laser Safety Comes to Light"

ERIC

LSR-A1-LE
Discuss Laser Safety Standards
Attachment 2: **MASTER** Laboratory Exercise

Successful completion of this technical module will be based on the students' successful completion of the following components:

a. Describe the type of lasers used at (organization name);
b. Provide a brief explanation of the ANSI standards for laser safety;
c. Discuss the LIA "Laser Safety Guide"; and,
d. Discuss LIA "Guide for the Selection of Laser Eye Protection".

LSR-A2-HO
Discuss Basic Laser Principles
Attachment 1: **MASTER** Handout

Objective(s):

Upon completion of this unit the student will be able to:

a. Discuss basic laser operation;
b. Describe the basic elements of a laser;
c. Discuss the various types of lasers; and,
d. Discuss the various classes of lasers.

Module Outline:

I. Discuss Light Amplification by Stimulated Emission of Radiation
   A. Discuss how a laser works
      1. Excitation
      2. Population inversion
      3. Spontaneous emission
      4. Stimulated emission
      5. Phase relationship and coherence
      6. Divergence
      7. Optics
   B. Basic elements of a laser
      1. Excitation mechanism (power source)
      2. Active medium (gas, liquid, or solid)
      3. High reflector
      4. Output coupler
      5. Point source vs. extended source
      6. Output laser modes
   C. Types of lasers
      1. Pulsed vs. continuous wave (CW)
      2. Ion lasers
      3. CO_2 lasers
      4. Nd:YAG laser
      5. Excimer lasers
      6. Semiconductor diode lasers
   D. Classification of lasers
      1. Class I
      2. Class II
      3. Class III
      4. Class IIIa
      5. Class IV

Laser Machinist .... apply the principles of electronics, lasers, optics, materials, engineering documentation, CAD/CAM, and systems integration to manufacture products following current industry and company standards.

Duties	Tasks												
A Practice Laser Safety	A-1 Discuss laser safety standards	A-2 Discuss basic laser principles	A-3 Discuss laser hazards	A-4 Discuss control measures									
B Apply Mathematical Concepts	B-1 Perform basic mathematical functions	B-2 Perform algebraic functions	B-3 Study exponents and right triangle geometry	B-4 Study elements of plane and solid geometry	B-5 Perform data evaluation and statistical analysis	B-6 Perform proportioning and interpolation	B-7 Perform basic trigonometric calculations	B-8 Investigate vectors and vector systems	B-9 Investigate the Cartesian Coordiante System				
C Perform Measurement and Inspection	C-1 Study basics of metrology	C-2 Select instruments used for measurement	C-3 Study datums and the three plane concept	C-4 Select gauging tools	C-5 Use CMM for location of features	C-6 Perform measurements for orientation tolerances	C-7 Perform measurment by optical comparison	C-8 Perform measurements for circularity, concentricity, runout, and straightness tolerances	C-9 Investigate advanced metrology topics				
D Troubleshoot Industrial Electronics and Control	D-1 Perform DC voltage, current, and power measurements	D-2 Perform AC voltage, current, and power measurements	D-3 Investigate digital logic systems	D-4 Investigate diode applications	D-5 Investigate transistors and thyristors	D-6 Investigate operational amplifiers	D-7 Investigate power supply circuits						
E Apply Concepts of Modern Optics	E-1 Study reflection and refraction at plane surfaces	E-2 Perform imaging with a single lens	E-3 Perform imaging with multiple lenses	E-4 Study F-stops and apertures	E-5 Use laser beam-expanding collimators	E-6 Study interference	E-7 Study diffraction	E-8 Study polarization	E-9 Investigate radiometry and photometry				
F Perform CNC Machining	F-1 Apply machine specific nomenclature and terminology	F-2 Investigate the Cartesian coordinate system as applied to a CNC mill or laser	F-3 Apply CNC programming language	F-4 Perform start up, tool changing, and ending of programs	F-5 Perform positioning and basic drilling	F-6 Create a sub-program	F-7 Perform contouring	F-8 Apply tool radius compensation	F-9 Perform program preparation	F-10 Apply special laser coding parameters			
G Investigate Industrial Laser Systems	G-1 Review characteristics of light	G-2 Investigate emission and absorption of light	G-3 Discuss optical cavities and laser modes	G-4 Discuss temporal characteristics of lasers	G-5 Investigate spatial characteristics of lasers	G-6 Discuss laser classifications and characteristics							
H Perform Computer-Aided Drafting (CAD)	H-1 Discuss and understand PC basics	H-2 Discuss CAD basics and file management	H-3 Use drawing settings	H-4 Perform basic editing commands	H-5 Create drawings with accuracy	H-6 Organize drawing information	H-7 Control the display of drawings	H-8 Use intermediate drawing commands	H-9 Perform intermediate editing commands	H-10 Create multi view drawings	H-11 Create sectioned drawings	H-12 Investigate basic dimensioning	H-13 Perform advanced dimensioning
	H-14 Use and manipulate blocks	H-15 Use blocks to automate the drawing process											
I Perform Laser Materials Processing	I-1 Review laser safety standards	I-2 Discuss lasers used for materials processing	I-3 Discuss laser optics and beam characteristics	I-4 Investigate absorption of laser energy	I-5 Use lasers for welding and surface treatment	I-6 Use lasers for material removal							
J Perform Computer-Aided Manufacturing (CAM)	J-1 Discuss and understand the basics of a PC based CAM system	J-2 Discuss basic CAM operations	J-3 Set up cutting tools	J-4 Create simple part profiles	J-5 Create and edit complex part profiles	J-6 Perform roughing, drilling, and counterboring	J-7 Advanced editing of part profiles	J-8 Edit tool paths	J-9 Use construction layers in SmartCAM	J-10 Perform user commands and machine events	J-11 Create families of parts	J-12 Perform CAD/CAM integration	J-13 Perform code generation

LSR PM6
040698

816 A

Duty A

BEST COPY AVAILABLE

816 B

LSR-A2-LE
Discuss Basic Laser Principles
Attachment 2: **MASTER** Laboratory Exercise

Successful completion of this technical module will be based on the students' successful
completion of the following components:

a. Explain how a laser works;
b. Describe the basic elements of a laser;
c. Describe the different types of lasers; and,
d. Explain the different classifications of lasers.

LSR-A3-HO
Discuss Laser Hazards
Attachment 1: **MASTER** Handout

Objective(s):

Upon completion of this unit the student will be able to:

a. Discuss criteria for exposure of eye and skin; and,
b. Evaluate non-beam hazards.

Module Outline:

I. Discuss Laser Hazards
   A. Discuss criteria for exposure to eye and skin (ANSI Standards Z136.1)
      1. Intrabeam Viewing and Extended Source Ocular Exposures (Section 8.1)
      2. MPE for Ocular Exposures (Section 8.2)
      3. Special Qualifications for Ocular Exposures (Section 8.3)
      4. MPE for Skin Exposure to a Laser Beam (Section 8.4)
   B. Evaluate non-beam hazards (ANSI Standards Z136.1)
      1. Electrical Hazards (Section 7.2)
      2. Laser Generated Air Contaminants (Section 7.3)
      3. Collateral and Plasma Contaminants (Section 7.4)
      4. Fire Hazards (Section 7.5)
      5. Explosion Hazards (Section 7.6)
      6. Compressed Gases (Section 7.7)
      7. Laser Dyes (Section 7.8)

Successful completion of this technical module will be based on the students' successful completion of the following components:

a. Discuss the criteria for exposure to eye and skin with a laser; and,
b. Evaluate the non-beam hazards of a laser.

LSR-A4-HO
Discuss Control Measures
Attachment 1: **MASTER** Handout

Objective(s):

Upon completion of this unit the student will be able to:

a. Discuss engineering controls;
b. Discuss environmental controls; and,
c. Discuss administrative controls.

Module Outline:

I. Discuss Control Measures (ANSI Z136.1 Section 4)
   A. Discuss engineering controls
      1. Interlocks
      2. Remote controls
      3. Electronic hardware and software designed to keep levels to a controlled level
      4. Key operated switch
      5. Proper labels and warnings
      6. Emission indicators
      7. Beam attenuation
   B. Discuss environmental controls
      1. Controlled access
      2. Beam termination
      3. Enclosures and shielding
      4. Remote interlocks
      5. Laser activation warning systems
      6. Emission delays
      7. Laser safety eyewear
         a. Types (goggles, glasses, shields)
         b. Filtering, labeling, single and multiple wavelengths
         c. Optical densities
   C. Discuss administrative controls
      1. Access control
      2. Posting of warning signs
      3. Training of personnel
      4. Laser eye exams

LSR-A4-LE
Discuss Control Measures
Attachment 2: **MASTER** Laboratory Exercise

Successful completion of this technical module will be based on the students' successful completion of the following components:

a. Describe engineering controls;
b. Describe environmental controls; and,
c. Describe administrative controls.

Laser Machinist .... apply the principles of electronics, lasers, optics, materials, engineering documentation, CAD/CAM, and systems integration to manufacture products following current industry and company standards.

Duties	Tasks												
A Practice Laser Safety	A-1 Discuss laser safety standards	A-2 Discuss basic laser principles	A-3 Discuss laser hazards	A-4 Discuss control measures									
B Apply Mathematical Concepts	B-1 Perform basic mathematical functions	B-2 Perform algebraic functions	B-3 Study exponents and right triangle geometry	B-4 Study elements of plane and solid geometry	B-5 Perform data evaluation and statistical analysis	B-6 Perform proportioning and interpolation	B-7 Perform basic trigonometric calculations	B-8 Investigate vectors and vector systems	B-9 Investigate the Cartesian Coordiante System				
C Perform Measurement and Inspection	C-1 Study basics of metrology	C-2 Select instruments used for measurement	C-3 Study datums and the three plane concept	C-4 Select gauging tools	C-5 Use CMM for location of features	C-6 Perform measurements for orientation tolerances	C-7 Perform measurment by optical comparison	C-8 Perform measurements for circularity, concentricity, runout, and straightness tolerances	C-9 Investigate advanced metrology topics				
D Troubleshoot Industrial Electronics and Control	D-1 Perform DC voltage, current, and power measurements	D-2 Perform AC voltage, current, and power measurements	D-3 Investigate digital logic systems	D-4 Investigate diode applications	D-5 Investigate transistors and thyristors	D-6 Investigate operational amplifiers	D-7 Investigate power supply circuits						
E Apply Concepts of Modern Optics	E-1 Study reflection and refraction at plane surfaces	E-2 Perform imaging with a single lens	E-3 Perform imaging with multiple lenses	E-4 Study F-stops and apertures	E-5 Use laser beam-expanding collimators	E-6 Study interference	E-7 Study diffraction	E-8 Study polarization	E-9 Investigate radiometry and photometry				
F Perform CNC Machining	F-1 Apply machine specific nomenclature and terminology	F-2 Investigate the Cartesian coordinate system as applied to a CNC mill or laser	F-3 Apply CNC programming language	F-4 Perform start up, tool changing, and ending of programs	F-5 Perform positioning and basic drilling	F-6 Create a sub-program	F-7 Perform contouring	F-8 Apply tool radius compensation	F-9 Perform program preparation	F-10 Apply special laser coding parameters			
G Investigate Industrial Laser Systems	G-1 Review characteristics of light	G-2 Investigate emission and absorption of light	G-3 Discuss optical cavities and laser modes	G-4 Discuss temporal characteristics of lasers	G-5 Investigate spatial characteristics of lasers	G-6 Discuss laser classifications and characteristics							
H Perform Computer-Aided Drafting (CAD)	H-1 Discuss and understand PC basics	H-2 Discuss CAD basics and file management	H-3 Use drawing settings	H-4 Perform basic editing commands	H-5 Create drawings with accuracy	H-6 Organize drawing information	H-7 Control the display of drawings	H-8 Use intermediate drawing commands	H-9 Perform intermediate editing commands	H-10 Create multiview drawings	H-11 Create sectioned drawings	H-12 Investigate basic dimensioning	H-13 Perform advanced dimensioning
	H-14 Use and manipulate blocks	H-15 Use blocks to automate the drawing process											
I Perform Laser Materials Processing	I-1 Review laser safety standards	I-2 Discuss lasers used for materials processing	I-3 Discuss laser optics and beam characteristics	I-4 Investigate absorption of laser energy	I-5 Use lasers for welding and surface treatment	I-6 Use lasers for material removal							
J Perform Computer-Aided Manufacturing (CAM)	J-1 Discuss and understand the basics of a PC based CAM system	J-2 Discuss basic CAM operations	J-3 Set up cutting tools	J-4 Create simple part profiles	J-5 Create and edit complex part profiles	J-6 Perform roughing, drilling, and counterboring	J-7 Advanced editing of part profiles	J-8 Edit tool paths	J-9 Use construction layers in SmartCAM	J-10 Perform user commands and machine events	J-11 Create families of parts	J-12 Perform CAD/CAM integration	J-13 Perform code generation

LSD PM4
040603

BEST COPY AVAILABLE

Duty B

LSR-B1-HO
Perform Basic Mathematical Functions
Attachment 1: **MASTER** Handout

Objective(s):

Upon completion of this unit the student will be able to:

a. Use and manipulate fractions;
b. Use and manipulate decimals;
c. Calculate percentages;
d. Calculate units of length, area, and volume;
e. Convert between SI (metric) and English (inch) units; and,
f. Use a scientific calculator.

Module Outline:

I. Perform Basic Mathematical Functions
   A. Use and manipulate fractions
   B. Use and manipulate decimals
   C. Calculate percentages
   D. Calculate units of length, area, and volume
   E. Convert between SI (metric) and English (inch) units
   F. Use a scientific calculator

Successful completion of this technical module will be based on the students' successful demonstration of the following concepts:

a. Use and manipulate fractions;
b. Use and manipulate decimals;
c. Calculate percentages;
d. Calculate units of length, area, and volume;
e. Convert between SI (metric) and English (inch) units; and,
f. Use a scientific calculator.

LSR-B2-HO
Perform Algebraic Functions
Attachment 1: **MASTER** Handout

Objective(s):

Upon completion of this unit the student will be able to:

a. Identify equations with one unknown;
b. Solve algebraic equations by isolation of the unknown;
c. Identify equations with fractions;
d. Solve equations by cross multiplying;
e. Identify and solve linear equations; and,
f. Calculate the slope of a line.

Module Outline:

I. Perform Algebraic Functions
   A. Identify equations with one unknown
   B. Solve algebraic equations by isolation of the unknown
   C. Identify equations with fractions
   D. Solve equations by cross multiplying
   E. Identify and solve linear equations
   F. Calculate the slope of a line

Successful completion of this technical module will be based on the students' successful demonstration of the following concepts:

a. Identify equations with one unknown;
b. Solve algebraic equations by isolation of the unknown;
c. Identify equations with fractions;
d. Solve equations by cross multiplying;
e. Identify and solve linear equations; and,
f. Calculate the slope of a line.

LSR-B3-HO
Study Exponents and Right Triangle Geometry
Attachment 1: **MASTER** Handout

Objective(s):

Upon completion of this unit the student will be able to:

a. Apply the laws of exponents;
b. Calculate exponential functions and roots;
c. Analyze right triangles; and,
d. Use Pythagorean Theorem.

Module Outline:

I. Study Exponents and Right Triangle Geometry
   A. Apply the laws of exponents
   B. Calculate exponential functions and roots
   C. Analyze right triangles
   D. Use Pythagorean Theorem

Successful completion of this technical module will be based on the students' successful demonstration of the following concepts:

a. Apply the laws of exponents;
b. Calculate exponential functions and roots;
c. Analyze right triangles; and,
d. Use Pythagorean Theorem.

LSR-B4-HO
Study Elements of Plane and Solid Geometry
Attachment 1: **MASTER** Handout

Objective(s):

Upon completion of this unit the student will be able to:

a. Calculate the area and circumference of a circle;
b. Determine angular measurements (degrees and radians);
c. Establish a tangent to a circle;
d. Analyze parallel lines, transverse lines, and angles;
e. Perform the bisection of an angle;
f. Calculate the sum of the interior angles of a polygon;
g. Calculate the area of a triangle and irregular shapes; and,
h. Analyze trapezoids.

Module Outline:

I. Study Exponents and Right Triangle Geometry
   A. Calculate the area and circumference of a circle
   B. Determine angular measurements (degrees and radians)
   C. Establish a tangent to a circle
   D. Analyze parallel lines, transverse lines, and angles
   E. Perform the bisection of an angle
   F. Calculate the sum of the interior angles of a polygon
   G. Calculate the area of a triangle and irregular shapes
   H. Analyze trapezoids

Successful completion of this technical module will be based on the students' successful demonstration of the following concepts:

a. Calculate the area and circumference of a circle;
b. Determine angular measurements (degrees and radians);
c. Establish a tangent to a circle;
d. Analyze parallel lines, transverse lines, and angles;
e. Perform the bisection of an angle;
f. Calculate the sum of the interior angles of a polygon;
g. Calculate the area of a triangle and irregular shapes; and,
h. Analyze trapezoids.

LSR-B5-HO

Perform Data Evaluation and Statistical Analysis

Attachment 1: MASTER Handout

Objective(s):

Upon completion of this unit the student will be able to:

a. Analyze and plot data;
b. Create graphs (line, bar, and pie); and,
c. Calculate mean, normal, and standard deviation.

Module Outline:

I. Perform Data Evaluation and Statistical Analysis
   A. Analyze and plot data
   B. Create graphs (line, bar, and pie)
   C. Calculate mean, normal, and standard deviation

Successful completion of this technical module will be based on the students' successful demonstration of the following concepts:

a. Analyze and plot data;
b. Create graphs (line, bar, and pie); and,
c. Calculate mean, normal, and standard deviation.

LSR-B6-HO
Perform Proportioning and Interpolation
Attachment 1: **MASTER** Handout

Objective(s):

Upon completion of this unit the student will be able to:

a. Calculate ratios and proportions;
b. Calculate direct, inverse, and combined variations;
c. Calculate constants of proportionality; and,
d. Perform tabular interpolation.

Module Outline:

I. Perform Proportioning and Interpolation
   A. Calculate ratios and proportions
   B. Calculate direct, inverse, and combined variations
   C. Calculate constants of proportionality
   D. Perform tabular interpolation

LSR-B6-LE
Perform Proportioning and Interpolation
Attachment 2: **MASTER** Laboratory Exercise

Successful completion of this technical module will be based on the students' successful demonstration of the following concepts:

a. Calculate ratios and proportions;
b. Calculate direct, inverse, and combined variations;
c. Calculate constants of proportionality; and,
d. Perform tabular interpolation.

LSR-B7-HO
Perform Basic Trigonometric Calculations
Attachment 1: **MASTER** Handout

Objective(s):

Upon completion of this unit the student will be able to:

a. Calculate the trigonometric functions of sine, cosine, and tangent;
b. Calculate ratios and proportions;
c. Calculate the inverse trigonometric functions of arcsine, arccosine, and arctangent;
d. Calculate direct, inverse, and combined variations; and,
e. Solve a right triangle.

Module Outline:

I. Perform Basic Trigonometric Calculations
   A. Calculate the trigonometric functions of sine, cosine, and tangent
   B. Calculate ratios and proportions
   C. Calculate the inverse trigonometric functions of arcsine, arccosine, and arctangent
   D. Calculate direct, inverse, and combined variations
   E. Solve a right triangle

Successful completion of this technical module will be based on the students' successful demonstration of the following concepts:

a. Calculate the trigonometric functions of sine, cosine, and tangent;
b. Calculate ratios and proportions;
c. Calculate the inverse trigonometric functions of arcsine, arccosine, and arctangent;
d. Calculate direct, inverse, and combined variations; and,
e. Solve a right triangle.

LSR-B8-HO
Investigate Vectors and Vector Systems
Attachment 1: **MASTER** Handout

Objective(s):

Upon completion of this unit the student will be able to:

a. Analyze components of vectors;
b. Perform vector addition; and,
c. Perform vector combination.

Module Outline:

I. Investigate Vectors and Vector Systems
   A. Analyze components of vectors
   B. Perform vector addition
   C. Perform vector combination

ERIC

Successful completion of this technical module will be based on the students' successful demonstration of the following concepts:

a. Demonstrate an understanding of the components of vectors;
b. Perform vector addition;
c. Calculate direct, inverse, and combined variations; and,
d. Perform vector combination.

LSR-B9-HO
Investigate the Cartesian Coordinate System
Attachment 1: **MASTER** Handout

Objective(s):

Upon completion of this unit the student will be able to:

a. Study the X-Y coordinate system;
b. Study the X-Y-Z coordinate system; and,
c. Calculate the slope of a line in the Cartesian coordinate system.

Module Outline:

I. Investigate the Cartesian Coordinate System
   A. Study the X-Y coordinate system
   B. Study the X-Y-Z coordinate system
   C. Calculate the slope of a line in the Cartesian coordinate system

LSR-B9-LE
Investigate the Cartesian Coordinate System
Attachment 2: **MASTER** Laboratory Exercise

Successful completion of this technical module will be based on the students' successful demonstration of the following concepts:

a. Plot data in the X-Y coordinate system;
b. Plot data in the X-Y-Z coordinate system; and,
c. Calculate the slope of a line in the Cartesian coordinate system.

Laser Machinist .... apply the principles of electronics, lasers, optics, materials, engineering documentation, CAD/CAM, and systems integration to manufacture products following current industry and company standards.

Duties	Tasks												
A Practice Laser Safety	A-1 Discuss laser safety standards	A-2 Discuss basic laser principles	A-3 Discuss laser hazards	A-4 Discuss control measures									
B Apply Mathematical Concepts	B-1 Perform basic mathematical functions	B-2 Perform algebraic functions	B-3 Study exponents and right triangle geometry	B-4 Study elements of plane and solid geometry	B-5 Perform data evaluation and statistical analysis	B-6 Perform proportioning and interpolation	B-7 Perform basic trigonometric calculations	B-8 Investigate vectors and vector systems	B-9 Investigate the Cartesian Coordiante System				
C Perform Measurement and Inspection	C-1 Study basics of metrology	C-2 Select instruments used for measurement	C-3 Study datums and the three plane concept	C-4 Select gauging tools	C-5 Use CMM for location of features	C-6 Perform measurements for orientation tolerances	C-7 Perform measurment by optical comparison	C-8 Perform measurements for circularity, concentricity, runout, and straightness tolerances	C-9 Investigate advanced metrology topics				
D Troubleshoot Industrial Electronics and Control	D-1 Perform DC voltage, current, and power measurements	D-2 Perform AC voltage, current, and power measurements	D-3 Investigate digital logic systems	D-4 Investigate diode applications	D-5 Investigate transistors and thyristors	D-6 Investigate operational amplifiers	D-7 Investigate power supply circuits						
E Apply Concepts of Modern Optics	E-1 Study reflection and refraction at plane surfaces	E-2 Perform imaging with a single lens	E-3 Perform imaging with multiple lenses	E-4 Study F-stops and apertures	E-5 Use laser beam-expanding collimators	E-6 Study interference	E-7 Study diffraction	E-8 Study polarization	E-9 Investigate radiometry and photometry				
F Perform CNC Machining	F-1 Apply machine specific nomenclature and terminology	F-2 Investigate the Cartesian coordinate system as applied to a CNC mill or laser	F-3 Apply CNC programming language	F-4 Perform start up, tool changing, and ending of programs	F-5 Perform positioning and basic drilling	F-6 Create a sub-program	F-7 Perform contouring	F-8 Apply tool radius compensation	F-9 Perform program preparation	F-10 Apply special laser coding parameters			
G Investigate Industrial Laser Systems	G-1 Review characteristics of light	G-2 Investigate emission and absorption of light	G-3 Discuss optical cavities and laser modes	G-4 Discuss temporal characteristics of lasers	G-5 Investigate spatial characteristics of lasers	G-6 Discuss laser classifications and characteristics							
H Perform Computer-Aided Drafting (CAD)	H-1 Discuss and understand PC basics	H-2 Discuss CAD basics and file management	H-3 Use drawing settings	H-4 Perform basic editing commands	H-5 Create drawings with accuracy	H-6 Organize drawing information	H-7 Control the display of drawings	H-8 Use intermediate drawing commands	H-9 Perform intermediate editing commands	H-10 Create multi view drawings	H-11 Create sectioned drawings	H-12 Investigate basic dimensioning	H-13 Perform advanced dimensioning
	H-14 Use and manipulate blocks	H-15 Use blocks to automate the drawing process											
I Perform Laser Materials Processing	I-1 Review laser safety standards	I-2 Discuss lasers used for materials processing	I-3 Discuss laser optics and beam characteristics	I-4 Investigate absorption of laser energy	I-5 Use lasers for welding and surface treatment	I-6 Use lasers for material removal							
J Perform Computer-Aided Manufacturing (CAM)	J-1 Discuss and understand the basics of a PC based CAM system	J-2 Discuss basic CAM operations	J-3 Set up cutting tools	J-4 Create simple part profiles	J-5 Create and edit complex part profiles	J-6 Perform roughing, drilling, and counterboring	J-7 Advanced editing of part profiles	J-8 Edit tool paths	J-9 Use construction layers in SmartCAM	J-10 Perform user commands and machine events	J-11 Create families of parts	J-12 Perform CAD/CAM integration	J-13 Perform code generation

LSR PM4
040698

BEST COPY AVAILABLE

Duty C

LSR-C1-HO
Study Basics of Metrology
Attachment 1: **MASTER** Handout

Objective(s):

Upon completion of this unit the student will be able to:

a. Discuss the reasons for measurements;
b. Study the language of measurement;
c. Determine how to convert between SI and English systems;
d. Interpret dimensions;
e. Study the use of tolerances;
f. Study the requirements of ANSI Y14.5;
g. Study the three fundamental rules of ANSI Y14.5; and,
h. Interpret the definition of virtual condition.

Module Outline:

I. Study Basics of Metrology
   A. Discuss the reasons for measurements
   B. Study the language of measurement
   C. Determine how to convert between SI and English systems
   D. Interpret dimensions
   E. Study the use of tolerances
   F. Study the requirements of ANSI Y14.5
   G. Study the three fundamental rules of ANSI Y14.5
   H. Interpret the definition of virtual condition

ERIC

LSR-C1-LE
Study Basics of Metrology
Attachment 2: **MASTER** Laboratory Exercise

Successful completion of this technical module will be based on the students' successful completion of the following components:

a. Discuss the reasons for measurements;
b. Demonstrate an understanding of the language of measurement;
c. Convert between SI and English systems;
d. Interpret dimensions;
e. Demonstrate an understanding of use of tolerances;
f. Demonstrate an understanding of the requirements of ANSI Y14.5;
g. Demonstrate an understanding of the three fundamental rules of ANSI Y14.5; and,
h. Define and calculate virtual condition.

LSR-C2-HO
Select Instruments Used for Measurement
Attachment 1: **MASTER** Handout

Objective(s):

Upon completion of this unit the student will be able to:

a. Use vernier calipers;
b. Use dial calipers;
c. Read scales;
d. Use micrometers;
e. Use hole and depth micrometers; and,
f. Set up and use dial indicators.

Module Outline:

I. Select Instruments Used for Measurement
   A. Use vernier calipers
   B. Use dial calipers
   C. Read scales
   D. Use micrometers
   E. Use hole and depth micrometers
   F. Set up and use dial indicators

Successful completion of this technical module will be based on the students' successful completion of the following components:

a. Demonstrate correct usage of vernier calipers;
b. Demonstrate correct usage of dial calipers;
c. Demonstrate how to correctly read scales;
d. Demonstrate correct usage of micrometers;
e. Demonstrate correct usage of hole and depth micrometers; and,
f. Demonstrate proper set up and usage of dial indicators.

LSR-C3-HO
Study Datums and the Three Plane Concept
Attachment 1: **MASTER** Handout

Objective(s):

Upon completion of this unit the student will be able to:

a. Discuss the use of datums;
b. Discuss the three-plane system: primary, secondary, and tertiary;
c. Discuss the use of material condition symbols (MMC, LMC, RFS); and,
d. Discuss the use of target points to define datums.

Module Outline:

I. Study Datums and the Three Plane Concept
   A. Discuss the use of datums
   B. Discuss the three-plane system: primary, secondary, and tertiary
   C. Discuss the use of target points to define datums
   D. Discuss the use of material condition symbols (MMC, LMC, RFS)

Successful completion of this technical module will be based on the students' successful completion of the following components:

a. Demonstrate an understanding of the use of datums;
b. Demonstrate an understanding of the three-plane system: primary, secondary, and tertiary;
c. Demonstrate an understanding of the use of material condition symbols (MMC, LMC, RFS); and,
d. Demonstrate an understanding of the use of target points to define datums.

ERIC

LSR-C4-HO
Select Gauging Tools
Attachment 1: **MASTER** Handout

Objective(s):

Upon completion of this unit the student will be able to:

a. Use gage blocks;
b. Use plug (pin) gages;
c. Use a height gage;
d. Use "Go/No Go" gages; and,
e. Design and build functional gages.

Module Outline:

I. Select Gauging Tools
   A. Use gage blocks
   B. Use plug (pin) gages
   C. Use a height gage
   D. Use "go/no go" gages
   E. Design and build functional gages

Successful completion of this technical module will be based on the students' successful completion of the following components:

a. Demonstrate correct usage of gage blocks;
b. Demonstrate correct usage of plug gages;
c. Demonstrate correct usage of a height gage;
d. Demonstrate correct usage of "Go/No Go" gages; and,
e. Demonstrate how to design and build functional gages.

LSR-C5-HO
Use CMM for Location of Features
Attachment 1: **MASTER** Handout

Objective(s):

Upon completion of this unit the student will be able to:

a. Assess the importance of Coordinate Measurement machines (CMM);
b. Set up and use a CMM;
c. Calibrate a CMM;
d. Set up and measure hole locations with respect to applicable datums;
e. Set up and measure location for non-cylindrical features;
f. Set up and measure location for multiple pattern features; and,
g. Set up and measure the projected tolerance zone.

Module Outline:

I. Use CMM for Location of Features
   A. Assess the importance of Coordinate Measurement machines (CMM)
   B. Set up and use a CMM
   C. Calibrate a CMM
   D. Set up and measure hole locations with respect to applicable datums
   E. Set up and measure location for non-cylindrical features
   F. Set up and measure location for multiple pattern features
   G. Set up and measure the projected tolerance zone

Successful completion of this technical module will be based on the students' successful completion of the following components:

a. Discuss the importance of Coordinate Measurement machines (CMM);
b. Demonstrate the ability to set up and use a CMM;
c. Demonstrate and understanding of CMM Calibration;
d. Set up and measure hole locations with respect to applicable datums;
e. Set up and measure location for non-cylindrical features;
f. Set up and measure location for multiple pattern features; and,
g. Set up and measure the projected tolerance zone.

Operation Sheet for Drilled Block

Material: Aluminum

1. Mill block square 6 sides
2. Mill thickness to .750
3. Mill width to 1.875
4. Mill length to 4.875
5. Put layout Dykem on part
6. Layout all dimensions with height gauge
7. Center punch .500 dia. and .750 dia. holes
8. Center drill .500 dia. and .750 dia. holes on drill press
9. Set-up the edge finder in the vertical mill, locate the remaining holes and center drill these holes
10. Drill and ream .500 and .750 holes on the drill press
    (Allow 1/64 for reaming on these holes)
11. Drill remaining holes on vertical miller
    (Make sure not to drill into the parallels)
12. Counterbore .250 holes on drill press
13. Chamfer all holes 1/16 on drill press both sides
14. Tap 10-32 holes using hand taper

LSR-C5-LW1
Use CMM for Location of Features
Attachment 3: MASTER Laboratory Worksheet No. 1
Page 2 of 2

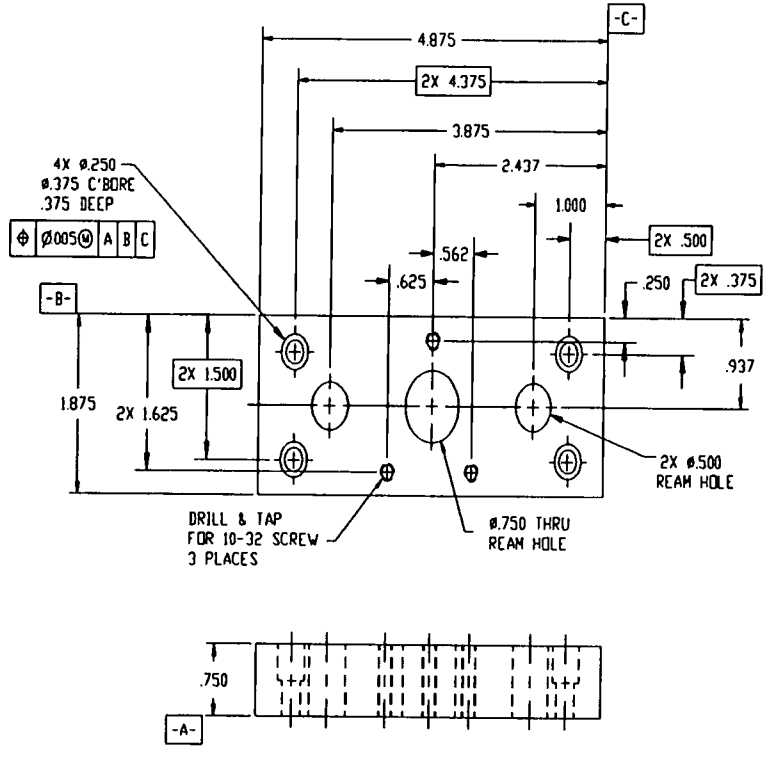

855

856

NOTES: UNLESS OTHERWISE SPECIFIED
LIMITS ON TOLERANCES ARE ±.005
BREAK ALL SHARP EDGES

PART NAME: DRILLED BLOCK

BEST COPY AVAILABLE

LSR-C5-LW2
Use CMM for Location of Features
Attachment 4: **MASTER** Laboratory Worksheet No. 2

Inspection Report: Drilled Block

Directions for inspection:

A. Measure using CMM if available or steel rules, dial calipers, micrometers, gage blocks, gage pins, or as appropriate to determine the actual sizes and locations of the features.

B. Place the measured (actual) size and location next to the stated dimension on the print.

C. For the true position features: use CMM if available, or calipers, gage blocks, gage pins, etc. to inspect each counterbored hole for the stated geometric position which is stated on the print. Record the actual position measured next to the basic dimension as shown on the print. Record next to each feature on the print the size measured.

D. Record on this sheet the part name, part number, and the members of your inspection team.

E. Staple this sheet to the blueprint and hand it in when complete.

Note: Be sure to have an inspection report and a part print for each part inspected.

Part Name _____ Part Number _____

Part inspected by: _____

_____

_____

_____

Rules of Conduct

1. Absolutely no horseplay or practical joking will be tolerated.
2. Do not talk to anyone who is operating a machine.
3. Walk only in the designated traffic lanes.
4. Dress appropriately; at the absolute minimum, you must have:
   a. No loose clothing, including ties;
   b. Long hair properly stowed;
   c. No jewelry;
   d. Hard, closed-toe shoes;
   e. Eye protection (safety glasses); and,
   f. Ear protection (plugs or headset).
5. Follow all institutional safety rules.

LSR-C6-HO
Perform Measurements for Orientation Tolerances
Attachment 1: **MASTER** Handout

Objective(s):

Upon completion of this unit the student will be able to:

a. Study and use surface plates;
b. Use angle plates, sine plates, mandrels, and vee blocks;
c. Set up and measure the flatness of a surface; and,
d. Set up and measure perpendicularity, angularity, and parallelism tolerances.

Module Outline:

I. Perform Measurements for Orientation Tolerances
   A. Study and use surface plates
   B. Study and use angle plates, sine plates, mandrels, and vee blocks
   C. Set up and measure the flatness of a surface
   D. Set up and measure the perpendicularity, angularity, and parallelism of two surfaces
   E. Set up and measure the profile of a surface
   F. Set up and measure the straightness of a feature

Successful completion of this technical module will be based on the students' successful completion of the following components:

a. Demonstrate an understanding of the use of surface plates;
b. Demonstrate an understanding of the use of angle plates, sine plates, mandrels, and vee blocks;
c. Set up and measure the flatness of a surface;
d. Set up and measure the perpendicularity of two surfaces;
e. Set up and measure the angularity of two surfaces; and,
f. Set up and measure the parallelism of two surfaces.

Operation Sheet: Triangle

1. Cut .25 x 3.0 steel stock to approx. 5.25 long
2. Mill length of piece to clean only
3. Layout hole locations and slots with vernier height gage
4. Set up a positive stop, establishing datums to the left and at the solid jaw of vise
5. Locate and spot 11 places
6. Locate, drill, and ream .4375 diameter
7. Locate and drill .297 diameter (8) places
8. Locate and ream (8) places
9. Locate, drill, and ream ends of elongated slot
10. Using .250 end mill, rough out center of .375 slot
11. Using saddle dial, progressively mill to first wall
    (First wall is determined by the direction in which backlash has been removed)
12. Mill second wall to complete slot
13. Invert piece and cause to bear against positive stop
14. Repeat operations 5-12
15. Layout 30 degrees
16. Saw piece in two, using caution not to cut into scribe lines
17. Leaving stock for grinding, mill 30-degree angles
18. Finish grind to clean only the largest surfaces (.25 dim.)
19. Grind base of triangle parallel to elongated slot
20. Grind short side perpendicular to Datum -B-
21. Using sine bar and gage blocks, grind 30 degrees
22. Deburr

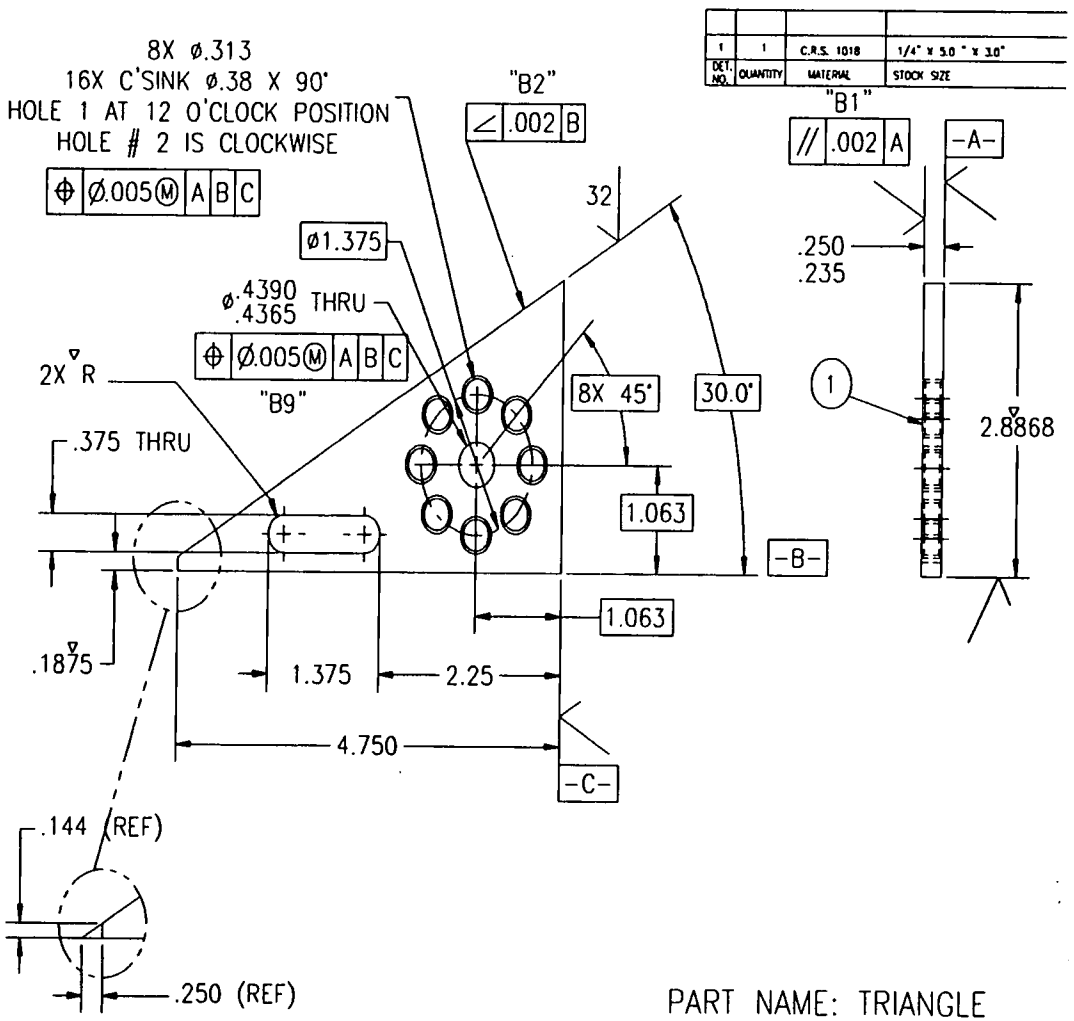

862

863

BEST COPY AVAILABLE

PART NAME: TRIANGLE

Triangle Inspection Sheet

Student Names: _____
_____
_____

B1 (Parallelism) Dim _____
B2 (Angularity) Dim _____
B9 (True Position) Within tolerance? _____

Inspection of 8 holes on 1.375 Dia Bolt Circle

Hole # 1 True Position to Datum A _____ True Position to Datum B _____	Hole # 5 True Position to Datum A _____ True Position to Datum B _____
Hole # 2 True Position to Datum A _____ True Position to Datum B _____	Hole # 6 True Position to Datum A _____ True Position to Datum B _____
Hole # 3 True Position to Datum A _____ True Position to Datum B _____	Hole # 7 True Position to Datum A _____ True Position to Datum B _____
Hole # 4 True Position to Datum A _____ True Position to Datum B _____	Hole # 8 True Position to Datum A _____ True Position to Datum B _____

Block 1 - Operation Sheet

Demos: **Mill block square, edge finder, digital readout, height gage, dial caliper**

1. Mill block square and parallel
2. Layout location for the .750 x .750 slot
   (Use layout dye and height gauge)
3. Use an endmill (smaller than .750 dia.) to pick up the edge of the part, then mill the slot to size

Tools

This is not a complete list but you will need the following tools during the project.

1. Dead blow hammer
2. 6" rule
3. Coolant
4. 6" dial caliper
5. File
6. Square
7. End mills
   Note: Be sure to measure the endmill diameter to determine the proper R.P.M.

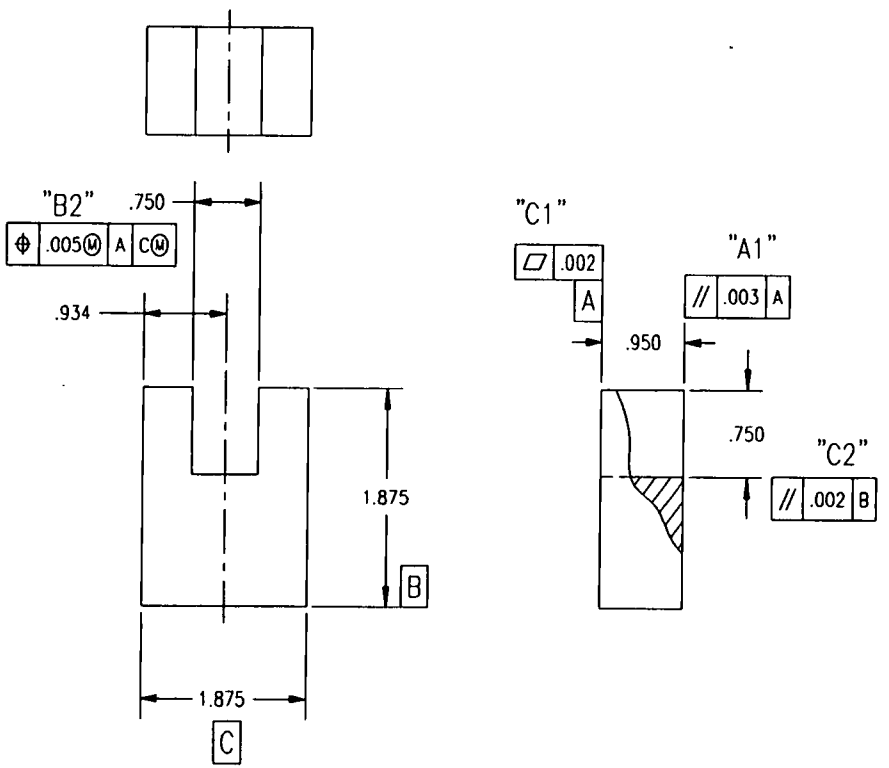

PART NAME: BLOCK1

BEST COPY AVAILABLE

Block 1 Inspection Master Sheet

Student Names: _____
_____
_____

Block Serial Number: _____

A1 (Parallelism)_____DIM. _____

B2 (True Position)_____DIM. _____

C1 (Flatness)_____DIM. _____

C2 (Parallelism)_____DIM. _____

Block 2 - Operation Sheet

Demos: Mill block square, edge finder, digital readout, height gage, dial caliper

1. Mill block square and parallel
2. Layout 6x .375 dia. holes
   (Use layout dye and height gauge)
3. Use an edge finder to pick up the edge of the part, then centerdrill all the holes
4. Drill the 6x .375 dia. holes (leave .010 - .015 per surface for finish)
5. Ream the 6x .375 dia. holes to size

Tools

This is not a complete list but you will need the following tools during the project.

1. Dead blow hammer
2. 6" rule
3. Coolant
4. 6" dial caliper
5. File
6. Square
7. Drills - 1/64 smaller than reamed size, center drill, reamers
8. End mills - Be sure to measure the endmill diameter to determine the proper R.P.M.
9. Edge finder - Use 660 R.P.M.

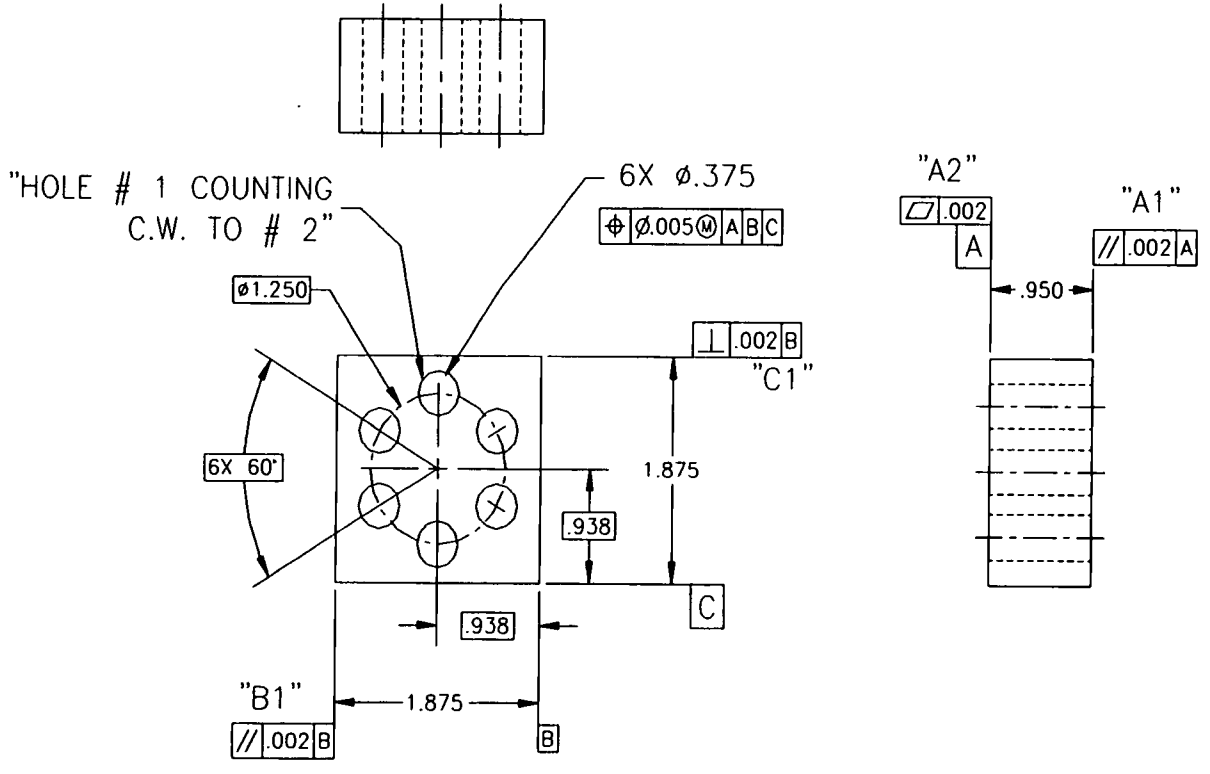

870

871

PART NAME: BLOCK 2

BEST COPY AVAILABLE

Block 2 Inspection Sheet

Student Names: _____
_____
_____

Block 2 Serial Number _____

A1 (Parallelism) _____ DIM._____

A2 (Flatness) _____ DIM._____

B1 (Parallelism) _____ DIM._____

C1(Perpendicularity) _____ DIM._____

True Position tolerances of 6 holes on 1.25 dia bolt circle

Hole # 1 True Position to Datum B _____ True Position to Datum C _____	Hole # 5 True Position to Datum B _____ True Position to Datum C _____
Hole # 2 True Position to Datum B _____ True Position to Datum C _____	Hole # 6 True Position to Datum B _____ True Position to Datum C _____
Hole # 3 True Position to Datum B _____ True Position to Datum C _____	Hole # 7 True Position to Datum B _____ True Position to Datum C _____
Hole # 4 True Position to Datum B _____ True Position to Datum C _____	Hole # 8 True Position to Datum B _____ True Position to Datum C _____

Rules of Conduct

1. Absolutely no horseplay or practical joking will be tolerated.
2. Do not talk to anyone who is operating a machine.
3. Walk only in the designated traffic lanes.
4. Dress appropriately; at the absolute minimum, you must have:
   a. No loose clothing, including ties;
   b. Long hair properly stowed;
   c. No jewelry;
   d. Hard, closed-toe shoes;
   e. Eye protection (safety glasses); and,
   f. Ear protection (plugs or headset).
5. Follow all institutional safety rules.

LSR-C7-HO
Perform Measurement by Optical Comparison
Attachment 1: **MASTER** Handout

Objective(s):

Upon completion of this unit the student will be able to:

a. Study and use an optical comparator;
b. Create charts from CAD systems to use as overlays;
c. Determine the scaling principle used in optical comparison;
d. Assess the accuracy of an optical comparator;
e. Set up and measure the profile of a line; and,
f. Set up and measure the profile of a surface.

Module Outline:

I. Perform Measurement by Optical Comparison
   A. Study and use an optical comparator
   B. Create charts from CAD systems to use as overlays
   C. Determine the scaling principle used in optical comparison
   D. Assess the accuracy of an optical comparator
   E. Set up and measure the profile of a line
   F. Set up and measure the profile of a surface

Successful completion of this technical module will be based on the students' successful completion of the following components:

a. Demonstrate an understanding of the use of an optical comparator;
b. Demonstrate how to create charts from CAD systems to use as overlays;
c. Determine the scaling principle used in optical comparison;
d. Demonstrate an understanding of the accuracy of an optical comparator; and,
e. Set up and measure the profile of a line and surface.

LSR-C7-LW1
Perform Measurement by Optical Comparison
Attachment 3: MASTER Laboratory Worksheet No. 1

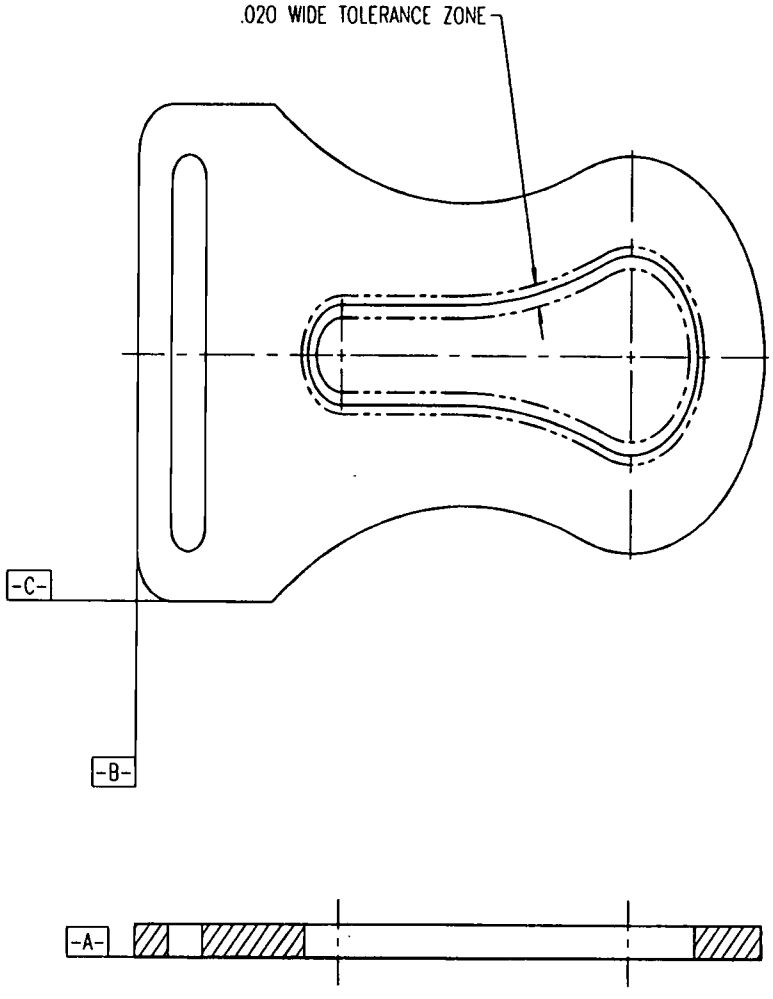

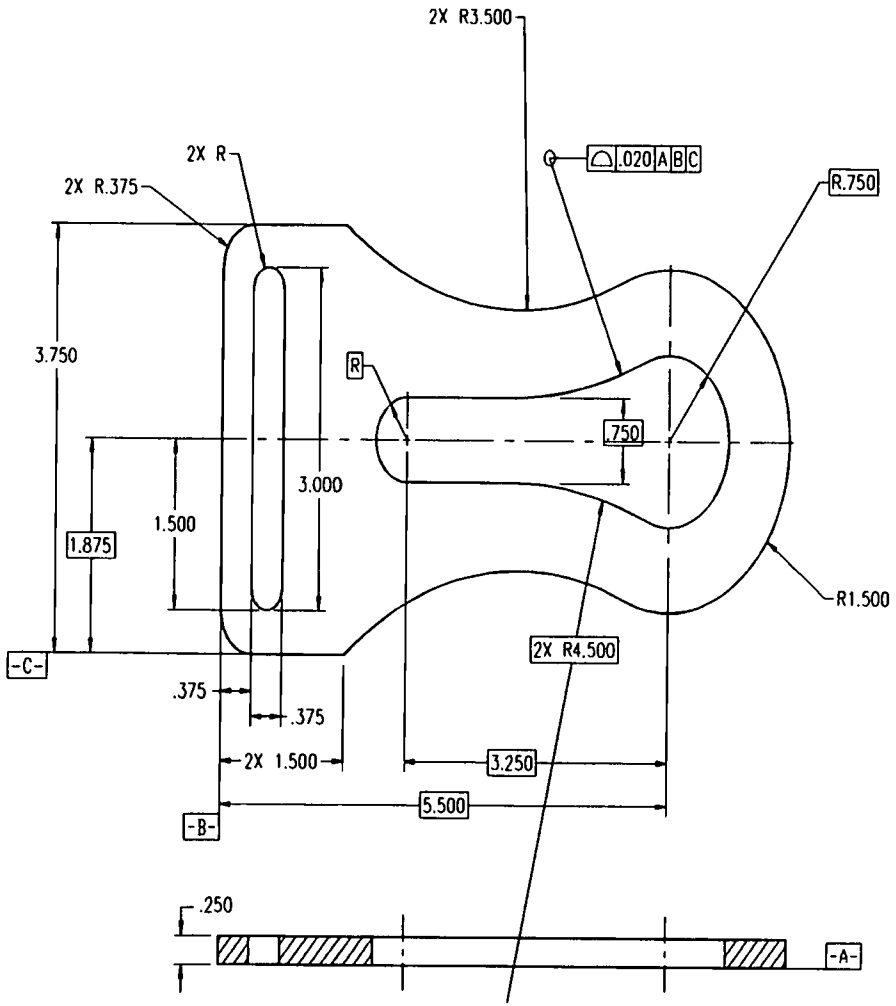
2X R3.500
2X R
2X R.375
.020 A B C
R.750
3.750
R
.750
3.000
1.500
1.875
R1.500
2X R4.500
-C-
.375
.375
2X 1.500
3.250
5.500
-B-
.250
-A-

873

Rules of Conduct

1. Absolutely no horseplay or practical joking will be tolerated.
2. Do not talk to anyone who is operating a machine.
3. Walk only in the designated traffic lanes.
4. Dress appropriately; at the absolute minimum, you must have:
   a. No loose clothing, including ties;
   b. Long hair properly stowed;
   c. No jewelry;
   d. Hard, closed-toe shoes;
   e. Eye protection (safety glasses); and,
   f. Ear protection (plugs or headset).
5. Follow all institutional safety rules.

LSR-C8-HO
Perform Measurements for Circularity, Concentricity, Runout, and Straightness Tolerances
Attachment 1: **MASTER** Handout

Objective(s):

Upon completion of this unit the student will be able to:

a. Set up and measure the circularity of round features;
b. Set up and measure the runout and total runout of round features;
c. Set up and measure the straightness of a feature; and,
d. Set up and measure two features for coplanarity, concentricity, or coaxility.

Module Outline:

I. Perform Measurements for Circularity, Concentricity, Runout, and Straightness Tolerances
   A. Set up and measure the circularity of round features
   B. Set up and measure the runout and total runout of round features
   C. Set up and measure the straightness of a feature
   D. Set up and measure two features for coplanarity, concentricity, or coaxility

LSR-C8-LE
Perform Measurements for Circularity, Concentricity, Runout, and Straightness Tolerances
Attachment 2: **MASTER** Laboratory Exercise

Successful completion of this technical module will be based on the students' successful completion of the following components:

a. Set up and measure the circularity of round features;
b. Set up and measure the runout and total runout of round features;
c. Set up and measure the straightness of a feature; and,
d. Set up and measure two features for coplanarity, concentricity, or coaxility.

Operation Sheet for Bushing

1. Start with stock: 3.00 dia with a length greater than 2.50.
2. Tighten stock in lathe chuck with the part tight against the back of the chuck. (The diameter is too large to fit through the chuck center so push the part in as far as possible.)
3.* Face to clean (remove just enough stock to clean end the part). ***Caution: You must take very small cuts (.015 max!).***
4.* Center drill (#4 center drill) to 3\16 dia.
5.* Turn the 2.950 diameter length to 2.50 length.
6.* Turn the 1.5 diameter to 2.125 length. (Stay about .010-.020 off the face and .030 oversize on the dia. You are looking for a size of about 1.530 dia. x 1.115 length.)
7.* Face and turn the 1.500 dia. x 2.125 length to size.
8.* Step drill the .750 hole first using a .500 dia. drill followed by the .750 dia. drill.
9. Using the parting tool, square the tool to the front of the chuck to assure squareness. Set the RPM to 110 and manually cut off the part to a length of 2.625. (***This is .125 longer than the total length of the part. Make sure the right side of the blade is set to 2.625!***)
10.* Place the 2.125 x 1.500 dia. in the chuck and face the part to the 2.500 length.
11.* Set up your facing tool for we will use the facing tool to make the 1.500 dia. x .125 counterbore.

* ***Means calculate rpm for these steps.***

Tools Required

1. 2 OD. Mic.
2. 6 in. rule
3. #4 center drill
4. Lathe facing tool
5. Right hand lathe turning tool
6. Allen wrench set
7. Rags from crib
8. Coolant

Speed Rpm

Spindle speed is calculated from the formula:

RPM = cutting speed * (4) / dia of work
cutting speed = surface feet per min.
S.F.M. for aluminum = 600

Feed Rate

Rough turning .096 i.p.r. finish turning .006 i.p.r.

Depth of Cut

Rough cut .070 max

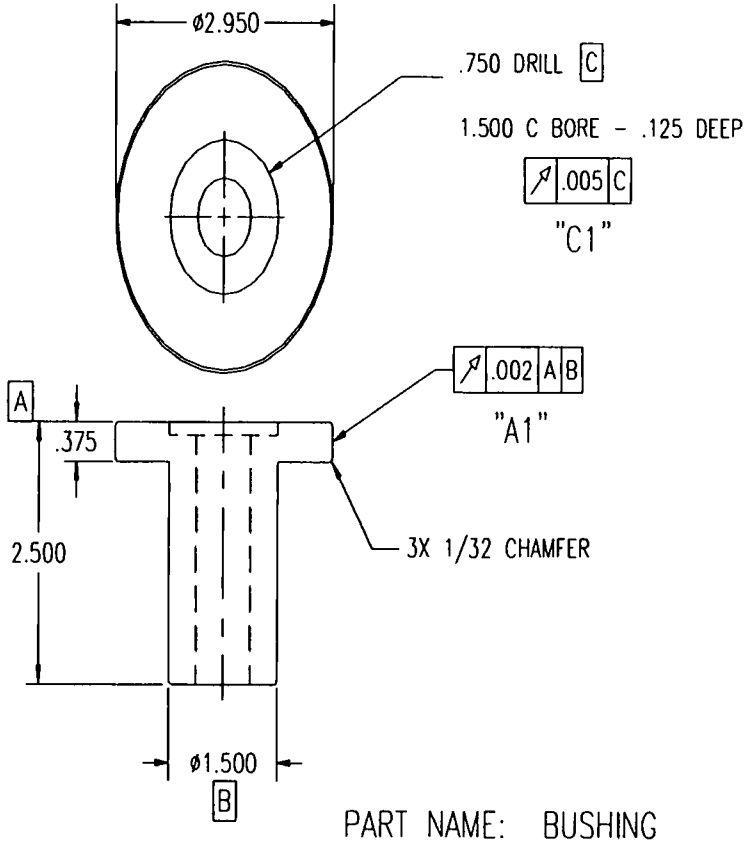

PART NAME: BUSHING

836

835

Bushing Inspection Sheet

Student Names: _____
_____
_____

Bushing Serial Number _____

Runout Tolerance: "A1"_____ Dim. _____

Runout Tolerance: "C1"_____ Dim. _____

Operation Sheet for Three-step Shaft

1. Start with stock 1.500 in diameter with sufficient length.
2. Tighten part in lathe chuck with the part tight against the back of the chuck. (The diameter is too large to fit through the chuck center so push the part in as far as possible.)
3.* Face to clean.
   Caution: The part will be sticking out of the chuck by almost 4.5 inches! You must take very small cuts (.015 max!).
4.* Center drill (#4 center drill) to 3\16 dia.
5.* Remove from lathe, turn part end for end, tighten part in lathe chuck. Face part to 5" dimension.
   Caution: The part will be sticking out of the chuck by almost 4.5 inches! You must take very small cuts (.015 max!).
6.* Center drill to 3\16 dia.
7. Support right side of part with live center.
8. ***Note : Measure 3.5 in. For first cut termination, rotate chuck by hand to insure no interference with tool bit!)***
9.* Take a trial cut. Measure part on both ends to check for taper.
10.* Turn 1.375 dia.
11. Check dimensions.
12.** Turn 1.250 diameter.
13. Check dimensions.
14.** Turn 1.125 diameter.
15. Check dimensions.

* Means calculate rpm for these steps.
** Means use same rpm for remaining steps

Tools Required

1. 1-2 OD. Mic.
2. 6 in. rule
3. #4 center drill
4. Lathe facing tool
5. Right hand lathe turning tool
6. Allen wrench set
7. Rags from crib

8. Coolant

Speed Rpm

Spindle speed is calculated from the formula:
RPM = cutting speed * (4) / dia of work
cutting speed = surface feet per min.
S.F.M. for aluminum = 600

Feed Rate

Rough turning .096 i.p.r. finish turning .006 i.p.r.
Depth of cut **Rough** cut .070 max

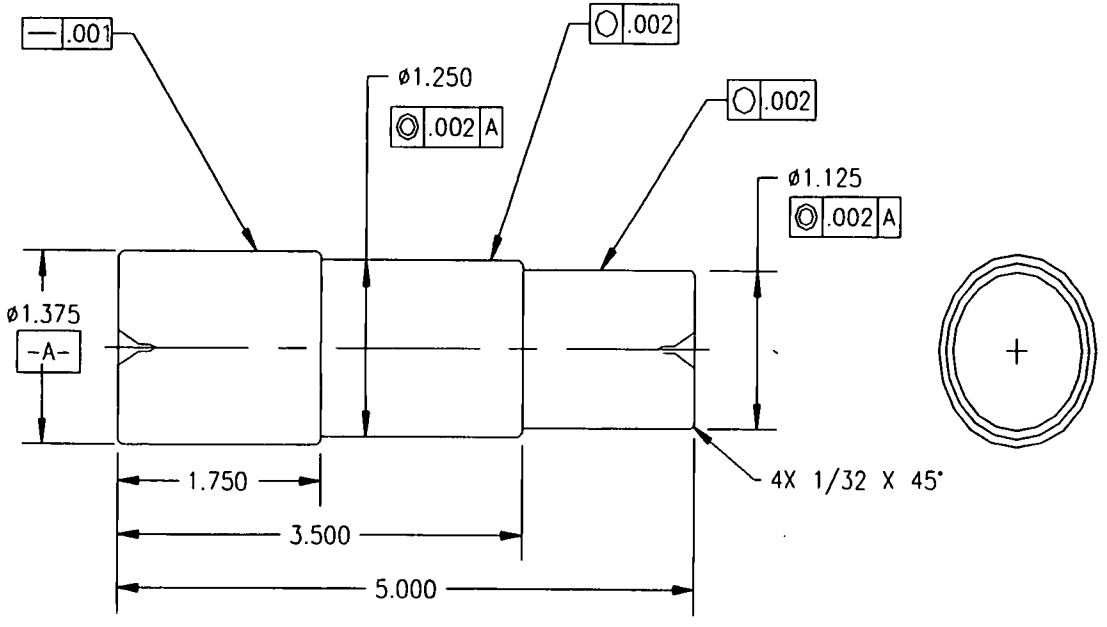

PART NAME: THREE-STEP SHAFT

NOTE: UOS ALL DIMENSIONS ARE
TO BE ±.005

801

800

Three-Step Shaft Inspection Sheet

Student Names: _____
_____
_____

Shaft Serial Number _____

1.375 Dia: Straightness Tolerance _____

1.250 Dia: Roundness Tolerance _____
Circularity Tolerance _____

1.125 Dia: Roundness Tolerance _____
Circularity Tolerance _____

Rules of Conduct

1. Absolutely no horseplay or practical joking will be tolerated.
2. Do not talk to anyone who is operating a machine.
3. Walk only in the designated traffic lanes.
4. Dress appropriately; at the absolute minimum, you must have:
   a. No loose clothing, including ties;
   b. Long hair properly stowed;
   c. No jewelry;
   d. Hard, closed-toe shoes;
   e. Eye protection (safety glasses); and,
   f. Ear protection (plugs or headset).
5. Follow all institutional safety rules.

LSR-C9-HO
Investigate Advanced Metrology Topics
Attachment 1: **MASTER** Handout

Objective(s):

Upon completion of this unit the student will be able to:

a. Discuss the purpose and applications of laser measurement;
b. Set up and use a laser measurement device;
c. Assess how ISO 9000 affects metrology; and,
d. Study the fundamentals of statistical process control (SPC).

Module Outline:

I. Investigate Advanced Metrology Topics
   A. Discuss the purpose and applications of laser measurement
   B. Set up and use a laser measurement device
   C. Assess how ISO 9000 affects metrology
   D. Study the fundamentals of statistical process control

Successful completion of this technical module will be based on the students' successful completion of the following components:

a. Demonstrate an understanding of the applications of laser measurement;
b. Set up and use a laser measurement device;
c. Discuss how ISO 9000 affects metrology; and,
d. Demonstrate an understanding of the fundamentals of statistical process control.

Rules of Conduct

1. Absolutely no horseplay or practical joking will be tolerated.
2. Do not talk to anyone who is operating a machine.
3. Walk only in the designated traffic lanes.
4. Dress appropriately; at the absolute minimum, you must have:
   a. No loose clothing, including ties;
   b. Long hair properly stowed;
   c. No jewelry;
   d. Hard, closed-toe shoes;
   e. Eye protection (safety glasses); and,
   f. Ear protection (plugs or headset).
5. Follow all institutional safety rules.

Laser Machinist .... apply the principles of electronics, lasers, optics, materials, engineering documentation, CAD/CAM, and systems integration to manufacture products following current industry and company standards.

Duties	Tasks												
A Practice Laser Safety	A-1 Discuss laser safety standards	A-2 Discuss basic laser principles	A-3 Discuss laser hazards	A-4 Discuss control measures									
B Apply Mathematical Concepts	B-1 Perform basic mathematical functions	B-2 Perform algebraic functions	B-3 Study exponents and right triangle geometry	B-4 Study elements of plane and solid geometry	B-5 Perform data evaluation and statistical analysis	B-6 Perform proportioning and interpolation	B-7 Perform basic trigonometric calculations	B-8 Investigate vectors and vector systems	B-9 Investigate the Cartesian Coordiante System				
C Perform Measurement and Inspection	C-1 Study basics of metrology	C-2 Select instruments used for measurement	C-3 Study datums and the three plane concept	C-4 Select gauging tools	C-5 Use CMM for location of features	C-6 Perform measurements for orientation tolerances	C-7 Perform measurment by optical comparison	C-8 Perform measurements for circularity, concentricity, runout, and straightness tolerances	C-9 Investigate advanced metrology topics				
D Troubleshoot Industrial Electronics and Control	D-1 Perform DC voltage, current, and power measurements	D-2 Perform AC voltage, current, and power measurements	D-3 Investigate digital logic systems	D-4 Investigate diode applications	D-5 Investigate transistors and thyristors	D-6 Investigate operational amplifiers	D-7 Investigate power supply circuits						
E Apply Concepts of Modern Optics	E-1 Study reflection and refraction at plane surfaces	E-2 Perform imaging with a single lens	E-3 Perform imaging with multiple lenses	E-4 Study F-stops and apertures	E-5 Use laser beam-expanding collimators	E-6 Study interference	E-7 Study diffraction	E-8 Study polarization	E-9 Investigate radiometry and photometry				
F Perform CNC Machining	F-1 Apply machine specific nomenclature and terminology	F-2 Investigate the Cartesian coordinate system as applied to a CNC mill or laser	F-3 Apply CNC programming language	F-4 Perform start up, tool changing, and ending of programs	F-5 Perform positioning and basic drilling	F-6 Create a sub-program	F-7 Perform contouring	F-8 Apply tool radius compensation	F-9 Perform program preparation	F-10 Apply special laser coding parameters			
G Investigate Industrial Laser Systems	G-1 Review characteristics of light	G-2 Investigate emission and absorption of light	G-3 Discuss optical cavities and laser modes	G-4 Discuss temporal characteristics of lasers	G-5 Investigate spatial characteristics of lasers	G-6 Discuss laser classifications and characteristics							
H Perform Computer-Aided Drafting (CAD)	H-1 Discuss and understand PC basics	H-2 Discuss CAD basics and file management	H-3 Use drawing settings	H-4 Perform basic editing commands	H-5 Create drawings with accuracy	H-8 Organize drawing information	H-7 Control the display of drawings	H-8 Use intermediate drawing commands	H-9 Perform intermediate editing commands	H-10 Create multi view drawings	H-11 Create sectioned drawings	H-12 Investigate basic dimensioning	H-13 Perform advanced dimensioning
	H-14 Use and manipulate blocks	H-15 Use blocks to automate the drawing process											
I Perform Laser Materials Processing	I-1 Review laser safety standards	I-2 Discuss lasers used for materials processing	I-3 Discuss laser optics and beam characteristics	I-4 Investigate absorption of laser energy	I-5 Use lasers for welding and surface treatment	I-6 Use lasers for material removal							
J Perform Computer-Aided Manufacturing (CAM)	J-1 Discuss and understand the basics of a PC based CAM system	J-2 Discuss basic CAM operations	J-3 Set up cutting tools	J-4 Create simple part profiles	J-5 Create and edit complex part profiles	J-6 Perform roughing, drilling, and counterboring	J-7 Advanced editing of part profiles	J-8 Edit tool paths	J-9 Use construction layers in SmartCAM	J-10 Perform user commands and machine events	J-11 Create families of parts	J-12 Perform CAD/CAM integration	J-13 Perform code generation

LSB PMS
040693

LSR-D1-HO

Perform DC Voltage, Current, and Power Measurements

Attachment 1: **MASTER** Handout

Objective(s):

Upon completion of this unit the student will be able to analyze DC circuits, including:

a. Identifying components, quantities, and units;
b. Determining resistance using color code;
c. Demonstrating an understanding of DC voltage and current;
d. Demonstrating an understanding of power and energy;
e. Analyzing series, parallel and series-parallel circuits;
f. Performing voltage, current, and power measurements; and,
g. Troubleshooting basic DC circuits.

Module Outline:

I. Perform DC Voltage, Current and Power Measurements
  A. Identify components, quantities, and units
    1. Discuss components and measuring instruments
    2. Discuss electrical and magnetic units
    3. Use Metric prefixes
    4. Perform metric conversions
  B. Determine resistance using color code
  C. Demonstrate an understanding of DC voltage and current.
    1. Calculate current, voltage, and resistance using Ohm's Law
  D. Demonstrate an understanding of power and energy
    1. Calculate power in a circuit
    2. Determine resistor power ratings
    3. Discuss basic power supplies
  E. Analyze series, parallel and series-parallel circuits
    1. Calculate voltage, current and power in a series circuit
    2. Calculate voltage, current and power in a parallel circuit
    3. Calculate voltage, current and power in a series-parallel circuit
  F. Perform voltage, current, and power measurements
    1. Measure voltage, current and power in a series circuit
    2. Measure voltage, current and power in a parallel circuit
    3. Measure voltage, current and power in a series-parallel circuit
    4. Discuss loading effects in a voltmeter
  G. Troubleshoot basic DC circuits
    1. Check for open circuits
    2. Check for short circuits

LSR-D1-LE
Perform DC Voltage, Current, and Power Measurements
Attachment 2: **MASTER** Laboratory Exercise

Successful completion of this technical module will be based on the students' successful completion of the following components:

I. Perform DC voltage, current and power measurements;
   - A. Identify components, quantities, and units;
     1. Discuss components and measuring instruments;
     2. Discuss electrical and magnetic units;
     3. Use Metric prefixes;
     4. Perform metric conversions;
   - B. Determine resistance using color code;
   - C. Demonstrate an understanding of DC voltage and current;
     1. Calculate current, voltage, and resistance using Ohm's Law;
   - D. Demonstrate an understanding of power and energy;
     1. Calculate power in a circuit;
     2. Determine resistor power ratings;
     3. Discuss basic power supplies;
   - E. Analyze series, parallel and series-parallel circuits;
     1. Calculate voltage, current and power in a series circuit;
     2. Calculate voltage, current and power in a parallel circuit;
     3. Calculate voltage, current and power in a series-parallel circuit;
   - F. Perform voltage, current, and power measurements;
     1. Measure voltage, current and power in a series circuit;
     2. Measure voltage, current and power in a parallel circuit;
     3. Measure voltage, current and power in a series-parallel circuit;
     4. Discuss loading effects in a voltmeter;
   - G. Perform troubleshooting of basic DC circuits;
     1. Check for open circuits;
     2. Check for short circuits; and,
   - H. Practice and demonstration of skills listed above.

LSR-D2-HO

Perform AC Voltage, Current, and Power Measurements

Attachment 1: MASTER Handout

Objective(s):

Upon completion of this unit the student will be able to analyze AC circuits, including:

a. Demonstrating an understanding of sinusoidal voltage and current;
b. Calculating and measuring RMS voltage and current;
c. Measuring AC voltage and current using an oscilloscope;
d. Discussing principles and applications of capacitors;
e. Discussing principles and applications of inductors;
f. Discussing principles and applications of transformers;
g. Troubleshooting RC, RL and RLC circuits; and,
h. Demonstrating and understanding polyphase systems.

Module Outline:

I. Perform AC Voltage, Current, and Power Measurements
- A. Demonstrate an understanding of sinusoidal voltage and current
- B. Demonstrate an understanding of RMS current and voltage
- C. Measure RMS current and voltage using a digital multimeter
- D. Measure voltage and current using an oscilloscope
- E. Discuss principles and applications of capacitors:
  1. Discuss the basic structure and characteristics of capacitors
  2. Discuss various types of capacitors
  3. Analyze series capacitors
  4. Analyze parallel capacitors
  5. Analyze capacitive DC switching circuits
  6. Analyze AC capacitive circuits
  7. Discuss capacitor applications in power supply filters
  8. Perform testing of capacitors
- F. Discuss principles and applications of inductors:
  1. Discuss the basic structure and characteristics of inductors
  2. Discuss various types of inductors
  3. Analyze series inductors
  4. Analyze parallel inductors
  5. Analyze inductive DC switching circuits
  6. Analyze AC inductive circuits
  7. Discuss inductor applications in power supply filters
  8. Perform testing of inductors
- G. Discuss principles and applications of transformers
  1. Describe how a transformer is constructed and how it operates

2. Discuss step-up/step-down transformers
3. Discuss transformer secondary loading
4. Discuss reflected loads in transformers
5. Explain how a transformer is used as an isolation device
6. Describe practical transformer characteristics
8. Describe center-tapped transformers
9. Describe multiple-winding transformers
10. Describe autotransformers
11. Discuss troubleshooting of transformers

H. Discuss of RC, RL and RLC circuits

I. Discuss polyphase systems
1. Discuss the advantages of polyphase in power applications
2. Analyze three-phase generator configurations
3. Analyze three-phase generators with three-phase loads
4. Discuss power measurements in three-phase systems

Successful completion of this technical module will be based on the students' successful completion of the following components:

I. Perform AC Voltage, current, and power measurements;
- A. Demonstrate an understanding of sinusoidal voltage and current;
- B. Demonstrate an understanding of RMS current and voltage;
- C. Measure RMS current and voltage using a digital multimeter;
- D. Measure voltage and current using an oscilloscope;
- E. Discuss principles and applications of capacitors;
  1. Discuss the basic structure and characteristics of capacitors;
  2. Discuss various types of capacitors;
  3. Analyze series capacitors;
  4. Analyze parallel capacitors;
  5. Analyze capacitive DC switching circuits;
  6. Analyze AC capacitive circuits;
  7. Discuss capacitor applications in power supply filters;
  8. Perform testing of capacitors;
- F. Discuss principles and applications of inductors;
  1. Discuss the basic structure and characteristics of inductors;
  2. Discuss various types of inductors;
  3. Analyze series inductors;
  4. Analyze parallel inductors;
  5. Analyze inductive DC switching circuits;
  6. Analyze AC inductive circuits;
  7. Discuss inductor applications in power supply filters;
  8. Perform testing of inductors;
- G. Discuss principles and applications of transformers;
  1. Describe how a transformer is constructed and how it operates;
  2. Discuss step-up/step-down transformers;
  3. Discuss transformer secondary loading;
  4. Discuss reflected loads in transformers;
  5. Explain how a transformer is used as an isolation device;
  6. Describe practical transformer characteristics;
  8. Describe center-tapped transformers;
  9. Describe multiple-winding transformers;
  10. Describe autotransformers;
  11. Discuss troubleshooting of transformers;
- H. Discuss RC, RL and RLC circuits;
- I. Discuss polyphase systems;
  1. Discuss the advantages of polyphase in power applications;

2. Analyze three-phase generator configurations;
3. Analyze three-phase generators with three-phase loads;
4. Discuss power measurements in three-phase systems; and,

J. Practice and demonstration of skills listed above.

LSR-D3-HO
Investigate Digital Logic Systems
Attachment 1: **MASTER** Handout

Objective(s):

Upon completion of this unit the student will be able to:

a. Demonstrate an understanding of digital and analog quantities;
b. Demonstrate an understanding of the binary number system;
c. Identify logic gates;
d. Demonstrate an understanding of Boolean expressions and truth tables;
e. Evaluate combinational logic circuits;
f. Discuss functions of combinational logic;
g. Discuss encoders/decoders and multiplexers;
h. Discuss flip-flops and related devices;
i. Discuss counters and shift registers;
j. Demonstrate an understanding of digital memory systems;
j. Demonstrate an understanding of system interfacing;
l. Discuss interfacing of logic families; and,
m. Troubleshoot digital logic systems.

Module Outline:

I. Demonstrate an Understanding of Digital and Analog Quantities
   A. Discuss positive and negative logic
   B. Discuss characteristics of pulse waveforms
   C. Discuss serial and parallel transfer
II. Demonstrate the Use of Digital Test Instruments
   A. Oscilloscope
   B. Logic analyzer
   C. Logic probe
   D. Logic clip
III. Demonstrate an Understanding of the Binary Number System
   A. Perform counting in binary
   B. Perform binary-to-decimal and decimal to binary conversion
   C. Discuss octal and hexadecimal number systems
IV. Identify Logic Gates
   A. The inverter
   B. The AND/NAND gate
   C. The OR/NOR gate
   D. The Exclusive OR/NOR gate
   E. Discuss TTL and CMOS integrated circuit logic families
V. Demonstrate an Understanding of Boolean Expressions and Truth Tables

VI. Test and Troubleshoot Combinational Logic Circuits
VII. Discuss Encoder/Decoders and Multiplexers
VIII. Discuss Flip-Flops and Related Devices
  A. Latches
  B. Edge triggered flip-flops
  C. Pulse-triggered flip-flops
  D. One-shots
  E. Astable multi vibrators and timers (555 timers)
IX. Discuss Counters and Shift Registers
X. Demonstrate an Understanding of Digital Memory Systems
XI. Demonstrate an Understanding of System Interfacing
  A. Digital-to-analog conversion
  B. Analog-to-digital conversion
  C. The General Purpose Interface Bus (GPIB)
  D. The RS-232 serial interface
XII. Discuss Interfacing of Logic Families
  A. TTL practical considerations
  B. CMOS practical considerations
  C. TTL-CMOS interfacing
  D. CMOS-TTL interfacing

LSR-D3-LE
Investigate Digital Logic Systems
Attachment 2: **MASTER** Laboratory Exercise

Successful completion of this technical module will be based on the students' successful completion of the following components:

I. Demonstrate an understanding of digital and analog quantities;
   a. Discuss positive and negative logic;
   b. Discuss characteristics of pulse waveforms;
   c. Discuss serial and parallel transfer;
II. Demonstrate the use of digital test instruments;
   a. Oscilloscope;
   b. Logic analyzer;
   c. Logic probe;
   d. Logic clip;
III. Demonstrate an understanding of the binary number system;
   a. Perform counting in binary;
   b. Perform binary-to-decimal and decimal to binary conversion;
   c. Discuss octal and hexadecimal number systems;
IV. Identify logic gates;
   a. The inverter;
   b. The AND/NAND gate;
   c. The OR/NOR gate;
   d. The Exclusive OR/NOR gate;
   e. Discuss TTL and CMOS integrated circuit logic families;
V. Demonstrate an understanding of boolean expressions and truth tables;
VI. Test and troubleshoot combinational logic circuits;
VII. Discuss encoder/decoders and multiplexers;
VIII. Discuss flip-flops and related devices;
   a. Latches;
   b. Edge triggered flip-flops;
   c. Pulse-triggered flip-flops;
   d. One-shots;
   e. Astable multi vibrators and timers (555 timers);
IX. Discuss counters and shift registers;
X. Demonstrate an understanding of digital memory systems;
XI. Demonstrate an understanding of system interfacing;
   a. Digital-to-analog conversion;
   b. Analog-to-digital conversion;
   c. The General Purpose Interface Bus (GPIB);
   d. The RS-232 serial interface;
XII. Discuss interfacing of logic families;
   a. TTL practical considerations;

b. CMOS practical considerations;
c. TTL-CMOS interfacing;
d. CMOS-TTL interfacing; and,

XIII. Practice and demonstration of skills listed above.

LSR-D4-HO
Investigate Diode Applications
Attachment 1: MASTER Handout

Objective(s):

Upon completion of this unit the student will be able to demonstrate an understanding of diodes and applications, and:

a. Discuss N-type and P-type semiconductors;
b. Discuss PN junctions;
c. Discuss diode characteristics;
d. Discuss diodes and applications;
e. Discuss half-wave rectifiers;
f. Discuss full-wave rectifiers;
g. Discuss rectifier filters;
h. Discuss diode clipping and clamping circuits;
i. Discuss zener diodes; and,
j. Discuss LED's and photodiodes.

Module Outline:

I. Demonstrate an Understanding Diodes and Applications
   A. Discuss N-type and P-type semiconductors
   B. Discuss PN junctions
   C. Discuss diode characteristics
   D. Discuss diodes and applications
   E. Discuss half-wave rectifiers
   F. Discuss full-wave rectifiers
   G. Discuss rectifier filters
   H. Discuss diode clipping and clamping circuits
   I. Discuss zener diodes
   J. Discuss LED's and photodiodes

Successful completion of this technical module will be based on the students' successful completion of the following components:

a. Demonstrate an Understanding Diodes and Applications;
   (1) Discuss N-type and P-type semiconductors;
   (2) Discuss PN junctions;
   (3) Discuss diode characteristics;
   (4) Discuss diodes and applications;
   (5) Discuss half-wave rectifiers;
   (6) Discuss full-wave rectifiers;
   (7) Discuss rectifier filters;
   (8) Discuss diode clipping and clamping circuits;
   (9) Discuss zener diodes;
   (10) Discuss LED's and photodiodes; and,
   (11) Practice and demonstration of skills listed above.

LSR-D5-HO
Investigate Transistors and Thyristors
Attachment 1: **MASTER** Handout

Objective(s):

Upon completion of this unit the student will be able to demonstrate an understanding of transistors and thyristors, and:

a. Discuss bipolar junction transistors (BJT's);
b. Discuss field effect transistors (FET's);
c. Discuss metal oxide semiconductors (MOSFET's);
d. Discuss unijunction transistors (UJT's);
e. Discuss transistor biasing;
f. Discuss transistors in switching applications;
g. Discuss thyristors; and,
h. Troubleshoot transistor circuits.

Module Outline:

I. Demonstrate an Understanding of Transistors and Thyristors
   A. Discuss bipolar junction transistors (BJT's)
   B. Discuss field effect transistors (FET's)
   C. Discuss metal oxide semiconductors (MOSFET's)
   D. Discuss unijunction transistors (UJT's)
   E. Discuss transistor biasing
   F. Discuss transistors in switching applications
   G. Discuss thyristors
   H. Troubleshoot transistor circuits
   I. Practice and demonstration of skills listed above

LSR-D5-LE
Investigate Transistors and Thyristors
Attachment 2: **MASTER** Laboratory Exercise

Successful completion of this technical module will be based on the students' successful completion of the following components:

a. Demonstrate an understanding of transistors ands thyristors;
b. Discuss bipolar junction transistors (BJT's);
c. Discuss field effect transistors (FET's);
d. Discuss metal oxide semiconductors (MOSFET's);
e. Discuss unijunction transistors (UJT's);
f. Discuss transistor biasing;
g. Discuss transistors in switching applications;
h. Discuss thyristors;
i. Troubleshoot transistor circuits; and,
j. Practice and demonstration of skills listed above.

LSR-D6-HO
Investigate Operational Amplifiers
Attachment 1: **MASTER** Handout

Objective(s):

Upon completion of this unit the student will be able to demonstrate an understanding of operational amplifiers, including:

a. Basic op-amp operation and characteristics;
b. Negative feedback;
c. Positive feedback;
d. Open and closed loop response;
e. Offset voltage compensation;
f. Comparators;
g. Summing amplifiers;
h. Instrumentation amplifiers;
i. Integrators and differentiator;
j. Constant current source;
k. Current-to-voltage converter;
l. Voltage-to-current converter;
m. Peak detector;
n. Analog to digital converters;
o. Digital to analog converters;
p. 555 timer circuits; and,
q. Troubleshooting op-amp circuits.

Module Outline:

I. Discuss Principles and Applications of Operational Amplifiers
   A. Basic op-amp operation and characteristics
   B. Negative feedback
   C. Positive feedback
   D. Open and closed loop response
   E. Offset voltage compensation
   F. Comparators
   G. Summing amplifiers
   H. Instrumentation amplifiers
   I. Integrators and differentiator
   J. Constant current source
   K. Current-to-voltage converter
   L. Voltage-to-current converter
   M. Peak detector
   N. Analog to digital converters
   O. Digital to analog converters

P. 555 timer circuits
Q. Troubleshooting op-amp circuits

LSR-D6-LE
Investigate Operational Amplifiers
Attachment 2: **MASTER** Laboratory Exercise

Successful completion of this technical module will be based on the students' successful completion of the following components:

a. Demonstrate an understanding of operational amplifiers;
b. Basic op-amp operation and characteristics;
c. Negative feedback;
d. Positive feedback;
e. Open and closed loop response;
f. Offset voltage compensation;
g. Comparators;
h. Summing amplifiers;
i. Instrumentation amplifiers;
j. Integrators and differentiator;
k. Constant current source;
l. Current-to-voltage converter;
m. Voltage-to-current converter;
n. Peak detector;
o. Analog to digital converters;
p. Digital to analog converters;
q. 555 timer circuits;
r. Troubleshooting op-amp circuits; and,
s. Practice and demonstration of skills listed above.

LSR-D7-HO
Investigate Power Supply Circuits
Attachment 1: **MASTER** Handout

Objective(s):

Upon completion of this unit the student will be able to demonstrate an understanding of power supply circuits, including:

a. Voltage regulation;
b. Basic series regulators;
c. Basic shunt regulators;
d. Basic switching regulators;
e. Integrated circuit voltage regulators;
f. Applications of IC regulators; and,
g. Troubleshooting power supply circuits.

Module Outline:

I. Discuss the Basic Operation of Power Supply Circuits
   A. Voltage regulation
   B. Basic series regulators
   C. Basic shunt regulators
   D. Basic switching regulators
   E. Integrated circuit voltage regulators
   F. Applications of IC regulators
   G. Troubleshooting power supply circuits
   H. Practice and demonstration of the skills listed above

Successful completion of this technical module will be based on the students' successful completion of the following components:

a. Demonstrate an understanding of power supply circuits;
b. Voltage regulation;
c. Basic series regulators;
d. Basic shunt regulators;
e. Basic switching regulators;
f. Integrated circuit voltage regulators;
g. Applications of IC regulators;
h. Troubleshooting power supply circuits; and,
i. Practice and demonstration of the skills listed above.

Laser Machinist .... apply the principles of electronics, lasers, optics, materials, engineering documentation, CAD/CAM, and systems integration to manufacture products following current industry and company standards.

Duties	Tasks												
A Practice Laser Safety	A-1 Discuss laser safety standards	A-2 Discuss basic laser principles	A-3 Discuss laser hazards	A-4 Discuss control measures									
B Apply Mathematical Concepts	B-1 Perform basic mathematical functions	B-2 Perform algebraic functions	B-3 Study exponents and right triangle geometry	B-4 Study elements of plane and solid geometry	B-5 Perform data evaluation and statistical analysis	B-6 Perform proportioning and interpolation	B-7 Perform basic trigonometric calculations	B-8 Investigate vectors and vector systems	B-9 Investigate the Cartesian Coordiante System				
C Perform Measurement and Inspection	C-1 Study basics of metrology	C-2 Select instruments used for measurement	C-3 Study datums and the three plane concept	C-4 Select gauging tools	C-5 Use CMM for location of features	C-6 Perform measurements for orientation tolerances	C-7 Perform measurment by optical comparison	C-8 Perform measurements for circularity, concentricity, runout, and straightness tolerances	C-9 Investigate advanced metrology topics				
D Troubleshoot Industrial Electronics and Control	D-1 Perform DC voltage, current, and power measurements	D-2 Perform AC voltage, current, and power measurements	D-3 Investigate digital logic systems	D-4 Investigate diode applications	D-5 Investigate transistors and thyristors	D-6 Investigate operational amplifiers	D-7 Investigate power supply circuits						
E Apply Concepts of Modern Optics	E-1 Study reflection and refraction at plane surfaces	E-2 Perform imaging with a single lens	E-3 Perform imaging with multiple lenses	E-4 Study F-stops and apertures	E-5 Use laser beam-expanding collimators	E-6 Study interference	E-7 Study diffraction	E-8 Study polarization	E-9 Investigate radiometry and photometry				
F Perform CNC Machining	F-1 Apply machine specific nomenclature and terminology	F-2 Investigate the Cartesian coordinate system as applied to a CNC mill or laser	F-3 Apply CNC programming language	F-4 Perform start up, tool changing, and ending of programs	F-5 Perform positioning and basic drilling	F-6 Create a sub-program	F-7 Perform contouring	F-8 Apply tool radius compensation	F-9 Perform program preparation	F-10 Apply special laser coding parameters			
G Investigate Industrial Laser Systems	G-1 Review characteristics of light	G-2 Investigate emission and absorption of light	G-3 Discuss optical cavities and laser modes	G-4 Discuss temporal characteristics of lasers	G-5 Investigate spatial characteristics of lasers	G-6 Discuss laser classifications and characteristics							
H Perform Computer-Aided Drafting (CAD)	H-1 Discuss and understand PC basics	H-2 Discuss CAD basics and file management	H-3 Use drawing settings	H-4 Perform basic editing commands	H-5 Create drawings with accuracy	H-6 Organize drawing information	H-7 Control the display of drawings	H-8 Use intermediate drawing commands	H-9 Perform intermediate editing commands	H-10 Create multi view drawings	H-11 Create sectioned drawings	H-12 Investigate basic dimensioning	H-13 Perform advanced dimensioning
	H-14 Use and manipulate blocks	H-15 Use blocks to automate the drawing process											
I Perform Laser Materials Processing	I-1 Review laser safety standards	I-2 Discuss lasers used for materials processing	I-3 Discuss laser optics and beam characteristics	I-4 Investigate absorption of laser energy	I-5 Use lasers for welding and surface treatment	I-6 Use lasers for material removal							
J Perform Computer-Aided Manufacturing (CAM)	J-1 Discuss and understand the basics of a PC based CAM system	J-2 Discuss basic CAM operations	J-3 Set up cutting tools	J-4 Create simple part profiles	J-5 Create and edit complex part profiles	J-6 Perform roughing, drilling, and counterboring	J-7 Advanced editing of part profiles	J-8 Edit tool paths	J-9 Use construction layers in SmartCAM	J-10 Perform user commands and machine events	J-11 Create families of parts	J-12 Perform CAD/CAM integration	J-13 Perform code generation

LS2 PM 8
040698

Duty E

BEST COPY AVAILABLE

913

LSR-E1-HO

Study Reflection and Refraction at Plane Surfaces

Attachment 1: **MASTER** Handout

Objective(s):

Upon completion of this unit the student will be able to:

a. Use Snell's Law to demonstrate reflection from a plane surface;
b. Use Snell's Law to demonstrate refraction at a plane surface; and,
c. Use Snell's Law to calculate index of refraction.

Module Outline:

I. Study Reflection and Refraction at Plane Surfaces
   A. Discuss and demonstrate the law of reflection
   B. Discuss and demonstrate the law of refraction
   C. Calculate the refraction and for a variety of materials using Snell's Law
   D. Calculate the index of refraction for a variety of materials using Snell's Law
   E. Discuss diffuse and specular reflections
   F. Practice and demonstration of skills listed above

LSR-E1-LE
Study Reflection and Refraction at Plane Surfaces
Attachment 2: **MASTER** Laboratory Exercise

Successful completion of this technical module will be based on the students' successful completion of the following components:

1. Discuss and demonstrate the law of reflection;
2. Discuss and demonstrate the law of refraction;
3. Calculate the refraction and for a variety of materials using Snell's Law;
4. Calculate the index of refraction for a variety of materials using Snell's Law;
5. Discuss diffuse and specular reflections; and,
6. Practice and demonstration of skills listed above.

LSR-E1-LW
Study Reflection and Refraction at Plane Surfaces
Attachment 3: MASTER Laboratory Worksheet

Refraction at Plane Surfaces

Objective

The purpose of this experiment is to familiarize the student with the concept of light refraction at an optical interface boundary. Light can be reflected or transmitted at a boundary separating two optical media, such as an interface between air and a glass plate. When the light isn't incident normal to the interface, the transmitted ray is bent either toward or away from the normal. This phenomenon is known as *refraction*.

Materials

Low-power HeNe laser
Protractor
Semicircular plate of Lucite
Graduated circular rotating mount

Procedure

1. Set up the experimental apparatus as shown in Figure 1.

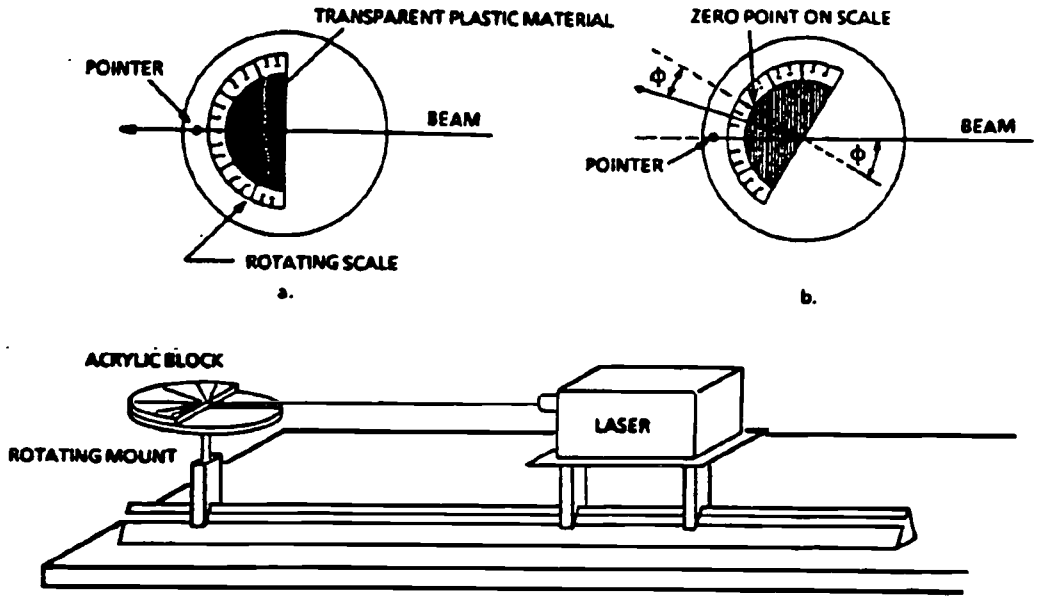

Figure 1

Snell's Law:

$$n \sin \Phi = n' \sin \Phi'$$

2. Use a graduated circular rotating mount, a low power HeNe laser, and a piece of smoked Lucite or any other transparent material that will give a visual track of the laser beam passing through it. Align the apparatus so the beam of the laser enters the material on the flat side and hits the pointer at the point marked zero on the far side from the laser. Rotate the table in steps of 10° (as tabulated in the column marked "Φ" in Data Table 1) until an angle of approximately 90° is reached. At each of these 10° settings, record the angle that the refracted ray makes with the "0°" point on the graduated scale.

3. When you have these data, fill in the rest of Data Table 1 for n sin Φ, assuming n = 1, and for n′ sin Φ′, assuming n′ = 1.5. Compare the values to verify that *n sin Φ* is experimentally equal to *n′ sin Φ′* for each angle of incidence.

4. Plot the values of n sin Φ versus n′ sin Φ′, tabulated in Data Table 1. Explain any differences between this curve and the expected result indicated by a straight line at 45° on an equi-scaled graph.

Part II

1. Determine the index of refraction of a clear piece of plastic by measuring the incident angle Φ and the refracted angle, Φ′ as shown in Figure 2.

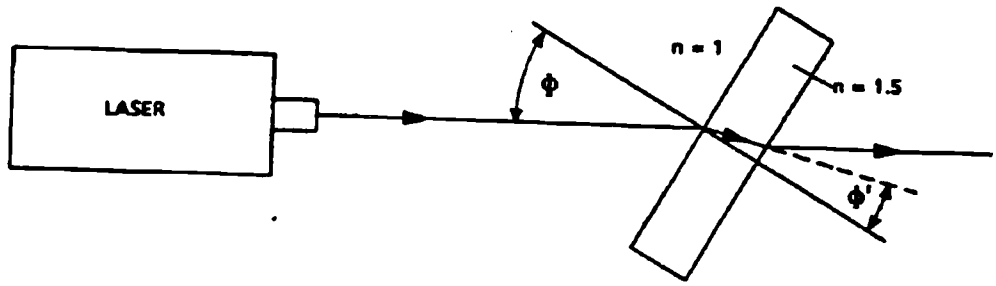

Figure 2

2. With an incident angle of approximately 50°, measure both the incident angle Φ and the refracted angle Φ′. Record in Data Table 2. When you've experimentally determined Φ and Φ′, calculate sin Φ and sin Φ′. Record in Data Table 2.

3. Given the index of refraction of air: n = 1, Use Snell's law and the data in Data Table 2, calculate the index of refraction of the plastic n′. Compare your answer with the number, n′ = 1.49. This is approximately the index of refraction for most commercially available Lucite or plastic.

4. Using the values of Φ and Φ',and the thickness t of the Lucite or plastic block, compute the displacement, d, of the laser beam in Figure 2. from using the equation

$$d = t\sin\Phi_1\left[1 - \frac{\cos\Phi_1}{\sqrt{n^2 - \sin^2\Phi_1}}\right]$$

5. Compare this calculation with the displacement measured by observing the shift in beam position with and without the Lucite or plastic block inserted in the beam.

Data Table 1.

Φ	Φ'	n = 1	n' = 1.5	n sin Φ	n' sin Φ'
0°					
10°					
20°					
30°					
40°					
50°					
60°					
70°					
80°					
90°					

Data Table 2.

Φ	Φ'	sin Φ	sin Φ'	n'_{cal}	n' = 1.5	t_{meas}	d_{cal}	d_{meas}

BEST COPY AVAILABLE

Rules of Conduct

Students must behave in a professional and responsible manner, observing all laser safety rules as outlined in ANSI-Z136.1, *Safe Use of Lasers*.

LSR-E2-HO
Perform Imaging With a Single Lens
Attachment 1: **MASTER** Handout

Objective(s):

Upon completion of this unit the student will be able to:

a. Determine focal points and focal lengths in positive thin lenses;
b. Demonstrate image formation with a positive thin lens;
c. Determine focal points and focal lengths in negative thin lenses; and,
d. Demonstrate image formation with a negative thin lens.

Module Outline:

I. Discuss and Demonstrate Imaging with a Single Lens
   A. Types of thin lenses (i.e., biconvex, plano-convex, and positive meniscus)
   B. Determination of focal points and focal lengths
   C. The Lensmaker's equation
   D. Focal planes
   E. Geometric ray tracing
   F. Thin lens equation and magnification
   G. Practice and demonstration of skills listed above

Successful completion of this technical module will be based on the students' successful completion of the following components:

1. Identify types of thin lenses (i.e., biconvex, plano-convex, and positive meniscus);
2. Determination of focal points and focal lengths;
3. Use the Lensmaker's equation;
4. Determine focal planes;
5. Perform geometric ray tracing;
6. Apply the thin lens equation and calculate magnification; and,
7. Practice and demonstration of skills listed above.

Rules of Conduct

Students must behave in a professional and responsible manner, observing all laser safety rules as outlined in ANSI-Z136.1, *Safe Use of Lasers*.

LSR-E3-HO
Perform Imaging With Multiple Lenses
Attachment 1: **MASTER** Handout

Objective(s):

Upon completion of this unit the student will be able to:

a. Perform imaging using two converging lenses; and,
b. Perform imaging using a converging and diverging lens.

Module Outline:

I. Discuss and Demonstrate Imaging with Multiple Lenses
   A. Ray tracing with multiple lenses
   B. Analysis of dual-lens systems using the thin lens formula
   C. Power of a thin lens
   D. Practice and demonstration of skills listed above.

ERIC

LSR-E3-LE
Perform Imaging With Multiple Lenses
Attachment 2: **MASTER** Laboratory Exercise

Successful completion of this technical module will be based on the students' successful completion of the following components:

1. Determine analytically, graphically, and experimentally the primary and secondary focal points of a lens;
2. Determine analytically, graphically, and experimentally the size and location of the image produced by a dual-lens system consisting of two converging lenses;
3. Determine analytically, graphically, and experimentally the size and location of the image produced by a dual-lens system consisting of one converging lens and one diverging lens;
4. Given the object distance and height for an optical system of two lenses of known focal length and placement, determine the following:
   a. Position and size of the final image;
   b. Lateral magnification, using both mathematical and graphical ray tracing methods;
5. Given a system of three lenses of known focal length and placement, determine the position of the image; and,
6. Practice and demonstration of skills listed above.

Imaging With Multiple Lenses

Objective

Complicated optical systems are often comprised of a series of individual lenses. An understanding of how single lenses can be combined into multiple lens systems for generating images is critical to the understanding of more complex optical systems. In this lab, the student will learn how to locate the primary and secondary focal lengths of a lens and the position of the image using graphical techniques.

Materials

Low-power HeNe laser
Ruler
Two large-diameter convex lenses and one large-diameter concave lens
Large piece of white paper
Wooden blocks, aluminum strips to form stops

Procedure

Before continuing, it might be helpful to point out that you could study a large number of possible dual-lens combinations. For simplicity, and for the sake of convenience, we suggest that the lenses chosen for this procedure have focal lengths of between 10 and 20 cm and that object distances be no greater than two times the focal length. We also suggest that the lenses be placed approximately one-half of a focal length apart. In the following procedures, the lenses have been chosen to that their focal lengths are +10 cm for the converging lenses and -10 cm for the divergent lenses. In both cases, the lenses are placed 5 cm apart and the object distance s_1 is chosen to be 20 cm. Likewise, the object height y_1 is arbitrarily chosen to be 2 cm.

Two Converging Lenses

1. Before you determine the imaging characteristics of a dual-lens system, you must determine the focal lengths of each lens. If the lenses used here are the same as those used in the previous module, you can omit this step. If different lenses are to be used, determine the primary and secondary focal lengths graphically, mathematically, and experimentally as outlined in the previous module. Record all data in the appropriate columns in Data Tables 1 and 2.

2. On a large piece of paper, draw a long optical axis and two lines perpendicular to this axis located 5 cm apart. Place the thin lens sections over these lines and trace their outlines. Record the primary and secondary focal points of both

lenses on the optical axis. At a distance 20 cm to the left of the lens L_1, draw a vertical arrow whose height is 2 cm. Label this arrow y_1. The figure should look similar to the one in Figure 1.

Figure 1

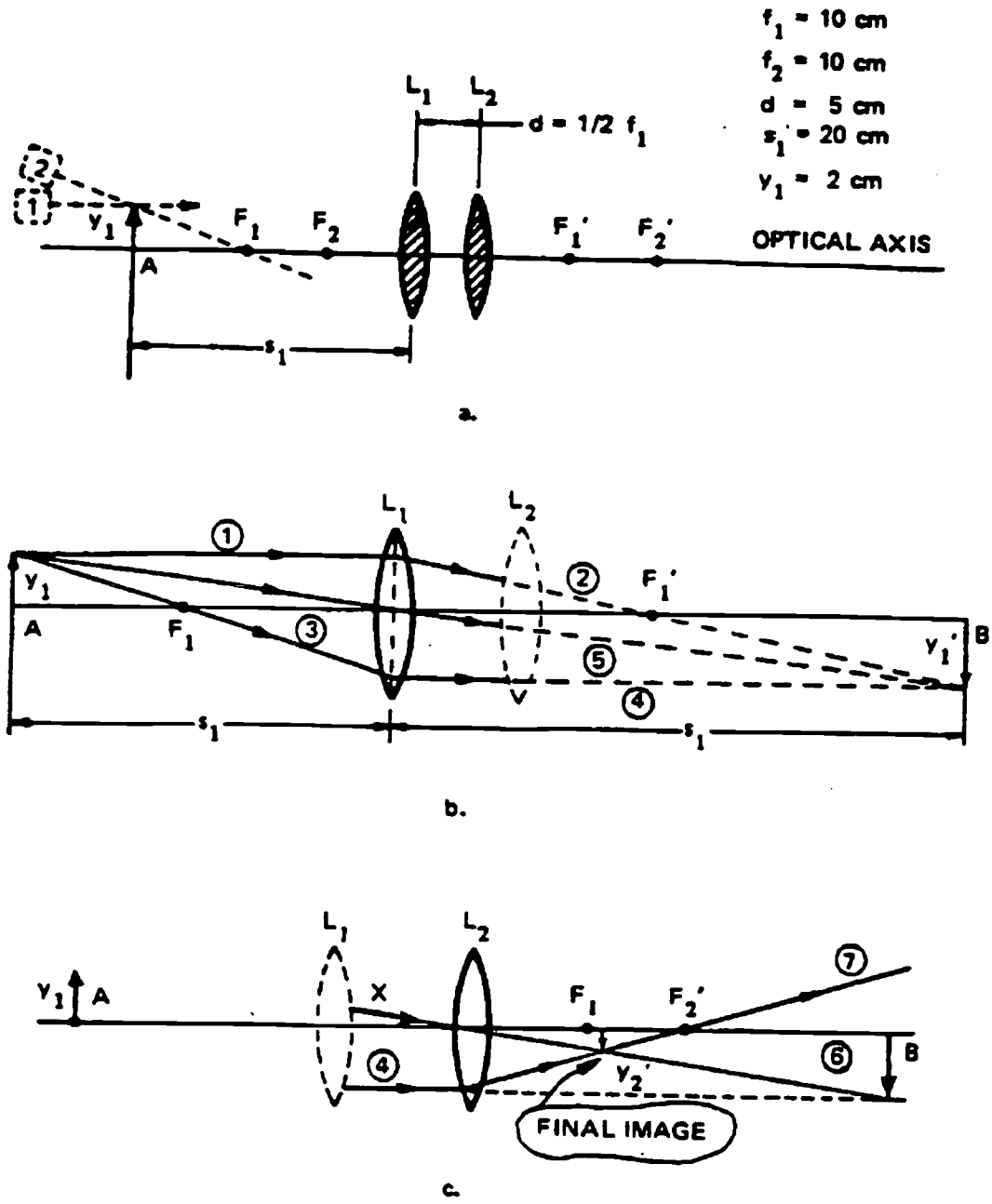

3. After you've made a suitable scale drawing, graphically ray-trace this dual-lens system and determine the final image location and size. Record these data in the appropriate columns in Data Table 1.

4. When you've determined the image location and size, place it on a laboratory table, place lenses L_1 and L_2 over their outlines

5. Place the laser in position 1 (see Figure 1a) so that the beam of the laser passes directly over the tip of y_1 and is parallel to the optical axis. Trace this ray on the paper through the entire lens system.

6. Place the laser in position 2 so that the beam of the laser passes directly over the tip of y_1 and through the primary focal point F_1 of lens 1. Trace this ray through the entire system.

7. Note the place where these two rays cross. Draw an arrow form this point to the optical axis. This is the image produced by this optical system of the object y_1. Record the image location and size in the appropriate columns of Data Table 1.

8. Using the thin-lens formula:

$$\frac{1}{f}=\frac{1}{s_1}+\frac{1}{s_{-1}}$$

where f = focal length
s_1 = object distance
s'_1 = image distance

determine the final image size and locations mathematically. Record these data in the appropriate columns of Data Table 1.

A Converging Lens and a Diverging Lens

1. As before, you must determine the primary and secondary focal lengths of the lenses to be used and record them in the appropriate columns of Data Table 2. If these lenses are the same as those used in the previous module, you can omit this step.

2. On a large piece of paper, draw an optical axis and two lines 5 cm apart, perpendicular to the optical axis. Label these lines 1 and 2. Trace the sections of lenses L_1 and L_2 on the perpendicular lines as shown in Figure 2. Indicate the primary and secondary focal points of both lenses on the optical axis. Draw an object 20 cm to the left of lens L_1, 2 cm high. Label this object y_1.

3. Graphically ray-trace this dual lens system. Record the resulting image location and size in the appropriate columns of Data Table 2.

4. When you have the graphical ray-tracing results, place the lenses over their outlines.

5. Place the laser in position 1 (see Figure 2) so that the beam of the laser passes over the tip of arrow y_1 and is parallel to the optical axis. Trace this ray through the entire system on the paper.

6. Place the laser in position 2 so that the beam of the laser passes directly over the tip of arrow y_1 and through the primary focal point of lens L_1. Trace this ray through the entire lens system on the paper.

7. Note the point where these two rays cross or appear to have crossed. Draw a line from this cross section to the optical axis. The point of intersection of these two lines determines the image of y_1. Record the location of this image and its size in the appropriate columns of Data Table 2.

8. Using the thin-lens formula, determine the final image size and location. Record the data in Data Table 2.

Data Table 1. Two Converging Lenses

Method	f1	f2	d cm	s_1 cm	s'_1 cm	s_2 cm	s'_2 cm	y_1 cm	y'_1 cm	y'_2 cm
Graphical										
Mathematical										
Experimental										

Data Table 2. A Converging Lens and a Diverging Lens

Method	f1	f2	d cm	s_1 cm	s'_1 cm	s_2 cm	s'_2 cm	y_1 cm	y'_1 cm	y'_2 cm
Graphical										
Mathematical										
Experimental										

BEST COPY AVAILABLE

Rules of Conduct

Students must behave in a professional and responsible manner, observing all laser safety rules as outlined in ANSI-Z136.1, *Safe Use of Lasers*.

LSR-E4-HO
Study F-Stops and Apertures
Attachment 1: **MASTER** Handout

Objective(s):

Upon completion of this unit the student will be able to:

a. Determine field stops and aperture stops; and,
b. Determine entrance and exit pupils.

Module Outline:

I. Discuss and Demonstrate Field-stops and Apertures
   A. Determine aperture stops
   B. Determine field stops
   C. Analyze chief rays and marginal rays
   D. Determine entrance and exit windows
   E. Practice and demonstration of skills listed above
II. Determine Entrance and Exit Pupils
   A. Determine entrance pupils
   B. Determine exit pupils
   C. Practice and demonstration of skills listed above

LSR-E4-LE
Study F-Stops and Apertures
Attachment 2: **MASTER** Laboratory Exercise

Successful completion of this technical module will be based on the students' successful completion of the following:

1. Define and label field stops and aperture stops on a diagram;
2. Define entrance and exit pupils on a diagram;
3. Determine analytically and graphically the entrance and exit pupils of a lens with a front stop and a lens with a rear stop;
4. Define and illustrate the concept of a chief ray;
5. Determine analytically and graphically the exit pupil, entrance pupil, and aperture stop of for two lenses with a stop placed between them; and,
6. Verify, experimentally, the results obtained above for the system of two lenses with an intermediate stop.

Rules of Conduct

Students must behave in a professional and responsible manner, observing all laser safety rules as outlined in ANSI-Z136.1, *Safe Use of Lasers.*

LSR-E5-HO
Use Laser Beam-Expanding Collimators
Attachment 1: MASTER Handout

Objective(s):

Upon completion of this unit the student will be able to:

a. Set-up and demonstrate a simple Keplerian laser beam expander;
b. Set-up and demonstrate Galilean laser beam expander; and,
c. Measure expanding power of each type.

Module Outline:

I. Discuss and Demonstrate Laser Beam Expander-Collimators
   A. Describe the set-up of a Keplerian expander-collimator
   B. Describe the set-up of a Galilean expander-collimator
   C. Describe the differences between the two expander-collimators
   D. Determine the expanding power of each type of collimator
   E. Practice and demonstration of skills listed above

LSR-E5-LE
Use Laser Beam-Expanding Collimators
Attachment 2: **MASTER** Laboratory Exercise

Successful completion of this technical module will be based on the students' successful completion of the following components:

1. Describe and set-up the two basic types of laser beam expander-collimators;
2. Describe the uses of each;
3. Determine the beam expanding power of each type; and,
4. Practice and demonstration of skills listed above.

Rules of Conduct

Students must behave in a professional and responsible manner, observing all laser safety rules as outlined in ANSI-Z136.1, *Safe Use of Lasers*.

LSR-E6-HO
Study Interference
Attachment 1: **MASTER** Handout

Objective(s):

Upon completion of this unit the student will be able to:

a. Demonstrate Young's Double Slit Interference;
b. Understand thin film interference and applications;
c. Determine optical surface flatness by interference; and,
d. Set-up and use a Michelson Interferometer.

Module Outline:

I. Discuss and Demonstrate Interference
   A. Discuss the superposition of waves
   B. Demonstrate interference using Young's double-slit experiment
   C. Discuss thin film interference and applications
   D. Demonstrate interference using the Michelson interferometer
   E. Use the Michelson interferometer to measure coherence length of a laser
   F. Use interference to determine surface flatness
   G. Practice and demonstration of skills listed above

LSR-E6-LE
Study Interference
Attachment 2: **MASTER** Laboratory Exercise

Successful completion of this technical module will be based on the students' successful completion of the following components:

1. Demonstrate an understanding of superposition of waves by identifying regions of constructive and destructive interference;
2. Use Young's double slit experiment to determine wavelength of light;
3. Demonstrate an understanding of interference by describing how thin films are used as antireflection coatings on optical components;
4. Demonstrate how to use the Michelson interferometer to measure the coherence length of a laser;
5. Determine surface flatness of an optical flat using interference; and,
6. Practice and demonstration of skills listed above.

Rules of Conduct

Students must behave in a professional and responsible manner, observing all laser safety rules as outlined in ANSI-Z136.1, *Safe Use of Lasers*.

LSR-E7-HO
Study Diffraction
Attachment 1: **MASTER** Handout

Objective(s):

Upon completion of this unit the student will be able to:

a. Demonstrate and explain Fraunhofer (far field) diffraction;
b. Demonstrate and explain Fresnel (near field) diffraction;
c. Apply Rayleigh's Criterion to determine the limit of resolution of an optical instrument;
d. Measure beam divergence and spot size; and,
e. Use diffraction gratings.

Module Outline:

I. Discuss and Demonstrate Diffraction
   A. Discuss the differences between an image formed in accordance with geometric optics as opposed to that formed in taking diffraction into consideration
   B. Discuss Huygens-Fresnel diffraction theory
   C. Determine the conditions (distance) for Fresnel (near-field) and Fraunhofer diffraction
   D. Demonstrate the far-field diffraction patterns for several common apertures including a narrow slit, a double slit, a diffraction grating, a rectangular aperture, and a circular aperture
   E. Discuss Rayleigh's Criterion and calculate the resolving power of a lens
   F. Discuss diffraction-limited optics
   G. Explain far-field diffraction of a laser beam
   H Calculate the far-field divergence and spot size of a laser beam
   I. Practice and demonstration of skills listed above

LSR-E7-LE
Study Diffraction
Attachment 2: **MASTER** Laboratory Exercise

Successful completion of this technical module will be based on the students' successful completion of the following components:

1. Explain the meaning of diffraction and give examples;
2. Explain the relationship between wavelength, aperture size, and predict their effect on the diffraction pattern;
3. Distinguish between Fraunhofer and Fresnel diffraction and the conditions for each;
4. Determine qualitatively and quantitatively the far-field diffraction patterns formed by a single slit, two slits, a rectangular aperture, and a circular aperture;
5. Use Rayleigh's Criterion to calculate the resolving power of a lens;
6. Discuss diffraction-limited optics;
7. Calculate the divergence and spot size of a laser beam; and,
8. Practice and demonstration of skills listed above.

Rules of Conduct

Students must behave in a professional and responsible manner, observing all laser safety rules as outlined in ANSI-Z136.1, *Safe Use of Lasers*.

LSR-E8-HO
Study Polarization
Attachment 1: **MASTER** Handout

Objective(s):

Upon completion of this unit the student will be able to:

a. Generate linearly polarized light;
b. Analyze light of unknown polarization;
c. Study the effect of birefringent materials on polarized light; and,
d. Use wave plates/retarders to generate elliptically and circularly polarized light.

Module Outline:

I. Discuss and Demonstrate Polarization
   A. Linear polarized light
   B. Circularly polarized light
   C. Elliptically polarized light
   D. Production of polarized light by reflection
   E. Production of polarized light by absorption
   F. Production of polarized light by refraction through birefringent crystals
   G. Malus' Law
   H. Wave plates/retarders
   I. Brewster windows
   J. Practice and demonstration of skills listed above

LSR-E8-LE
Study Polarization
Attachment 2: **MASTER** Laboratory Exercise

Successful completion of this technical module will be based on the students' successful completion of the following components:

1. Understand the difference between natural and polarized light;
2. Discuss and demonstrate the differences between linear, circular, and elliptically polarized light;
3. Discuss the production of polarized light by reflection, absorption, and by refraction through birefringent crystals;
4. Demonstrate the use of 1/4-wave plates for the generation of circularly and elliptically polarized light;
5. Discuss and demonstrate the use of Brewster Windows for producing polarized light in a laser cavity; and,
6. Practice and demonstration of skills listed above.

Rules of Conduct

Students must behave in a professional and responsible manner, observing all laser safety rules as outlined in ANSI-Z136.1, *Safe Use of Lasers*.

LSR-E9-HO
Investigate Radiometry and Photometry
Attachment 1: **MASTER** Handout

Objective(s):

Upon completion of this unit the student will be able to:

a. Perform optical power measurements;
b. Perform irradiance measurements;
c. Use photoelectric power meters;
d. Perform ambient light suppression;
e. Use attenuators;
f. Perform wavelength calibration;
g. Use radiometric filters;
h. Use photometric filters; and,
i. Use disc calorimeters.

Module Outline:

I. Discuss and Demonstrate Radiometric and Photometric Principles
   A. Radiometric and photometric quantities
   B. Solid angle measurement
   C. Power and irradiance measurements of a laser beam using photoelectric and disc calorimeter-type power meters
   D. Radiometric and photometric filters for light attenuation
   E. The use of attenuators for ambient light suppression
   F. The use of wavelength calibration curves
   G. Determination of optical density
   H. Practice and demonstration of skills listed above

LSR-E9-LE
Investigate Radiometry and Photometry
Attachment 2: **MASTER** Laboratory Exercise

Successful completion of this technical module will be based on the students' successful completion of the following components:

1. Define and differentiate between radiometric and photometric quantities;
2. Define and calculate solid angle;
3. Perform power and irradiance measurements of a laser beam using; photoelectric and disc calorimeter-type power meters;
4. Explain and demonstrate and use radiometric and photometric filters for light attenuation;
5. Explain and demonstrate and use attenuators for ambient light suppression;
6. Explain and demonstrate and use wavelength calibration curves;
7. Determine optical density of a filter; and,
8. Practice and demonstration of skills listed above.

Rules of Conduct

Students must behave in a professional and responsible manner, observing all laser safety rules as outlined in ANSI-Z136.1, *Safe Use of Lasers*.

Laser Machinist .... apply the principles of electronics, lasers, optics, materials, engineering documentation, CAD/CAM, and systems integration to manufacture products following current industry and company standards.

Duties	Tasks												
A Practice Laser Safety	A-1 Discuss laser safety standards	A-2 Discuss basic laser principles	A-3 Discuss laser hazards	A-4 Discuss control measures									
B Apply Mathematical Concepts	B-1 Perform basic mathematical functions	B-2 Perform algebraic functions	B-3 Study exponents and right triangle geometry	B-4 Study elements of plane and solid geometry	B-5 Perform data evaluation and statistical analysis	B-6 Perform proportioning and interpolation	B-7 Perform basic trigonometric calculations	B-8 Investigate vectors and vector systems	B-9 Investigate the Cartesian Coordiante System				
C Perform Measurement and Inspection	C-1 Study basics of metrology	C-2 Select instruments used for measurement	C-3 Study datums and the three plane concept	C-4 Select gauging tools	C-5 Use CMM for location of features	C-6 Perform measurements for orientation tolerances	C-7 Perform measurment by optical comparison	C-8 Perform measurements for circularity, concentricity, runout, and straightness tolerances	C-9 Investigate advanced metrology topics				
D Troubleshoot Industrial Electronics and Control	D-1 Perform DC voltage, current, and power measurements	D-2 Perform AC voltage, current, and power measurements	D-3 Investigate digital logic systems	D-4 Investigate diode applications	D-5 Investigate transistors and thyristors	D-6 Investigate operational amplifiers	D-7 Investigate power supply circuits						
E Apply Concepts of Modern Optics	E-1 Study reflection and refraction at plane surfaces	E-2 Perform imaging with a single lens	E-3 Perform imaging with multiple lenses	E-4 Study F-stops and apertures	E-5 Use laser beam-expanding collimators	E-6 Study interference	E-7 Study diffraction	E-8 Study polarization	E-9 Investigate radiometry and photometry				
F Perform CNC Machining	F-1 Apply machine specific nomenclature and terminology	F-2 Investigate the Cartesian coordinate system as applied to a CNC mill or laser	F-3 Apply CNC programming language	F-4 Perform start up, tool changing, and ending of programs	F-5 Perform positioning and basic drilling	F-6 Create a sub-program	F-7 Perform contouring	F-8 Apply tool radius compensation	F-9 Perform program preparation	F-10 Apply special laser coding parameters			
G Investigate Industrial Laser Systems	G-1 Review characteristics of light	G-2 Investigate emission and absorption of light	G-3 Discuss optical cavities and laser modes	G-4 Discuss temporal characteristics of lasers	G-5 Investigate spatial characteristics of lasers	G-6 Discuss laser classifications and characteristics							
H Perform Computer-Aided Drafting (CAD)	H-1 Discuss and understand PC basics	H-2 Discuss CAD basics and file management	H-3 Use drawing settings	H-4 Perform basic editing commands	H-5 Create drawings with accuracy	H-6 Organize drawing information	H-7 Control the display of drawings	H-8 Use intermediate drawing commands	H-9 Perform intermediate editing commands	H-10 Create multi view drawings	H-11 Create sectioned drawings	H-12 Investigate basic dimensioning	H-13 Perform advanced dimensioning
	H-14 Use and manipulate blocks	H-15 Use blocks to automate the drawing process											
I Perform Laser Materials Processing	I-1 Review laser safety standards	I-2 Discuss lasers used for materials processing	I-3 Discuss laser optics and beam characteristics	I-4 Investigate absorption of laser energy	I-5 Use lasers for welding and surface treatment	I-6 Use lasers for material removal							
J Perform Computer-Aided Manufacturing (CAM)	J-1 Discuss and understand the basics of a PC based CAM system	J-2 Discuss basic CAM operations	J-3 Set up cutting tools	J-4 Create simple part profiles	J-5 Create and edit complex part profiles	J-6 Perform roughing, drilling, and counterboring	J-7 Advanced editing of part profiles	J-8 Edit tool paths	J-9 Use construction layers in SmartCAM	J-10 Perform user commands and machine events	J-11 Create families of parts	J-12 Perform CAD/CAM integration	J-13 Perform code generation

LSR PM4
040698

BEST COPY AVAILABLE

LSR-F1-HO1
Apply Machine Specific Nomenclature and Terminology
Attachment 1: **MASTER** Handout No. 1

Objective(s):

Upon completion of this unit the student will be able to:

a. Discuss CNC machine specifications;
b. Start up the machine;
c. Operate the machine's keyboard and function keys;
d. Establish radius offsets;
e. Perform programming basics at the MCU (machine control unit);
f. Prove out a program; and,
g. Load and run a part program.

Note: A Matsuura MC-500V2 CNC milling machine with Yasnac MX1 controller will be used as a typical CNC machine.

Module Outline:

I. Discuss and Apply Machine Nomenclature and Terminology
   A. Study machine specifications
   B. Start up the machine
   C. Study the machine's keyboard and function keys
   D. Establish radius offsets
   E. Study programming basics at the MCU (Machine control unit)
   F. Prove out a program
   G. Load and run a part program

ERIC

1-2-1
Table

Table work area	380 x 865 mm (14.96" x 34.06")
Table T slots	18 mm x 3 (11/16" x 3) on 10 mm (4") centers
Work weight on table	250 kgs (550 lbs)

1-2-2
Travel and range

Longitudinal (X) axis	510 mm (20")
Cross (Y) axis	360 mm (14.1")
Vertical (Z) axis	450 mm (17.7")
Distance from table top to spindle end	150-60 mm (5.9-23.622")
Distance from spindle center to column guideway	410 mm (16.1")

1-2-3
Spindle

Spindle nose specification	Matsura standard no. 35
Spindle speeds available	40-400 rpm 60-600 rpm 100-1000 rpm S: 4 digit direct rpm input Standard (electrical)

1-2-4
Feedrate

Rapid traverse - X/Y	15000 mm/min. (590")
-Z	12000 mm/min. (472")
Cutting feedrate by tape	1-500 mm/min. (0.1 - 196.8 ins./min.)
Manual continuous feedrate	0 - 300 mm/min. (0-78.8 ins./min. in 25 steps

1-2-5
Motors

Main spindle motor (AC frequency motor)	AC 3.7/5.5 Model EEVA-51KM

Coolant pump motor	* 0.25 KW, 2 poles, 3 phase
Lubrication pump motor for slideways	0.85/0.85 /1. KW
Axis feed motors (X/Y/Z)	0.45KW
Spindle oil cooler motor (Option)	*N.B. Machine no. 8305

1-2-6

Automatic Tool Changer

Number of tools	20
Tool selection	Random by address code, bi-direction rotation of magazine
Tool holder specification	Matsura standard
Pullstud specification	Matsura standard
Max. adjacent tool diameter	76 mm dia. 20 tools
Tool diameter	15 mm
Max. tool weight	6 kgs
Max. tool length	250 mm

1-2-7

Dimensions & Weight

Machine height	2569 mm
Required Floor space	2990 (W) x 2290 (D)
Machine weight with NC unit	36000 kgs (7940 lbs)

1-2-8

Input Power

AC200/220V +/-10%, 3 phase
50/60 Hz +/-1Hz, 15 KVA
(except above, a transformer is required)

1-2-9

Air Source

5K gf/cm2

1-2-10

Standard accessories include:

- Operation tools in a box
- Leveling bolts, pads and nuts
- Coolant unit
- Spindle speed tachometer and load meter
- One set of spare parts
- Pre-wired 4th axis
- Lubrication unit

Matsuura MC-500V2 with Yasnac MX1 controls (operations)

Function Keys and Other MDI Keyboard Components

"ALM" (Alarm) - 3 pages at CRT
1. Alarm and Users Messages
2. Timer Display
   In any "Mode," press "ALM" and page up or down to Timer Display.
   To zero out, key in # and "ORG."
3. Program Number Directory and characters remaining in storage.

"DGN" (Diagnostics) - Used for troubleshooting - technician only.

"PRM" (Parameters) - Defines limits and capabilities of machine.Generally not changed.
Listed in the Yasnac Manual starting on page
To change parameters: MDI, set Systems switch at tape door to # l, and proceed.

"SET" (Settings) - Parameters that are more accessible for change.
To change settings, do not use systems switch as with "PERM"

"COM" (Command) - Three pages of display, only.
1. Current or last program information.
2. Sub-Program Nesting
3. Offsets in Force.

"PROG" (Program) - MDI, Memory, Edit.
"Pos" (Position)
"LSK" on screen is to skip over manual readable messages on tape.

Position Screen

"Universal" means from "Part Zero."
"Increment" means distance to go.
"External" allows to zero display.

"OFS" (Offsets) H(D) 00-99

"MEM" DATA" is used in conjunction with outside source.

OUT can be used with PC
IN can be used with PC
VER for Tape only

A.T.C.
"Tool Unclamp" allows mounting or release of toolholders at spindle.

Connector for PC; Std. RS232; male DB25 Pin

Mach Lock
M.S.T. >> these are not frequently used.
Z-FEED>> In so doing, can easily lose position.

"Zero Return" in "Jog" or "Rapid" only to return Machine Home.

"Next" for merging tape info. to end of existing program.

54 N/A, G53 - Yes! in G90, G28 always in G91, 60-6000 RPM,

No cutter Compensation in MDI, MDI will accept more than a word.

Machine Start Up and Return Z. Y & Z to Home Position

1. Turn on Air (rear of machine)
2. Main Power Switch (left side of machine)
3. Emergency Reset --- (front panel) Pull out
4. Power Button -- (front panel) Press Twice
5. Turn the Feed override selector switch to 25%
6. To return X, Y, & Z to the home position --- Select "prog" function from keypad,
   Select MDI, type G91 G28 X0 Y0 Z0 depress the "wr" key, now depress Cycle Start.
   (; do not use the end of block command for this operation)
7. Turn the spindle on to worm up.
   MDI mode type S600 M3; depress the "wr" keypad, Cycle Start

Mounting Tools

One method of mounting tools is to:
"Magazine Down" - requires "spindle keylock" (M19). Be in any manual "Mode" and use "Magazine CW."

Best method of loading tools is to:
1. Mount cutting tools in respective holders apart from machine.
2. Call T01 in MDI.
3. Mount T0l in spindle using "ToolUnclamp."

4. Call T02, M6, EOB, WR, Cycle Start. Tool changer will extract T01 from spindle; magazine will index to position 2 in preparation for T02.
5. Mount T02 in spindle using "Tool Unclamp."
6. Etc.

Establishing Origin Point (Part Zero)

D98 is assigned to the "X" axis, D99 is assigned to the "Y" axis

1. With edge finder, locate part edge along "X"-axis. (use handle)
2. With edge finder in contact with the part depress the "pos" function on the machine screen
   (Record on a piece of paper the current machine position of "X" from the position screen menu.)
3. Retract "Z" axis above part then compensate for the radius of the edge finder
   (You will add the .100 to the recorded amount on the paper then move the machine to that coordinate observing the numerical values from the machine "pos" screen)
4. Selector switch to MDI, Select "OFS" keypad enter X value from "pos" screen also D98 WR.
   An example: -5.4677 D98 then hit the "WR" key
5. With edge finder, locate part edge along "Y"-axis. (use handle)
6. With edge finder in contact with the part depress the "pos" function keypad.
   (Record on a piece of paper the current position of "Y.")
7. Retract "Z" axis above par then compensate for the radius of the edge finder
   (Add the.100 to the recorded amount on the paper. Move the machine to that coordinate observing the numerical values from the function "pos" screen)
8. Mode switch to MDI, Select "OFS" function, enter Y value from "pos" screen also D99 WR.
   An example: -3.9373 D99 then hit the "WR" key

Establishing Tool Length Offsets or "H" Offsets Using "T.L.M."

1. With machine spindle at Z0 (Home) and in any manual Mode, press "Measurement."
2. Select Offset function, curse to appropriate offset number.(corresponding to the tool number, "H" offset register)
3. Using handle, bring T01 to work surface establish "Part-Zero" with feeler gage
4. Press "write" key, Spindle will return to "Home" (Z0) .
5. Call T02 (T2 M6 "WR" Cycle start) and repeat steps 2 - 4.
6. Continue for all tools.
7. When done, turn off "Measurement."

"ORG" cancels previous Offset Values.

Sample "H" values

H01 -15.0671
H02 -9.2420

Establishing Radius Offsets (For Cutter Comp.)

D23 for endmill. Enter actual radius in appropriate offset register.
An example: (.233)

Load a New Program

1. Select "ALM" function keypad --- page down 2 times to view existing program numbers.
2. Mode switch to edit
3. Select "PROG" function
4. Type the letter "O" followed by the program number
5. Depress the "WR" keypad (This will establish your program number)
6. Enter your line numbers and end your lines with an "EOB" ";"
7. Located under the "EDIT" section of the keypad depress "INSERT" to insert the line
8. Repeat the process for the remaining lines

Load an Existing Program

1. Select "ALM" function --- page down 2 times to view existing program numbers
2. Mode switch to edit mode
3. Select "PROG" function
4. Type the letter "O" followed by the program number which you want to load
5. Depress the "Curser Down" keypad to load the existing program

View a Loaded Program

1. Mode switch to edit
2. Depress "Page down" keypad

Erase an Entire Line of Information

1. Mode switch to edit
2. Hit the "EOB" key then "ERASE"

Call up a Specific Tool

1. Selector switch to "MDI"
2. Type the tool number, M6 ; then "WR" keypad
3. Cycle start

To Check the Program Library

Select the "ALARM" keypad. Page down two times. This will give you a list of progarms.

To Erase a Program from Memory

Select the "ALARM" keypad. Page down two times. Call out the program to be erased and select the erase keypad located under the "EDIT" touchpad.

Set up for SmartCAM Machine to Receive a Program

Current machine parameters

COM PORT # 1
BAUD RATE 4800
PARITY >>> EVEN
DATA BITS 7
STOP BITS 1
Xon / X off ENABLE

On the Matsuura

1. Plug in the RS232 cable
2. Mode switch to "EDIT"
3. Edit lock key switch set to the "OFF" position
4. "Function Keypad" set to "Program"
5. Depress the "RESET BUTTON" (TOP RIGHT ON CONTROLLER)
6. "MEM DATA" select "IN"

In SmartCam

Main Menu >> Communicate

1. SET_COM (pick the file to emulate MAT.SC)
2. TO_MACHINE (pick the file to send)

On the Matsuura

Depress the "RESET BUTTON"

To change the baud rate on Matsuura (see pg 197 baud rate in the Yasnac manual)

1. Parm keypad
2. Change control inside side door to # 1

3. Page down until you reach parameter # 6026
4. Hit the insert key after paging to the correct parameter (this places the curser inside the parameter #, use the curser up/down touchpad to move to the correct position)
5. To change a parameter number >> type the new number and hit the insert keypad.

To Change the Baud Rate in SmartCAM

1. Edit plus
2. Call file C:\sm6\Mach.SC
3. File read
4. File Edit >> Make your changes

To Import a File into the Matsuura Without SmartCAM

Copy (file name without an extension) Com 1

To Set The Mode Of Transfer

C:\Mode Com 1:4800,E, 1,N

To Export a Program

Repeat the Same Process as per Page # 5 Notes
Step # 6 "Mem Data" select "OUT"

To Run DNC

1. Mode Switch >> Tape
2. Hit the cycle start button
3. Send the program in through SmartCam (Note: The only thing displayed on the CRT will be the line numbers!!!)

Prove out a Program

To call up a program or sub-program: Enter program #, press cursor down.

1. Mode Switch in "Memory."
2. Enter Program Number and curse down.
3. Engage "Single Block" and "Dry Run."
4. Drop Feed Rate to Zero.
5. "Cycle Start"

Observations to improve program:

* A Spot Drill is better than C'drill; maybe big enough to accommodate C'sink.
* When tapping, never use "Dry Run." It's do or die.
* PERM (Parameters 6211 for G73 and 6213 for G83) for retract are presently set for .05.

LSR-F1-LE
Apply Machine Specific Nomenclature and Terminology
Attachment 4: **MASTER** Laboratory Exercise

Successful completion of this technical module will be based on the students' successful completion of the following components:

1. Demonstrate an understanding of machine specifications;
2. Start up the machine;
3. Operate the machine's keyboard and function keys;
4. Establish radius offsets;
5. Perform programming basics at the MCU (machine control unit);
6. Prove out a program; and,
7. Load and run a part program.

Rules of Conduct

1. Absolutely no horseplay or practical joking will be tolerated.
2. Do not talk to anyone who is operating a machine.
3. Walk only in the designated traffic lanes.
4. Dress appropriately; at the absolute minimum, you must have:
   a. No loose clothing, including ties;
   b. Long hair properly stowed;
   c. No jewelry;
   d. Hard, closed-toe shoes;
   e. Eye protection (safety glasses); and,
   f. Ear protection (plugs or headset).
5. Follow all institutional safety rules.

LSR-F2-HO1
Investigate the Cartesian Coordinate System as Applied to a CNC Mill or Laser
Attachment 1: MASTER Handout No. 1

Objective(s):

Upon completion of this unit the student will be able to:

a. Discuss the Cartesian coordinate system;
b. Discuss the basics of a coordinate measurement system;
c. Plot points in an XYZ coordinate system;
d. Set (G90) and program in absolute coordinates; and,
e. Set (G91) and program in incremental coordinates.

Note: A Matsuura MC-500V2 CNC milling machine with Yasnac MX1 controller will be used as a typical CNC machine.

Module Outline:

I. Investigate the Cartesian Coordinate System as Applied to a CNC Mill and Laser
   A. Study the Cartesian coordinate system
   B. Study the basics of a coordinate measurement system
   C. Plot points in an XYZ coordinate system
   D. Set (G90) and program in absolute coordinates
   E. Set (G91) and program in incremental coordinates

LSR-F2-HO2
Investigate the Cartesian Coordinate System as Applied to a CNC Mill or Laser
Attachment 2: **MASTER** Handout No. 2

CNC Programming and Machine Definitions

Machine Home: Farthest possible axis travel in the X+, Y+, and Z+ directions.

Part Zero or Origin Point: The intersection of the X, Y, & Z axes.

Offset register: A numbered storage location (1 through 99) in which you may store only one numeric value. Offset registers are used for numeric values not known at the time of programming.

Absolute (G90): Defining endpoints of motion in terms of Part Zero

Incremental (G91): Defining endpoints of motion in terms of present location. The present location is X0, Y0.

Modal: Describes a code which remains effective until canceled (or updated) by a code of the same type or "group" (G codes only).

Non-Modal: Describes a code that is effective only for the "block" (or line in which that code is being programmed; sometimes known as a "one-shot code).

LSR-F2-LE
Investigate the Cartesian Coordinate System as Applied to a CNC Mill or Laser
Attachment 3: **MASTER** Laboratory Exercise

Successful completion of this technical module will be based on the student's successful completion of the following components:

1. Demonstrate an understanding of the Cartesian coordinate system;
2. Discuss the basics of a coordinate measurement system;
3. Plot points in an XYZ coordinate system;
4. Set (G90) and program in absolute coordinates; and,
5. Set (G91) and program in incremental coordinates.

Rules of Conduct

1. Absolutely no horseplay or practical joking will be tolerated.
2. Do not talk to anyone who is operating a machine.
3. Walk only in the designated traffic lanes.
4. Dress appropriately; at the absolute minimum, you must have:
   a. No loose clothing, including ties;
   b. Long hair properly stowed;
   c. No jewelry;
   d. Hard, closed-toe shoes;
   e. Eye protection (safety glasses); and,
   f. Ear protection (plugs or headset).
5. Follow all institutional safety rules.

LSR-F3-HO1
Apply CNC Programming Language
Attachment 1: **MASTER** Handout No. 1

Objective(s):

Upon completion of this unit the student will be able to:

a. Discuss word-address and variable block formats;
b. Discuss standard programming formats such as FANUC; and,
c. Discuss the concept of modal addresses.

Note: A Matsuura MC-500V2 CNC milling machine with Yasnac MX1 controller will be used as a typical CNC machine.

Module Outline:

I. Discuss and Apply the CNC Programming Language
   A. Study word-address and variable block formats
   B. Study standard programming formats such as FANUC
   C. Study the concept of modal addresses

CNC Programming Language Definitions

Address:

A letter coded storage area for a piece of numerical data. Each "letter-address" allows the control to perform a specific kind of function. Each "letter-address" will accept only numeric information according to a specific format or form.

Leading Zero:

Place holding zero which precedes the first significant numeral in a "word." May be omitted on all letter addresses.

Trailing Zeros:

Place holding zeros which follow the last significant numeral in a "word." Omit only when a decimal point is used.

so: X-0001.2500 can be written: Z-1.25

X-125 means X-.0125; here we see the value of not forgetting the decimal.

Word:

Consists of one "letter address" followed by at least one numeral.
Example: G80

Block:

One or more "words" followed by an "end of block" code, denoted by the semicolon symbol (also called an "EOB" code).

Variable:

Indicates that a "block" allows programming of "words" in no specific order.

Example:
N20 G43 Z___H___T___;
could be written : T___H___Z___N20G43;

The entire line is read first, then executed.

Traditional word order:

N___G___G___X___Y___Z___F___M___S___T___;

Note: Normally, a tool would be called on a separate line, but with a double-arm tool changer, "T" may appear with such words.

Program:

A sequential listing of a "blocks" preceded by "O___" (program number) and followed by an M30 or M99 code (sub program).

Commonly Used Letter Addresses That Are Modal

"G" Codes:
(preparatory functions) Most are arranged in "Modal" groups.

"F" Codes:
(feedrate) May be expressed as inches or mm per minute.

"S" Codes:
(spindle speed) Expressed as RPM.

"T" Codes:
(tool numbers) Not necessarily pocket numbers!

"D" Codes:
Used to offset registers with G41 & G42.

"H" Codes:
Used to access offset registers with G43.

LSR-F3-LE
Apply CNC Programming Language
Attachment 4: **MASTER** Laboratory Exercise

Successful completion of this technical module will be based on the students' successful completion of the following components:

1. Demonstrate an understanding of word-address and variable block formats;
2. Demonstrate an understanding of standard programming formats such as FANUC; and,
3. Discuss the concept of modal addresses.

Rules of Conduct

1. Absolutely no horseplay or practical joking will be tolerated.
2. Do not talk to anyone who is operating a machine.
3. Walk only in the designated traffic lanes.
4. Dress appropriately; at the absolute minimum, you must have:
   a. No loose clothing, including ties;
   b. Long hair properly stowed;
   c. No jewelry;
   d. Hard, closed-toe shoes;
   e. Eye protection (safety glasses); and,
   f. Ear protection (plugs or headset).
5. Follow all institutional safety rules.

LSR-F4-HO1
Perform Start Up, Tool Changing, and Ending of Programs
Attachment 1: MASTER Handout No. 1

Objective(s):

Upon completion of this unit the student will be able to:

a. Start the machine;
b. Zero the machine to the part;
c. Discuss and program tool changing; and,
d. Discuss and program the ending of a CNC program for both mill and laser.

Note: A Matsuura MC-500V2 CNC milling machine with Yasnac MX1 controller will be used as a typical CNC machine.

Convergent Energy Diamond(Series Laser) is being used as a typical CNC laser machine system.

Module Outline:

I. Perform Start Up, Tool Changing, and Ending of Programs
   A. Start the machine
   B. Zero the machine to the part
   C. Discuss and program tool changes
   D. Discuss and program the ending of a CNC program for both mill and laser

Typical "M" Codes for Ending Laser CNC Programs

M00 Program Stop: Machine operation will stop until the Start button is pressed.

M30 Program End: Cursor reset to top of program.

M61 Shutter Close: Z-axis retract, Gas Off

Successful completion of this technical module will be based on the students' successful completion of the following components:

a. Demonstrate how to start the machine;
b. Demonstrate how to zero the machine to the part;
c. Discuss and program tool changing; and,
d. Discuss and program the ending of a CNC program for both mill and laser.

Rules of Conduct

1. Absolutely no horseplay or practical joking will be tolerated.
2. Do not talk to anyone who is operating a machine.
3. Walk only in the designated traffic lanes.
4. Dress appropriately; at the absolute minimum, you must have:
   a. No loose clothing, including ties;
   b. Long hair properly stowed;
   c. No jewelry;
   d. Hard, closed-toe shoes;
   e. Eye protection (safety glasses); and,
   f. Ear protection (plugs or headset).
5. Follow all institutional safety rules.

LSR-F5-HO
Perform Positioning and Basic Drilling
Attachment 1: **MASTER** Handout

Objective(s):

Upon completion of this unit the student will be able to:

a. Start and stop the spindle;
b. Initiate the drilling cycle;
c. Program using the R-level to avoid obstructions; and,
d. Cancel the drilling cycle.

Note: A Matsuura MC-500V2 CNC milling machine with Yasnac MX1 controller will be used as a typical CNC machine.

Module Outline:

I. Perform Positioning and Basic Drilling
   A. Start and stop the spindle (M03 and M05)
   B. Initiate the drilling cycle (G81)
   C. Program using the "R" level to avoid obstructions (G98 and G99)
   D. Cancel the drilling cycle (G80)

Note: For I.B. through I.D., review and discuss explanations and sample programs of drilling cycles.

Successful completion of this technical module will be based on the students' successful completion of the following components:

a. Demonstrate how to start and stop the spindle;
b. Demonstrate how to initiate the drilling cycle;
c. Program using the R-level to avoid obstructions; and,
d. Cancel the drilling cycle.

Rules of Conduct

1. Absolutely no horseplay or practical joking will be tolerated.
2. Do not talk to anyone who is operating a machine.
3. Walk only in the designated traffic lanes.
4. Dress appropriately; at the absolute minimum, you must have:
   a. No loose clothing, including ties;
   b. Long hair properly stowed;
   c. No jewelry;
   d. Hard, closed-toe shoes;
   e. Eye protection (safety glasses); and,
   f. Ear protection (plugs or headset).
5. Follow all institutional safety rules.

LSR-F6-HO1
Create a Sub-Program
Attachment 1: **MASTER** Handout No. 1

Objective(s):

Upon completion of this unit the student will be able to:

a. Study the applications of sub-programming;
b. Study the CNC codes used in sub-programming (M98, P###, L##);
c. Call a sub-program (M98); and,
d. End a sub-program (M99).

Note: A Matsuura MC-500V2 CNC milling machine with Yasnac MX1 controller will be used as a typical CNC machine.

Module Outline:

I. Create a Sub-Program
   A. Study the applications of sub-programming
   B. Study the CNC codes used in sub-programming (M98, P###, L##)
   C. Call a sub-program (M98)
   D. End a sub-program (M99)

Note: Review and discuss explanations and sample programming on sub-programming.

Sub-Programming: General Information to Parts Production

Subroutine programming may be used whenever there will be blocks common to more than one tool or more than one feature on the workpiece.

Like all other programs, subroutines start with a program number; and a "comment statement" if wanted.

Subroutines always end with an M99.

Subroutines are accessed (or called) by "M98 P_____."

Subroutines are stored in the memory along with any other programs. There is no special area in the memory storage.

LSR-F6-LE
Create a Sub-Program
Attachment 3: **MASTER** Laboratory Exercise

Successful completion of this technical module will be based on the students' successful completion of the following components:

1. Demonstrate an understanding of the applications of sub-programming;
2. Discuss and program the CNC codes used in sub-programming (M98, P###, L##);
3. Call a sub-program (M98); and,
4. End a sub-program (M99).

Rules of Conduct

1. Absolutely no horseplay or practical joking will be tolerated.
2. Do not talk to anyone who is operating a machine.
3. Walk only in the designated traffic lanes.
4. Dress appropriately; at the absolute minimum, you must have:
   a. No loose clothing, including ties;
   b. Long hair properly stowed;
   c. No jewelry;
   d. Hard, closed-toe shoes;
   e. Eye protection (safety glasses); and,
   f. Ear protection (plugs or headset).
5. Follow all institutional safety rules.

LSR-F7-HO
Perform Contouring
Attachment 1: **MASTER** Handout

Objective(s):

Upon completion of this unit the student will be able to:

a. Initiate rapid traverse (G00);
b. Perform linear cutting (G01);
c. Perform the necessary trigonometry to obtain program coordinates;
d. Perform circular cutting (G02 and G03 with I, J, K, parameters); and,
e. Discuss how to select each of the three orthogonal planes (G17, G18, G19).

Note: A Matsuura MC-500V2 CNC milling machine with Yasnac MX1 controller will be used as a typical CNC machine.

Module Outline:

I. Perform Contouring
   A. Initiate rapid traverse (G00)
   B. Perform linear cutting (G01)
   C. Perform the necessary trigonometry to obtain program coordinates
   D. Perform circular cutting (G02 and G03 with I, J, K, parameters)
   E. Discuss how to select each of the three orthogonal planes (G17, G18, G19)

Successful completion of this technical module will be based on the students' successful completion of the following components:

1. Demonstrate how to initiate rapid traverse (G00);
2. Perform linear cutting (G01);
3. Perform the necessary trigonometry to obtain program coordinates;.
4. Perform circular cutting (G02 and G03 with I, J, K, parameters); and,
5. Demonstrate an understanding of how to select each of the orthogonal planes.

LSR-F7-LE2
Perform Contouring
Attachment 3: **MASTER** Laboratory Exercise No. 2

Students will:

1. Perform math; and,
2. Create three CNC programs*.

* The instructor may use his/her discretion as to how many programs are practical.

Rules of Conduct

1. Absolutely no horseplay or practical joking will be tolerated.
2. Do not talk to anyone who is operating a machine.
3. Walk only in the designated traffic lanes.
4. Dress appropriately; at the absolute minimum, you must have:
   a. No loose clothing, including ties;
   b. Long hair properly stowed;
   c. No jewelry;
   d. Hard, closed-toe shoes;
   e. Eye protection (safety glasses); and,
   f. Ear protection (plugs or headset).
5. Follow all institutional safety rules.

LSR-F8-HO1
Apply Tool Radius Compensation
Attachment 1: **MASTER** Handout No. 1

Objective(s):

Upon completion of this unit the student will be able to:

a. Understand the purpose and application of tool radius compensation;
b. Turn on cutter comp left (G41);
c. Turn on cutter comp right (G42); and,
d. Turn off (cancel) cutter comp (G40).

Note: A Matsuura MC-500V2 CNC milling machine with Yasnac MX1 controller will be used as a typical CNC machine.

Module Outline:

I. Discuss and Apply Tool Radius Compensation
   A. Study the purpose and application of tool radius compensation
   B. Turn on cutter comp left (G41)
   C. Turn on cutter comp right (G42)
   D. Turn off (cancel) cutter comp (G40)

Tool Radius Compensation: Purpose and Application

Tool Radius Compensation Allows:

The ability to program the actual part coordinates (tool diameter is ignored) while storing the tool radius in an offset register. Effectively a zero tool radius is being used.

Single adjustments of the stored tool radius value to compensate for tool wear or deflection. As tooling wears or tooling is changed, one register is modified, not entire program.

The ability to use nonstandard tool diameters.

The use of the codes – G40, G41, & G42:

At set up:

1. Store the tool radius in an offset register that will not be used for any other purpose. This should be a positive (+) value.

In the program:

1. The selection of G41 or G42 (right or left cutter comp) is based on the direction of intended tool motion. Will the cutter be to the right or left of the workpiece?

2. Program G41 or G42 in a block that also contains axis motion and a "D___" word.

3. G40, G41, or G42 may be invoked only while in G00 or G01.

4. Block containing G41 or G42 and "D___" should contain an axis motion that is slightly longer than the anticipated tool radius. This axis motion may be at 90(to the first surface to be machined. This simply allows the operator to observe an approach move.

5. Program G40 in a block containing an axis motion that is slightly longer than the anticipated tool radius. This axis motion may be at 90° to the last surface to be machined.

6. G41/G42 cause the control to "read ahead" at least two blocks beyond the block being executed. Therefore, avoid programming two or more consecutive blocks that do not contain axis motion in the plane specified by G17, G18, or G19.

Successful completion of this technical module will be based on the students' successful completion of the following components:

1. Discuss the purpose and application of tool radius compensation;
2. Turn on cutter comp left (G41);
3. Turn on cutter comp right (G42); and,
4. Turn off (cancel) cutter comp (G40).

Rules of Conduct

1. Absolutely no horseplay or practical joking will be tolerated.
2. Do not talk to anyone who is operating a machine.
3. Walk only in the designated traffic lanes.
4. Dress appropriately; at the absolute minimum, you must have:
   a. No loose clothing, including ties;
   b. Long hair properly stowed;
   c. No jewelry;
   d. Hard, closed-toe shoes;
   e. Eye protection (safety glasses); and,
   f. Ear protection (plugs or headset).
5. Follow all institutional safety rules.

LSR-F9-HO
Perform Program Preparation
Attachment 1: **MASTER** Handout

Objective(s):

Upon completion of this unit the student will be able to:

a. Identify program planning steps;
b. Set beam size and power (laser applications);
c. Determine cutting depth (mill) or penetration (laser);
d. Determine cutting speed (mill only) and feed; and,
e. Determine and design fixtures for part holding.

Note: A Matsuura MC-500V2 CNC milling machine with Yasnac MX1 controller will be used as a typical CNC machine.

Convergent Energy Diamond (Series Laser) is being used as a typical CNC laser machine system.

Module Outline:

I. Perform Program Preparation
   A. Identify program planning steps
   B. Set beam size and power (laser applications)
   C. Determine cutting depth (mill) or penetration (laser)
   D. Determine cutting speed (mill only) and feed
   E. Determine and design fixtures for part holding

Successful completion of this technical module will be based on the students' successful completion of the following components:

a. Demonstrate how to identify program planning steps;
b. Demonstrate how to set beam size and power (laser applications);
c. Determine cutting depth (mill) or penetration (laser);
d. Determine cutting speed (mill only) and feed; and,
e. Determine and design fixtures for part holding.

Rules of Conduct

1. Absolutely no horseplay or practical joking will be tolerated.
2. Do not talk to anyone who is operating a machine.
3. Walk only in the designated traffic lanes.
4. Dress appropriately; at the absolute minimum, you must have:
   a. No loose clothing, including ties;
   b. Long hair properly stowed;
   c. No jewelry;
   d. Hard, closed-toe shoes;
   e. Eye protection (safety glasses); and,
   f. Ear protection (plugs or headset).
5. Follow all institutional safety rules.

LSR-F10-HO1
Apply Special Laser Coding Parameters
Attachment 1: **MASTER** Handout No. 1

Objective(s):

Upon completion of this unit the student will be able to:

a. Select assist gas: oxygen low;
b. Select assist gas: oxygen high;
c. Select assist gas: nitrogen;
d. Select assist gas: air;
e. Turn on and cancel selected assist gas; and,
f. Set continuous wave, gated pulsing, super pulsing, and hyper pulsing.

Note: Convergent Energy Diamond (Series Laser) is being used as a typical CNC laser machine system.

Module Outline:

I. Discuss and apply special laser coding parameters
   A. Select assist gas-oxygen low
   B. Select assist gas-oxygen high
   C. Select assist gas-nitrogen
   D. Select assist gas-air
   E. Turn on and cancel selected assist gas
   F. Set continuous wave, gated pulsing, super pulsing, and hyper pulsing

---

Typical "M" Codes for Laser CNC Machines

M00 Program Stop: Machine operation will stop until the Start button is pressed
M02 Program End (Normally not used)
M08 Water assist on (enable)
M09 Water assist off (disable)
M30 Program End: Cursor reset to top of program
M58 High Simmer (Normal setting, for all pulse settings)
M59 Low Simmer (For CW and Gated Pulse settings only)
M60 Shutter Open (Normally not used)
M61 Shutter Close: Z-axis retract, Gas Off
M63 Assist Gas: Oxygen (02) Low
M64 Assist Gas: Oxygen (02) High
M65 Assist Gas: Nitrogen (N2)
M67 Assist Gas: Air
M68 Turns on the gas selected by M63, M64, M65, or M67
M69 Turns on the gas selected by M63
M70 Cancels M68 and M69
M80 Work chute 1 (12 x 12) Open/close
M88 Work chute 2 (31 x 39) Open
M89 Work chute 3 (31 x 39) Close
M90 Continuous Wave
M91 Gated Pulsing
M92 Super Pulsing
M93 Hyper Pulsing
M98 Sub-Program call (M98P.....)
M99 Sub-Program End

Sample Program, Laser CNC Machine

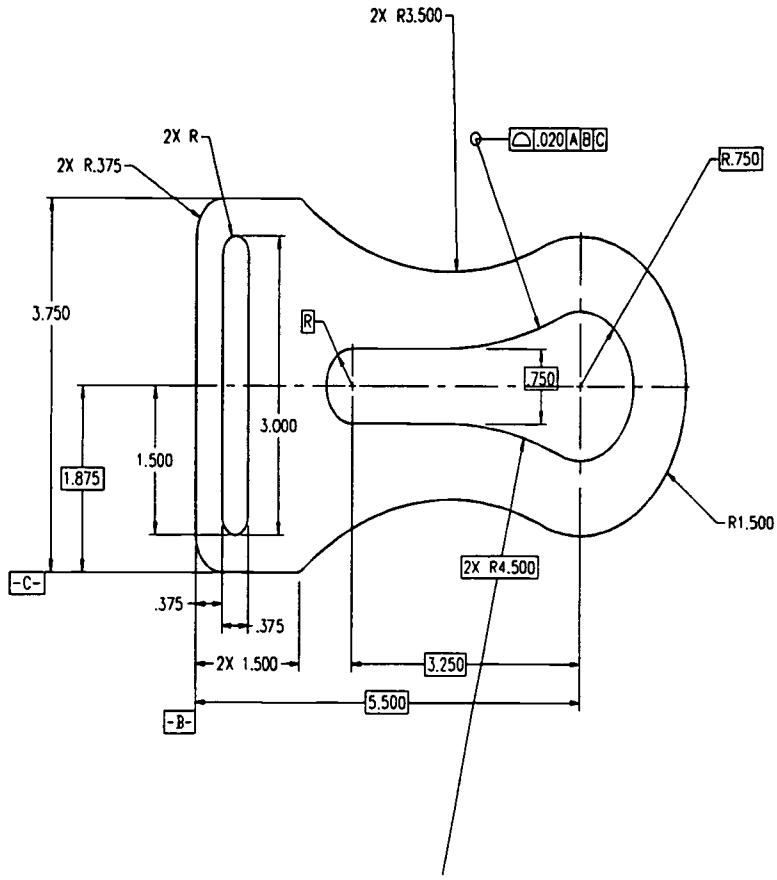

Part thickness is .062, Material is 1018 steel.

For piercing: Use Power = 1500, Frequency = 200, Gated pulsing, Duty = 25, O_2 assist gas, time .2

For cutting: Use Power = 1000, Frequency = 100, Continuous pulsing, Duty = 15, O_2 assist gas, feed rate 150

Use a laser kerf width of .008

Program:

%	
O0000	
G90 G92 X-.25 Y-.625 Z0	(Part zero is offset from stock zero)
S1500 B200 C25 J0.2	(Sets Pierce power, frequency, duty, & time)
M91 M63	(Sets Gated pulse and assist gas: O_2)
G41 M68 G00 X0.25 Y1.0	(Cutter comp on, gas on, move to first pierce)
Z-.062	
S1000 B100 C15 J0.0	(Sets cut power, frequency, duty, & dwell time)
M90 M63	(Sets continuous pulse and assist gas: O_2)
G01 Y4.0 F150	(Cut outside perimeter beginning at vertical line)
G02 X0.625 Y4.375 I0.625 J4.0	
G01 X1.75	
G03 X5.193 Y3.893 I3.893 J7.142	
G02 X7.25 Y2.5 I5.75 J2.5	
X5.193 Y1.107 I5.75 J2.5	
G03 X1.75 Y0.625 I3.893 J-2.142	
G01 X0.625	
G02 X0.25 Y1.0 I0.625 J1.0	
M61	(Close shutter, z-axis retract, gas off)
G40 G00 Z0.0	
S1500 B200 C25 J0.2	(Sets Pierce power, frequency, duty, & time)
M91 M63	(Sets Gated pulse and assist gas: O_2)
G42 M68 G00 X3.85 Y2.875	(Rapid to start of inside profile)
Z-.062	
S1000 B100 C15 J0.0	(Sets cut power, frequency, duty, & dwell time)
M90 M63	(Sets continuous pulse and assist gas: O_2)
G03 X5.465 Y3.194 I3.85 J7.125	(Cut inside profile)
G02 X6.5 Y2.5 I5.75 J2.5	

X5.465 Y1.806 I5.75 J2.5	
G03 X3.85 Y2.125 I3.85 J-2.125	
G01 X2.5	
G02 X2.125 Y2.5 I2.5 J2.5	
X2.5 Y2.875 I2.5 J2.5	
G01 X3.85	
M61	(Close shutter, z-axis retract, gas off)
G40 G00 Z0.0	
S1500 B200 C25 J0.2	(Sets Pierce power, frequency, duty, & time)
M91 M63	(Sets Gated pulse and assist gas: O_2)
G42 M68 G00 X0.625 Y1.188	(Rapid to start of slot)
Z-.062	
S1000 B100 C15 J0.0	(Sets cut power, frequency, duty, & dwell time)
M90 M63	(Sets continuous pulse and assist gas: O_2)
G01 Y3.813	(Cut slot)
G02 X1.0 Y3.813 I0.813 J3.813	
G01 Y1.188	
G02 X0.625 Y1.188 I0.813 J1.188	
M61	
G40 G00 Z0.0	
M70	(Cancel assist gas)
M30	
%	

Successful completion of this technical module will be based on the students' successful completion of the following components:

a. Demonstrate an understanding of how to program assist gas-oxygen high;
b. Demonstrate an understanding of how to program assist gas-nitrogen;
c. Demonstrate an understanding of how to program assist gas-air;
d. Demonstrate an understanding of how to turn on and cancel selected assist gas: and,
e. Demonstrate an understanding of how to set continuous wave, gated pulsing, super pulsing, and hyper pulsing.

Rules of Conduct

1. Absolutely no horseplay or practical joking will be tolerated.
2. Do not talk to anyone who is operating a machine.
3. Walk only in the designated traffic lanes.
4. Dress appropriately; at the absolute minimum, you must have:
   a. No loose clothing, including ties;
   b. Long hair properly stowed;
   c. No jewelry;
   d. Hard, closed-toe shoes;
   e. Eye protection (safety glasses); and,
   f. Ear protection (plugs or headset).
5. Follow all institutional safety rules.

Laser Machinist .... apply the principles of electronics, lasers, optics, materials, engineering documentation, CAD/CAM, and systems integration to manufacture products following current industry and company standards.

Duties	Tasks												
A Practice Laser Safety	A-1 Discuss laser safety standards	A-2 Discuss basic laser principles	A-3 Discuss laser hazards	A-4 Discuss control measures									
B Apply Mathematical Concepts	B-1 Perform basic mathematical functions	B-2 Perform algebraic functions	B-3 Study exponents and right triangle geometry	B-4 Study elements of plane and solid geometry	B-5 Perform data evaluation and statistical analysis	B-6 Perform proportioning and interpolation	B-7 Perform basic trigonometric calculations	B-8 Investigate vectors and vector systems	B-9 Investigate the Cartesian Coordiante System				
C Perform Measurement and Inspection	C-1 Study basics of metrology	C-2 Select instruments used for measurement	C-3 Study datums and the three plane concept	C-4 Select gauging tools	C-5 Use CMM for location of features	C-6 Perform measurements for orientation tolerances	C-7 Perform measurment by optical comparison	C-8 Perform measurements for circularity, concentricity, runout, and straightness tolerances	C-9 Investigate advanced metrology topics				
D Troubleshoot Industrial Electronics and Control	D-1 Perform DC voltage, current, and power measurements	D-2 Perform AC voltage, current, and power measurements	D-3 Investigate digital logic systems	D-4 Investigate diode applications	D-5 Investigate transistors and thyristors	D-6 Investigate operational amplifiers	D-7 Investigate power supply circuits						
E Apply Concepts of Modern Optics	E-1 Study reflection and refraction at plane surfaces	E-2 Perform imaging with a single lens	E-3 Perform imaging with multiple lenses	E-4 Study F-stops and apertures	E-5 Use laser beam-expanding collimators	E-6 Study interference	E-7 Study diffraction	E-8 Study polarization	E-9 Investigate radiometry and photometry				
F Perform CNC Machining	F-1 Apply machine specific nomenclature and terminology	F-2 Investigate the Cartesian coordinate system as applied to a CNC mill or laser	F-3 Apply CNC programming language	F-4 Perform start up, tool changing, and ending of programs	F-5 Perform positioning and basic drilling	F-6 Create a sub-program	F-7 Perform contouring	F-8 Apply tool radius compensation	F-9 Perform program preparation	F-10 Apply special laser coding parameters			
G Investigate Industrial Laser Systems	G-1 Review characteristics of light	G-2 Investigate emission and absorption of light	G-3 Discuss optical cavities and laser modes	G-4 Discuss temporal characteristics of lasers	G-5 Investigate spatial characteristics of lasers	G-6 Discuss laser classifications and characteristics							
H Perform Computer-Aided Drafting (CAD)	H-1 Discuss and understand PC basics	H-2 Discuss CAD basics and file management	H-3 Use drawing settings	H-4 Perform basic editing commands	H-5 Create drawings with accuracy	H-6 Organize drawing information	H-7 Control the display of drawings	H-8 Use intermediate drawing commands	H-9 Perform intermediate editing commands	H-10 Create multi view drawings	H-11 Create sectioned drawings	H-12 Investigate basic dimensioning	H-13 Perform advanced dimensioning
	H-14 Use and manipulate blocks	H-15 Use blocks to automate the drawing process											
I Perform Laser Materials Processing	I-1 Review laser safety standards	I-2 Discuss lasers used for materials processing	I-3 Discuss laser optics and beam characteristics	I-4 Investigate absorption of laser energy	I-5 Use lasers for welding and surface treatment	I-6 Use lasers for material removal							
J Perform Computer-Aided Manufacturing (CAM)	J-1 Discuss and understand the basics of a PC based CAM system	J-2 Discuss basic CAM operations	J-3 Set up cutting tools	J-4 Create simple part profiles	J-5 Create and edit complex part profiles	J-6 Perform roughing, drilling, and counterboring	J-7 Advanced editing of part profiles	J-8 Edit tool paths	J-9 Use construction layers in SmartCAM	J-10 Perform user commands and machine events	J-11 Create families of parts	J-12 Perform CAD/CAM integration	J-13 Perform code generation

LSR PM4
040693

BEST COPY AVAILABLE

LSR-G1-HO
Review Characteristics of Light
Attachment 1: **MASTER** Handout

Objective(s):

Upon completion of this unit the student will be able to:

a. Define and understand the wave nature of light;
b. Define polarization;
c. Define monochromaticity;
d. Define temporal and spatial coherence;
e. Explain constructive and non-destructive interference; and,
f. Define Brewster's Angle.

Module Outline:

I. Discuss and Review the Characteristic of Light
   A. Discuss the following wave properties of light
      1. Frequency
      2. Wavelength
      3. Phase
      4. Amplitude
      5. The electromagnetic spectrum
   B. Define polarization
      (Review module LSR-E8 "Study Polarization"
   C. Define monochromaticity
   D. Define temporal and spatial coherence
   E. Explain constructive and non-destructive interference
      (Review module LSR-E7 "Study Diffraction"
   F. Define and demonstrate Brewster's Angle
      (Review module LSR-E8 "Study Polarization"
   G. Practice and demonstration of skills listed above

LSR-G1-LE
Review Characteristics of Light
Attachment 2: **MASTER** Laboratory Exercise

Successful completion of this technical module will be based on the students' successful completion of the following components:

a. Define and understand the wave nature of light;
b. Define polarization;
c. Define monochromaticity;
d. Define temporal and spatial coherence;
e. Explain constructive and non-destructive interference;
f. Define Brewster's Angle; and,
g. Practice and demonstration of skills listed above.

Rules of Conduct

Students must behave in a professional and responsible manner, observing all laser safety rules as outlined in ANSI-Z136.1, *Safe Use of Lasers*.

LSR-G2-HO
Investigate Emission and Absorption of Light
Attachment 1: **MASTER** Handout

Objective(s):

Upon completion of this unit the student will be able to:

a. Determine energy of a photon;
b. Perform conversion of energy units;
c. Describe spontaneous absorption of a photon by an atom;
d. Describe spontaneous emission of a photon by an atom;
e. Describe stimulated emission of a photon by an atom;
f. Describe three and four-level laser systems;
g. Explain Doppler broadening of a spectral line;
h. Measure the emission spectra of a gas;
i. Describe three and four-level laser systems;
j. Use the exponential law of absorption;
k. Calculate the optical density of a filter;
l. Use optical filters; and,
m. Calculate the gain coefficient of a laser.

Module Outline:

I. Discuss Emission and Absorption of Light
   A. Determine energy of a photon
   B. Perform conversion of energy units
   C. Describe spontaneous absorption of a photon by an atom
   D. Describe spontaneous emission of a photon by an atom
   E. Describe stimulated emission of a photon by an atom
   F. Describe three and four-level laser systems
   G. Explain Doppler broadening of a spectral line
   H. Measure the emission spectra of a gas
   I. Describe three and four-level laser systems
   J. Use the exponential law of absorption
   K. Calculate the optical density of a filter
   L. Use optical filters
   M. Calculate the gain coefficient of a laser
   N. Practice and demonstration of skills listed above

LSR-G2-LE1
Investigate Emission and Absorption of Light
Attachment 2: **MASTER** Laboratory Exercise No. 1

Students shall perform the following experiments from ***Introduction to Lasers,*** CORD Communications, Laser Electro-Optics Series, Latest Edition:

a. Line Spectra of Gases;
b. Absorption Spectra of Laser Rods;
c. Exponential Law of Absorption; and,
d. Gain in a Laser.

Successful completion of this technical module will be based on the students' successful completion of the following components:

a. Determine energy of a photon;
b. Perform conversion of energy units;
c. Describe spontaneous absorption of a photon by an atom;
d. Describe spontaneous emission of a photon by an atom;
e. Describe stimulated emission of a photon by an atom;
f. Describe three and four-level laser systems;
g. Explain Doppler broadening of a spectral line;
h. Measure the emission spectra of a gas;
i. Describe three and four-level laser systems;
j. Use the exponential law of absorption;
k. Calculate the optical density of a filter;
l. Use optical filters;
m. Calculate the gain coefficient of a laser; and,
n. Practice and demonstration of skills listed above.

Rules of Conduct

Students must behave in a professional and responsible manner, observing all laser safety rules as outlined in ANSI-Z136.1, *Safe Use of Lasers*.

LSR-G3-HO
Discuss Optical Cavities and Laser Modes
Attachment 1: **MASTER** Handout

Objective(s):

Upon completion of this unit the student will be able to:

a. Determine gain and loss in optical cavities;
b. Discuss cavity configurations;
c. Determine laser modes;
d. Determine laser output spectral distribution;
e. Perform cleaning of optical components; and,
f. Perform alignment of optical cavities.

Module Outline:

I. Discuss Optical Cavities and Modes of Oscillation
   A. Determine gain and loss in optical cavities
   B. Discuss cavity configurations
   C. Determine laser modes
   D. Determine laser output spectral distribution
   E. Perform cleaning of optical components
   F. Perform alignment of optical cavities
   G. Practice and demonstration of skills listed above

LSR-G3-LE1
Discuss Optical Cavities and Laser Modes
Attachment 2: **MASTER** Laboratory Exercise No. 1

Students shall perform the following experiment from ***Introduction to Lasers,*** CORD Communications, Laser Electro-Optics Series, Latest Edition:

a. Cleaning and Alignment of a HeNe Laser.

Successful completion of this technical module will be based on the students' successful completion of the following components:

a. Determine gain and loss in optical cavities;
b. Discuss cavity configurations;
c. Determine laser modes;
d. Determine laser output spectral distribution;
e. Perform cleaning of optical components;
f. Perform alignment of optical cavities; and,
g. Practice and demonstration of skills listed above.

Rules of Conduct

Students must behave in a professional and responsible manner, observing all laser safety rules as outlined in ANSI-Z136.1, *Safe Use of Lasers*.

LSR-G4-HO
Discuss Temporal Characteristics of Lasers
Attachment 1: **MASTER** Handout

Objective(s):

Upon completion of this unit the student will be able to:

a. Discuss the following operating modes for pulsed lasers;
   (1) Normal Pulsed Mode;
   (2) Q-Switched Mode;
   (3) Mode-Locking;
b. Calculate pulse parameters for single- and repetitively-pulsed lasers;
   (1) Pulse duration;
   (2) Pulse width;
   (3) Pulse repetition rate;
   (4) Pulse energy and power;
   (5) Duty cycle;
c. Determine longitudinal coherence length; and,
d. Use etalons for increasing coherence length.

Module Outline:

I. Discuss Temporal Characteristics of Lasers
   A. Discuss the following operating modes for pulsed lasers
      1. Normal Pulsed Mode
      2. Q-Switched Mode
      3. Mode-Locking
   B. Calculate pulse parameters for single- and repetitively-pulsed lasers
      1. Pulse duration
      2. Pulse width
      3. Pulse repetition rate
      4. Pulse energy and power
      5. Duty cycle
   C. Determine longitudinal coherence length
   D. Use etalons for increasing coherence length
   E. Practice and demonstration of skills listed above

LSR-G4-LE1
Discuss Temporal Characteristics of Lasers
Attachment 2: **MASTER** Laboratory Exercise No. 1

Students shall perform the following experiment from ***Introduction to Lasers,*** CORD Communications, Laser Electro-Optics Series, Latest Edition:

a. Measurement of Output Parameters of Pulsed Lasers

LSR-G4-LE2
Discuss Temporal Characteristics of Lasers
Attachment 3: **MASTER** Laboratory Exercise No. 2

Successful completion of this technical module will be based on the students' successful completion of the following components:

a. Discuss the following operating modes for pulsed lasers;
   (1) Normal Pulsed Mode;
   (2) Q-Switched Mode;
   (3) Mode-Locking;
b. Calculate pulse parameters for single- and repetitively-pulsed lasers;
   (1) Pulse duration;
   (2) Pulse width;
   (3) Pulse repetition rate;
   (4) Pulse energy and power;
   (5) Duty cycle;
c. Determine longitudinal coherence length;
d. Use etalons for increasing coherence length; and,
e. Practice and demonstration of stills listed above.

Rules of Conduct

Students must behave in a professional and responsible manner, observing all laser safety rules as outlined in ANSI-Z136.1, *Safe Use of Lasers*.

LSR-G5-HO
Investigate Spatial Characteristics of Lasers
Attachment 1: **MASTER** Handout

Objective(s):

Upon completion of this unit the student will be able to:

a. Explain Transverse Electromagnetic Modes (TEM_{nm});
b. Discuss the generation of the TEM_{00} mode and its properties;
c. Calculate and measure beam divergence;
d. Calculate "diffraction-limited" spot size of a focused beam;
e. Determine the transmission of a beam through an aperture;
f. Determine near- and far-field distances; and,
g. Calculate the irradiance of a focused spot.

Module Outline:

I. Investigate Spatial Characteristics of Lasers
   A. Explain Transverse Electromagnetic Modes (TEM_{nm})
   B. Discuss the generation of the TEM_{00} mode and its properties
   C. Calculate and measure beam divergence
   D. Calculate "diffraction-limited" spot size of a focused beam
   E. Determine the transmission of a beam through an aperture
   F. Determine near- and far-field distances
   G. Calculate the irradiance of a focused spot
   H. Practice and demonstration of skills listed above

LSR-G5-LE1
Investigate Spatial Characteristics of Lasers
Attachment 2: **MASTER** Laboratory Exercise No. 1

Students shall perform the following experiments from ***Introduction to Lasers,*** CORD Communications, Laser Electro-Optics Series, Latest Edition:

a. Beam Diameter by Transmission through an Aperture; and,
b. Beam Diameter by Scanning Beam Profile.

Successful completion of this technical module will be based on the students' successful completion of the following components:

a. Explain Transverse Electromagnetic Modes (TEM_{nm});
b. Discuss the generation of the TEM_{00} mode and its properties;
c. Calculate and measure beam divergence;
d. Calculate "diffraction-limited" spot size of a focused beam;
e. Determine the transmission of a beam through an aperture;
f. Determine near- and far-field distances;
g. Calculate the irradiance of a focused spot; and,
h. Practice and demonstration of skills listed above.

Rules of Conduct

Students must behave in a professional and responsible manner, observing all laser safety rules as outlined in ANSI-Z136.1, *Safe Use of Lasers*.

LSR-G6-HO
Discuss Laser Classifications and Characteristics
Attachment 1: **MASTER** Handout

Objective(s):

Upon completion of this unit the student will be able to:

a. Identify the principle lasing wavelengths for selected lasers;
b. Classify the output pulse duration range for the following modes of operation;
   (1) Mode-Locked;
   (2) Q-switched;
   (3) Repetitively Q-Switched;
   (4) Normal Pulse;
   (5) Continuous-Wave;
c. Identify typical laser power ranges for selected lasers;
d. Define the operating efficiency of a laser;
e. Define the operating characteristics for the following types of lasers;
   (1) Gas Lasers;
   (2) Solid State Lasers;
   (3) Semiconductor Lasers; and,
   (4) Dye Lasers.

Module Outline:

I. Discuss Laser Classifications and Characteristics
   A. Identify the principle lasing wavelengths for selected lasers
   B. Classify the output pulse duration range for the following modes of operation
      1. Mode-Locked
      2. Q-switched
      3. Repetitively Q-Switched
      4. Normal Pulse
      5. Continuous-Wave
   C. Identify typical laser power ranges for selected lasers
   D. Define the operating efficiency of a laser
   E. Define the operating characteristics for the following types of lasers:
      1. Gas Lasers
         a. Nitrogen
         b. HeCd
         c. Argon
         d. HeNe
         e. CO
         f. CO_2

2. Solid State Lasers
   a. Ruby
   b. Nd:Glass
   c. Nd:YAG
3. Semiconductor Lasers
   a. GaAs (single diode)
   b. GaAs (diode array)
4. Dye Lasers
   a. CW - Argon laser pumped
   b. Normal pulsed - flashlamp pumped
   c. Normal pulsed - Nitrogen laser pumped

LSR-G6-LE
Discuss Laser Classifications and Characteristics
Attachment 2: **MASTER** Laboratory Exercise

Successful completion of this technical module will be based on the students' successful completion of the following components:

I. Discuss Laser Classifications and Characteristics;
   A. Identify the principle lasing wavelengths for selected lasers;
   B. Classify the output pulse duration range for the following modes of operation;
      1. Mode-Locked;
      2. Q-switched;
      3. Repetitively Q-Switched;
      4. Normal Pulse;
      5. Continuous-Wave;
   C. Identify typical laser power ranges for selected lasers;
   D. Define the operating efficiency of a laser;
   E. Define the operating characteristics for the following types of lasers;
      1. Gas Lasers;
         a. Nitrogen;
         b. HeCd;
         c. Argon;
         d. HeNe;
         e. CO;
         f. CO_2;
      2. Solid State Lasers;
         a. Ruby;
         b. Nd:Glass;
         c. Nd:YAG;
      3. Semiconductor Lasers;
         a. GaAs (single diode);
         b. GaAs (diode array);
      4. Dye Lasers;
         a. CW - Argon laser pumped;
         b. Normal pulsed - flashlamp pumped; and,
         c. Normal pulsed - Nitrogen laser pumped.

Rules of Conduct

Students must behave in a professional and responsible manner, observing all laser safety rules as outlined in ANSI-Z136.1, *Safe Use of Lasers*.

Laser Machinist .... apply the principles of electronics, lasers, optics, materials, engineering documentation, CAD/CAM, and systems integration to manufacture products following current industry and company standards.

Duties	Tasks												
A Practice Laser Safety	A-1 Discuss laser safety standards	A-2 Discuss basic laser principles	A-3 Discuss laser hazards	A-4 Discuss control measures									
B Apply Mathematical Concepts	B-1 Perform basic mathematical functions	B-2 Perform algebraic functions	B-3 Study exponents and right triangle geometry	B-4 Study elements of plane and solid geometry	B-5 Perform data evaluation and statistical analysis	B-6 Perform proportioning and interpolation	B-7 Perform basic trigonometric calculations	B-8 Investigate vectors and vector systems	B-9 Investigate the Cartesian Coordiante System				
C Perform Measurement and Inspection	C-1 Study basics of metrology	C-2 Select instruments used for measurement	C-3 Study datums and the three plane concept	C-4 Select gauging tools	C-5 Use CMM for location of features	C-6 Perform measurements for orientation tolerances	C-7 Perform measurment by optical comparison	C-8 Perform measurements for circularity, concentricity, runout, and straightness tolerances	C-9 Investigate advanced metrology topics				
D Troubleshoot Industrial Electronics and Control	D-1 Perform DC voltage, current, and power measurements	D-2 Perform AC voltage, current, and power measurements	D-3 Investigate digital logic systems	D-4 Investigate diode applications	D-5 Investigate transistors and thyristors	D-6 Investigate operational amplifiers	D-7 Investigate power supply circuits						
E Apply Concepts of Modern Optics	E-1 Study reflection and refraction at plane surfaces	E-2 Perform imaging with a single lens	E-3 Perform imaging with multiple lenses	E-4 Study F-stops and apertures	E-5 Use laser beam-expanding collimators	E-6 Study interference	E-7 Study diffraction	E-8 Study polarization	E-9 Investigate radiometry and photometry				
F Perform CNC Machining	F-1 Apply machine specific nomenclature and terminology	F-2 Investigate the Cartesian coordinate system as applied to a CNC mill or laser	F-3 Apply CNC programming language	F-4 Perform start up, tool changing, and ending of programs	F-5 Perform positioning and basic drilling	F-6 Create a sub-program	F-7 Perform contouring	F-8 Apply tool radius compensation	F-9 Perform program preparation	F-10 Apply special laser coding parameters			
G Investigate Industrial Laser Systems	G-1 Review characteristics of light	G-2 Investigate emission and absorption of light	G-3 Discuss optical cavities and laser modes	G-4 Discuss temporal characteristics of lasers	G-5 Investigate spatial characteristics of lasers	G-6 Discuss laser classifications and characteristics							
H Perform Computer-Aided Drafting (CAD)	H-1 Discuss and understand PC basics	H-2 Discuss CAD basics and file management	H-3 Use drawing settings	H-4 Perform basic editing commands	H-5 Create drawings with accuracy	H-6 Organize drawing information	H-7 Control the display of drawings	H-8 Use intermediate drawing commands	H-9 Perform intermediate editing commands	H-10 Create multi view drawings	H-11 Create sectioned drawings	H-12 Investigate basic dimensioning	H-13 Perform advanced dimensioning
	H-14 Use and manipulate blocks	H-15 Use blocks to automate the drawing process											
I Perform Laser Materials Processing	I-1 Review laser safety standards	I-2 Discuss lasers used for materials processing	I-3 Discuss laser optics and beam characteristics	I-4 Investigate absorption of laser energy	I-5 Use lasers for welding and surface treatment	I-6 Use lasers for material removal							
J Perform Computer-Aided Manufacturing (CAM)	J-1 Discuss and understand the basics of a PC based CAM system	J-2 Discuss basic CAM operations	J-3 Set up cutting tools	J-4 Create simple part profiles	J-5 Create and edit complex part profiles	J-6 Perform roughing, drilling, and counterboring	J-7 Advanced editing of part profiles	J-8 Edit tool paths	J-9 Use construction layers in SmartCAM	J-10 Perform user commands and machine events	J-11 Create families of parts	J-12 Perform CAD/CAM integration	J-13 Perform code generation

LSR PM6
040698

BEST COPY AVAILABLE

LSR-H1-HO1
Discuss and Understand PC Basics
Attachment 1: **MASTER** Handout No. 1

Objective(s):

Upon completion of this unit the student will be able to:

a. Discuss hardware and software basics;
b. Discuss the DOS and Windows operating systems;
c. Discuss file structure and file management; and,
d. Manipulate and manage files.

Module Outline:

I. Understand PC Basics
   A. Discuss hardware and software basics
   B. Study DOS and windows operating systems
   C. Discuss directory structure
   D. Manipulate and manage files

File Management in AutoCAD

Introduction

Being able to manipulate drawing files well (save, copy, delete backup copies, unlock files) in AutoCAD is one of the most important skills a user can develop.

AutoCAD file types

1. Whenever a drawing is saved in AutoCAD, it has the user-specified filename with a **.dwg** extension.

2. When a user edits a drawing and saves the changes, AutoCAD creates a file with the same filename, but with a **.bak** extension. The **.bak** file is the previously saved copy of the **.dwg** file with the same filename.

3. The user may find that AutoCAD creates a file with the same filename but with a **.dwk** extension assigned to it. This is a protected file called a locked file. If this file is attached to a drawing when the user tries to open the drawing, an error is produced. The user must unlock this file. The procedure for unlocking a drawing file is:
   a. Pick **File** pull-down, then pick **Management**, then pick **Utilities**. The File Utilities dialogue box pops up.
   b. Pick **Unlock file...** from the choice of buttons.
   c. Pick the drive, directory and filename of the file you wish to unlock. *Be sure to select the file with the* **.dwk** *extension! Pick* **OK**.

   The next time you attempt to open your drawing, there should be no lock error.

Opening drawings

Floppy disks should only be used as storage media. **Never open your drawing right from A:!!!** (AutoCAD needs a large amount of disk memory to open a drawing, and if AutoCAD doesn't find the memory, it stamps your drawing with a system error and is UNRECOVERABLE!!!)

File management using File Manager

Copying, deleting and **moving** files as well as **creating subdirectories** in the Windows environment is accomplished easily with the **File Manager** program.

File Manager is located in the **Main** window in Program Manager.

To access **File Manager** from Program Manager, do the following:

1. Double-click the **Main** window icon to open the group window.
2. Double-click the **File Manager** icon to start the program.

Notice that the screen is split into two parts: the left and right.

1. The **left side** of the screen shows the **directory tree**, which is a display of the directories and files on the current disk.
2. The **right side** of the screen displays all of the **files** in the current directory.

Now that File Manager is running, a variety of tasks can be accomplished with just a few clicks of the mouse. File Manager is used to list files on a disk, to copy files from the C: drive to floppies for backup storage, for deleting files from a disk and occasionally for creating subdirectories on disks for better file organization.

Listing files

To list files on a different disk or directory is the same as performing the DIR command in DOS.

1. **Click** the desired disk drive from those available on the third menu bar from the top. If you want to read drive A:, be sure there is a floppy in the drive before clicking the icon.
2. If you want to see the files in a certain directory, **click** that directory from the tree on the left-hand side of the screen.
3. To see all of the file details (date last edited, time last edited, size, etc.):
   a. **Click** the **View** pull-down
   b. **Click All File Details**

Copying files

To copy a file in Windows requires the same general formula as in DOS; you need to specify the current location and filename and the destination location and filename. The steps are as follows:

1. **Click** the file on the right side of the screen so it highlights.
2. Tell File Manager that you want to copy this file. **Click** the **File** pull-down, then pick the **Copy**... command.
3. The Copy dialogue box pops up. At the top, the current path is listed. In the **From** text box is the filename and extension. You don't need to make changes to the information in this text box.
4. File Manager is waiting for you to type in a new path and filename in the **To** text box. **Type** the **new path** (drive name with colon followed by \ and the name of a directory if desired) and the **filename with the extension**. You may change the filename now, but be sure to include the extension.
5. Click **OK**.

Deleting files

To **delete** a file from a disk:

1. **Click** the **drive** and **directory** of the file you wish to delete from the left side of the screen.
2. **Click** the filename so it highlights on the right side of the screen.
3. **Click File** pull-down and then **Delete...** . The **Delete** dialogue box pops up.
4. If the file you want to delete is listed, click **OK**. If not, click **Cancel**.
5. File Manager will ask for a **confirm** of the delete. If you really want to delete the file, click **Yes**. If not, click **Cancel**.

LSR-H1-LE
Discuss and Understand PC Basics
Attachment 3: **MASTER** Laboratory Exercise

Successful completion of this technical module will be based on the students' successful completion of the following components:

1. Discuss and understand the hardware and software basics of the AutoCAD system;
2. Discuss and understand DOS and windows operating systems;
3. Discuss and understand directory structure; and,
4. Manipulate and manage files.

LSR-H2-HO1
Discuss CAD Basics and File Management
Attachment 1: **MASTER** Handout No. 1

Objective(s):

Upon completion of this unit the student will be able to:

a. Save files in CAD (SAVE, SAVE AS, AUTOSAVE);
b. Study drawing editor, menu structure;
c. Perform basic DRAW commands (LINE, CIRCLE);
d. Study how to enter new points (Coordinate entry); and,
e. Perform basic EDIT command (ERASE).

Note: AutoCAD commands are in caps.

Module Outline:

I. Discuss CAD Basics and File Management
   A. Save files in CAD (SAVE, SAVE AS, AUTOSAVE)
   B. Study drawing editor, menu structure
   C. Perform basic DRAW commands (LINE, CIRCLE)
   D. Study how to enter new points (Coordinate entry)
   E. Perform basic EDIT command (ERASE)

Drawing Management Techniques; Saving Files

The windows discussion provides a good segue to present proper file management techniques. The **Save...** and **Save As...** commands in AutoCAD can be very tricky for new users to grasp, especially if the lab is using a network copy of AutoCAD. To avoid locking of files, we have set up a **TEMP** subdirectory on each computer C: hard drive and issue the following mandate:

OPENING DRAWINGS

ALWAYS OPEN AN AUTOCAD DRAWING FROM THE HARD DRIVE (C:\TEMP).* Never open a drawing from the A: drive. (Floppies should be used as storage media only.)

*If a file is not on the hard drive, use File Manager to copy the file from the floppy to the hard drive.

SAVING DRAWINGS

SAVE WORK OFTEN AND ALWAYS TO THE COMPUTER HARD DRIVE (C:\TEMP). Never save an open AutoCAD drawing directly to the floppy disk.**

**Use File Manager to copy files from the hard drive to both floppies. Yes, two floppies. Each should contain the most recent version of the drawing.

By forcing students to open drawings from the hard drive, the working directory is the hard drive. AutoCAD runs faster because it looks to the fast-spinning hard drive rather than the slow-spinning floppy when it needs to reference the disk.

Students discover very early on in the course that it is possible to open drawings from the floppy disk. Most AutoCAD books address opening drawings directly from the floppy. The problem students encounter with opening drawings from the floppy is that AutoCAD needs at least 300,000 bytes of memory to open the drawing, even for the smallest of drawings. If the floppy is full, AutoCAD stamps the drawing with a system error, rendering it unrecoverable. If the student was using proper file management techniques, that's not a problem. The student has another copy of that drawing on his/her other disk. Hopefully, students will get the message that floppies are cheap - time is very "expensive"!

Students also learn that it is possible to save drawings to the floppy within AutoCAD. The problem with saving an open AutoCAD drawing directly to the floppy is that the floppy is now the last referenced disk. Often students will swap floppies to save the drawing to a backup disk. The first floppy's drawing is now left "open." It is locked. While the drawing can be unlocked easily using **File Utilities**, students feel very frustrated by locked drawings. Students who insist on saving drawings directly to the floppy need to pay close attention to the location of the last reference.

LSR-H2-HO3
Discuss CAD Basics and File Management
Attachment 3: **MASTER** Handout No. 3

Getting Acquainted with AutoCAD

Start AutoCAD

1. Introduce the layout of the graphics window - title bar, toolbars, screen menu, command lines, pull-down menus, graphics area, UCS icon.
2. Emphasize that like AutoCAD commands are grouped together in pull-down menus or toolbars (i.e., commands for drawing objects are found on the Draw toolbar).
3. Discuss keys, buttons, functions and terminology.
4. Review the actions of a two button mouse:
   a. Left = "click" (activates a command from pull-down or toolbar, picks a point on the screen)
   b. Right = "enter" (same as Enter on keyboard)
   c. Double-click left = "open" (seldom used in AutoCAD)
4. Discuss similarities with other Windows-based applications in terms of object behaviors. For example, pull-down menus work the same way, whether the application is AutoCAD or Word. Pull-down menus are all activated with a pick of the menu title. To close a menu without picking a command, the user picks the menu title or anywhere not on the menu itself. Other examples: windows (and toolbars) may be moved by pick+hold on the window title; windows may be resized by sliding the pointer to the border of the window and using the two-sided arrow to change size.

In this session, it is not important that students know how to use AutoCAD commands. The goal of this session is to liken the AutoCAD graphics window tools to the manual drafter's tools.

Manual Drafting	Computer-Aided Drafting
Desktop	Graphics area
Paper	**LIMITS** command, displays as grid
Eraser	**ERASE** command, other **Modify** commands
Pencil	**Draw** commands
T-square, etc.	**Ortho** mode toggle key

LSR-H2-LE
Discuss CAD Basics and File Management
Attachment 4: **MASTER** Laboratory Exercise

Successful completion of this technical module will be based on the students' successful completion of the following components:

1. Using the Save commands in AutoCAD (SAVE, SAVE AS, AUTOSAVE);
2. Understanding and discussing the drawing editor and menu structure;
3. Perform basic DRAW commands (LINE, CIRCLE);
4. Understand and use Coordinate entry to create points for lines and circles; and,
5. Use the most basic EDIT command (ERASE).

LSR-H3-HO1
Use Drawing Settings
Attachment 1: **MASTER** Handout No. 1

Objective(s):

Upon completion of this unit the student will be able to:

a. Perform drawing sheet set-up using LIMITS;
b. Establish the drawing UNITS;
c. Set up a GRID;
d. Use ORTHO to create horizontal and vertical cursor movements;
e. Use SNAP to move from fixed point to fixed point;
f. Set up drawing aids using DDRMODES; and,
g. Discuss ANSI sheet sizes and apply as prototype drawings.

Note: AutoCAD commands are in caps.

Module Outline:

I. Use Drawing Settings
   A. Perform drawing sheet set-up using LIMITS
   B. Establish the drawing UNITS
   C. Set up a GRID
   D. Use ORTHO to create horizontal and vertical cursor movements
   E. Use SNAP to move from fixed point to fixed point
   F. Set up drawing aids using DDRMODES
   G. Discuss ANSI sheet sizes and apply as prototype drawings

Create ASIZE.DWG and BSIZE.DWG Prototypes

Create two AutoCAD drawing files in accordance with ANSI standards for sheet sizes. The ASIZE.DWG file has the border and title block for the A size sheet. Create the title block as a block with attributes. Layer 0 only. The BSIZE.DWG file should contain the border and title block for a B size sheet. Create the title block as a block with attributes. Layer 0 only. Save these files to a network drive or make available on floppy disk so students may have access to them for new drawing setup.

Standard Sheet Sizes

Discuss good engineering drawing setup.

- Sheet sizes A through E
- Border sizes
- Title block sizes

Explain that A size and B size drawings have been created for students to use, complete with correct sheet size, border and title block. The filenames are ASIZE.DWG and BSIZE.DWG. The instructor should copy these drawings into a directory where students have access rights. A subdirectory on a network drive would be ideal.

LSR-H3-HO3
Use Drawing Settings
Attachment 3: **MASTER** Handout No. 3

Introduction to Drawing Aids

The aids which help the user control the mouse, layout the drawing and ensure accuracy are referred to as drawing aids. They are **GRID**, **SNAP** and **ORTHO**.

Establishing a Grid on the Screen

The grid is a pattern of dots which helps the user define the paper and layout the drawing. Key points:

- Grid visible only on screen - does not plot
- **F7 key** toggles grid **On/Off**
- Changing grid spacing

Setting Increments for Cursor Movement

The snap grid controls cursor movement. Emphasize the snap grid controls cursor movement, but that grid is only a visual aid. Key points:

- Setting the snap increment with **SNAP** command
- Setting grid spacing relative to snap spacing
- **F9** key toggles grid **On/Off**

Using the Pull-Down Menu to Set Drawing Aids

The aforementioned drawing aides may be accessed through a graphical user interface called the **Drawing Aids** dialog box. Key points:

- Accessing the **Drawing Aids** dialog box **(DDRMODES)**

Note: It is important to realize that **SNAP** is a rudimentary command and that its use should be discouraged once object snaps and the three point entry methods are introduced.

Using a Prototype Drawing

To start a new drawing using the ASIZE.DWG prototype

1. Pick **File** pull-down menu
2. Pick **New...**
3. Pick the **Prototype...** button in the **Create New Drawing** dialog box. Use the ASIZE.DWG prototype from the appropriate directory.
4. Name the drawing as appropriate.
5. Pick **OK** to close the dialog box.

Editing the Title Block

The title block for each drawing should be filled in with as much information as is known. At the very least, the initials of the person who created the drawing, the date, the scale of the drawing and the drawing title should be included. ***Use uppercase text.***

The **DDATTE** command must be used to place text in the title block. The title block was created with special properties which facilitate the process of placing in the title block. These special text properties are called attributes, and will be covered at a later date.

Using the **DDATTE** command:

1. Type **DDATTE** at the **Command:** prompt
2. Pick any piece or text or line on the title block
3. Hit **Enter**. The **Edit Attributes** dialog box appears.
4. Move the cursor to the text box, pick in the box and type in appropriate text.
5. Pick **OK** when finished. If **Cancel** is picked, no changes are made.

LSR-H3-LE
Use Drawing Settings
Attachment 5: **MASTER** Laboratory Exercise

Successful completion of this technical module will be based on the students' successful completion of the following components:

a. Create the drawing sheet size by using LIMITS;
b. Establish the drawing UNITS;
c. Discuss the use of, and set up a GRID;
d. Use ORTHO to create horizontal and vertical cursor movements;
e. Use SNAP to move from fixed point to fixed point;
f. Set up drawing aids using DDRMODES; and,
g. Understand and use an ANSI prototype drawing.

LSR-H4-HO
Perform Basic Editing Commands
Attachment 1: **MASTER** Handout

Objective(s):

Upon completion of this unit the student will be able to:

a. Discuss how to group objects for editing using:
   (1) Window;
   (2) Crossing Window;
   (3) Remove and Add;
   (4) Last and Previous;
   (5) Fence;

b. Perform modifications and changes to objects on screen using:
   (1) COPY;
   (2) MOVE;
   (3) FILLET; and,
   (4) CHAMFER.

Note: AutoCAD commands are in caps.

Module Outline:

I. Perform Basic Editing Commands
   A. Discuss how to group objects for editing
      1. Window
      2. Crossing Window
      3. Remove and Add
      4. Last and Previous
      5. Fence
   B. Perform modifications and changes to objects on screen using:
      1. COPY
      2. MOVE
      3. FILLET
      4. CHAMFER

Successful completion of this technical module will be based on the students' successful completion of the following components:

a. Select objects on the screen using the options of:
   (1) Window;
   (2) Crossing Window;
   (3) Remove and Add;
   (4) Last and Previous;
   (5) Fence;

b. Create and modify objects on screen using:
   (1) COPY;
   (2) MOVE;
   (3) FILLET; and,
   (4) CHAMFER.

LSR-H5-HO
Create Drawings with Accuracy
Attachment 1: **MASTER** Handout

Objective(s):

Upon completion of this unit the student will be able to:

a. Draw with object snap enabled (OSNAP and DDOSNAP);
b. Determine the accuracy of a drawing using:
   (1) DIST;
   (2) LIST; and,
   (3) ID.

Note: AutoCAD commands are in caps.

Module Outline:

I. Create Drawings with Accuracy
   A. Draw with object snap enabled (OSNAP, DDOSNAP)
   B. Determine the accuracy of a drawing using:
      1. DIST
      2. LIST
      3. ID

Successful completion of this technical module will be based on the students' successful completion of the following components:

a. Draw figures using all of the object snap modes;
b. Obtain data concerning a drawing using:
   (1) DIST;
   (2) LIST; and,
   (3) ID.

LSR-H6-HO
Organize Drawing Information
Attachment 1: **MASTER** Handout

Objective(s):

Upon completion of this unit the student will be able to:

a. Perform layer creation (LAYER, DDLMODES);
b. Study and identify line styles;
c. Load and use linetypes;
   (1) LINETYPE;
   (2) LTSCALE;
d. Change properties of objects;
   (1) CHANGE;
   (2) CHPROP; and,
   (3) DDMODIFY.

Note: AutoCAD commands are in caps.

Module Outline:

I. Organize Drawing Information
   A. Perform layer creation (LAYER, DDLMODES)
   B. Study and identify line styles
   C. Load and use linetypes
      1. LINETYPE
      2. LTSCALE
   D. Change properties of objects
      1. CHANGE
      2. CHPROP
      3. DDMODIFY

Successful completion of this technical module will be based on the students' successful completion of the following components:

a. Create and use layers;
b. Discuss and identify line styles;
c. Load linetypes and control their display;
   (1) LINETYPE;
   (2) LTSCALE;
d. Change the properties of objects on the screen;
   (1) CHANGE;
   (2) CHPROP; and,
   (3) DDMODIFY

Students will observe and participate in the discussion of the topics listed above. Following the demonstrations, students will:

a. Update the ASIZE.DWG prototype to include mechanical layers

b. Open the drawing and create layers assigned by the instructor. Assign the layers the following colors and linetypes:

LAYER	COLOR	LINETYPE
OBJ	yellow	continuous
HID	red	hidden
CEN	green	center
DIM	magenta	continuous
CONS	magenta	continuous
HAT	cyan	continuous
BOR	blue	continuous

c. Change the layer of all of the entities which make up the border and title block to **BOR**.

d. Save this drawing.
(This modified drawing will be used on all future drawings which call for an A size setup.)

e. Update the BSIZE.DWG prototype to include mechanical layers using the layer color and linetype scheme listed above.

f. Change the layer of the border and titleblock to BOR and save the drawing.
(This modified drawing will be used on all future drawings which call for the B size setup.)

LSR-H7-HO
Control the Display of Drawings
Attachment 1: **MASTER** Handout

Objective(s):

Upon completion of this unit the student will be able to:

a. Change magnification of objects (ZOOM Window, Previous, All, Extents, Dynamic);
b. Move the display area (PAN);
c. Plot drawings to a printer (PLOT); and,
d. Plot drawings to a plotter (PLOT).

Note: AutoCAD commands are in caps.

Module Outline:

I. Control the Display of Drawings
   A. Change magnification of objects (ZOOM Window, Previous, All, Extents, Dynamic)
   B. Move the display area (PAN)
   C. Plot drawings to a printer (PLOT)
   D. Plot drawings to a plotter (PLOT)

LSR-H7-LE
Control the Display of Drawings
Attachment 2: **MASTER** Laboratory Exercise

Successful completion of this technical module will be based on the students' successful completion of the following components:

a. Discuss and use ZOOM with Window, Previous, All, Extents, Dynamic, etc. to change the magnification of objects;
b. Discuss and use PAN to move the display area; and,
c. Discuss the setup and requirements necessary to plot drawings to a printer or plotter (PLOT).

LSR-H8-HO
Use Intermediate Drawing Commands
Attachment 1: **MASTER** Handout

Objective(s):

Upon completion of this unit the student will be able to:

a. Make parallel copies of objects (OFFSET);
b. Make multiple copies of objects (Multiple COPY, Rectangular and Polar ARRAY);
c. Create arcs (ARC);
d. Create text on the drawing (TEXT, DTEXT, STYLE);
e. Create center marks and center lines (DIM, CENTER);
f. Draw an ellipse (ELLIPSE); and,
g. Draw polygons (POLYGON & RECTANGLE).

Note: AutoCAD commands are in caps.

Module Outline:

I. Use Intermediate Drawing Commands
   A. Make parallel copies of objects (OFFSET)
   B. Make multiple copies of objects
      1. Multiple COPY
      2. Rectangular and Polar ARRAY
   C. Create arcs (ARC)
   D. Create text on the drawing
      1. TEXT
      2. DTEXT
      3. STYLE
   E. Create center marks and center lines (DIM, CENTER)
   F. Draw an ellipse (ELLIPSE)
   F. Draw polygons (POLYGON & RECTANGLE)

Successful completion of this technical module will be based on the students' successful completion of the following components:

a. Make parallel copies of objects using OFFSET;
b. Make multiple copies of objects using Multiple COPY and Rectangular and Polar ARRAYs);
c. Create arcs using the ARC command;
d. Create text with an appropriate font using TEXT, DTEXT, and STYLE;
e. Create center marks and center lines using DIM and CENTER;
f. Draw an ellipse using ELLIPSE; and,
g. Draw polygons using the POLYGON & RECTANGLE commands.

Students will observe and participate in the discussion of the topics listed above. Following the demonstrations, students will complete the following lab work:

a. **Revise ASIZE.DWG and BSIZE.DWG prototype drawings to include ROMANS text style;**
(Open each drawing and create the text style. Be sure to save over the old copy of the drawing.)

b. **Create CSIZE.DWG and DSIZE.DWG;**
Use the settings assigned by the instructor to draw the border and title block for each prototype. Include layers, colors and linetypes as well as the ROMANS text style.

c. For all drawings, use the new A size prototype; and,

d. Create one hex nut; then use Rectangular Array to create the other three.

LSR-H9-HO
Perform Intermediate Editing Commands
Attachment 1: **MASTER** Handout

Objective(s):

Upon completion of this unit the student will be able to:

a. Mirror objects (MIRROR);
b. Rotate objects (ROTATE);
c. Scale objects (SCALE);
d. Change the length of existing objects;
   (1) STRETCH;
   (2) EXTEND;
   (3) TRIM;
   (4) BREAK;
e. Edit text (DDEDIT); and,
f. Perform automatic editing using the noun-verb format (GRIPS).

Note: AutoCAD commands are in caps.

Module Outline:

I. Perform Intermediate Editing Commands
   A. Perform mirror images of objects (MIRROR)
   B. Perform rotations on objects (ROTATE)
   C. Perform scaling of objects (SCALE)
   D. Change the length of existing objects
      1. STRETCH
      2. EXTEND
      3. TRIM
      4. BREAK
   E. Perform text editing (DDEDIT)
   F. Study the use of automatic editing using the noun-verb format (GRIPS)

ERIC

Successful completion of this technical module will be based on the students' successful completion of the following components:

a. Perform mirroring of objects;
b. Perform rotations on objects;
c. Perform scaling of objects;
d. Change the length of existing objects using;
   (1) STRETCH;
   (2) EXTEND;
   (3) TRIM;
   (4) BREAK;
e. Perform text editing; and,
f. Perform automatic editing using the noun-verb format (GRIPS).

LSR-H10-HO
Create Multi View Drawings
Attachment 1: **MASTER** Handout

Objective(s):

Upon completion of this unit the student will be able to:

a. Demonstrate an understanding of 3rd angle projection;
b. Create and place appropriate orthogonal views;
c. Draw construction lines from one view to create other views; and,
d. Use existing geometry to place other views (POINT FILTERS).

Note: AutoCAD commands are in caps.

Module Outline:

I. Create Multiview Drawings
   A. Study the concept of third angle projection
   B. Create and place appropriate orthogonal views
   C. Draw construction lines from one view to create other views
   D. Use existing geometry to place other views (POINT FILTERS)

LSR-H10-LE
Create Multi View Drawings
Attachment 2: **MASTER** Laboratory Exercise

Successful completion of this technical module will be based on the students' successful completion of the following components:

a. Demonstrate an understanding of 3rd angle projection;
b. Create and place appropriate orthogonal views;
c. Draw construction lines from one view to create other views; and,
d. Use existing geometry to place other views (POINT FILTERS).

LSR-H11-HO
Create Sectioned Drawings
Attachment 1: **MASTER** Handout

Objective(s):

Upon completion of this unit the student will be able to:

a. Demonstrate an understanding of section views;
b. Create section lines and hatch patterns on a drawing;
   (1) PLINE;
   (2) HATCH; and,
   (3) BHATCH.

Module Outline:

I. Create Sectioned Drawings
   A. Discuss and identify section views
   B. Create section lines and hatch patterns on a drawing
      1. PLINE
         Note: PLINE may be used to create section borders and cutting-plane lines
      2. HATCH
      3. BHATCH

LSR-H11-LE
Create Sectioned Drawings
Attachment 2: **MASTER** Laboratory Exercise

Successful completion of this technical module will be based on the students' successful completion of the following components:

a. Demonstrate an understanding of section views;
b. Create section lines and hatch patterns on a drawing using:
   (1) PLINE;
   (2) HATCH; and,
   (3) BHATCH.

LSR-H12-HO
Investigate Basic Dimensioning
Attachment 1: **MASTER** Handout

Objective(s):

Upon completion of this unit the student will be able to:

a. Study methods for dimensioning objects (DIM); and,
b. Apply methods for changing dimension settings (DIMVARS).

Note: AutoCAD commands are in caps.

Module Outline:

I. Investigate Basic Dimensioning
   A. Study methods for dimensioning objects (DIM)
      1. Introduction
      2. Linear dimensions
      3. Aligned dimensions
      4. Angular dimensions
      5. Chain and datum dimensioning
      6. Dimensioning circles
      7. Dimensioning arcs
   B. Apply methods for changing dimension settings (DIMVARS)

LSR-H12-LE
Investigate Basic Dimensioning
Attachment 2: **MASTER** Laboratory Exercise

Successful completion of this technical module will be based on the students' successful completion of the following components:

a. Demonstrate an understanding for dimensioning objects (DIM); and,
b. Apply methods for changing dimension settings (DIMVARS).

LSR-H13-HO1
Perform Advanced Dimensioning
Attachment 1: **MASTER** Handout No. 1

Objective(s):

Upon completion of this unit the student will be able to:
a. Create and use Dimension Styles (DDIM); and,
b. Apply geometric dimensioning from ANSI Y14.5.

Note: AutoCAD commands are in caps.

Module Outline:

I. Perform Advanced Dimensioning
   A. Create and use dimension styles (DDIM)
   B. Apply geometric dimensioning from ANSI Y14.5

Three views of Index Feed

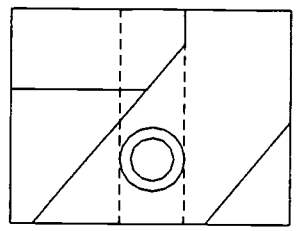

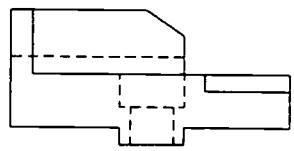

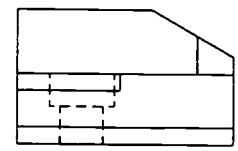

Dimensioning Tutorial

This tutorial will dimension the index feed. All the appropriate standards per ANSI Y14.5 will be applied. We will create parent and child dimension styles and use AutoCAD's dimensioning commands to develop a professional drawing. Read in the file which contains the three views of the index slide.

Preparing for dimensioning:

1. Create center lines for all circular features in plan views. If there are a group of concentric circles (e.g., drill and counterbore), always create the center lines using the largest diameter circle.
2. Create a center line for all cylindrical features in front and side views.
3. Ensure the text style Roman Simplex is used. Do not used Standard text. It is ugly!

Some dimensioning basics:

1. **Every dimension has a tolerance**. If the tolerance is not stated as part of the dimension (such as the .750 - .745 dimension for the Index Slide), the tolerance is defined in the title block. Realize that the number of decimal points indicates tolerance. In the title block we will use, it is stated that two decimal places indicates _.03 and three decimal places indicates _.010. The title block also states that zero decimal places indicates an angle at _1°.
2. For decimals less than 1.000, NO lead in zero is used.
3. All dimensions must be OFF the part.
4. Never dimension to a hidden line or the center line of a hidden feature.
5. Whenever possible, place the dimension in the view which shows the dimensioned feature as an edge.
6. Diameter leader lines pointing at a circle(s) must be placed such that if the leader was continued, it would pass through the center of the circle.
7. Always show a visible gap between the extension line and the object. However, when using center lines for extension lines NO GAP is used.
8. Never ruin center lines by running dimension extension lines through circles.

Using AutoCAD dimension styles:

The AutoCAD dimension styles are used to set up dimensioning parameters to handle the look and placement of all the part's dimensions. The dimensioning style

will also be used for creating center lines for circular features. Look at the Index Feed: there are fourteen (14) linear dimensions, three (3) angular dimensions, one (1) dimension needing a special tolerance, and one (1) hole note.

Center lines are needed in all three views: in the top view, the drill and counterbore is a circular feature, while in the front and side views, they are cylindrical features.

We have been required to dimension this part for _.010. Therefore, all our dimensions will contain three decimal places as dictated by our title block. We will dimension the angles at _1°, therefore, zero decimal places will be needed.

We will need three styles for our task: a style called "Main," one called "Centerlines" and one called "750-745-tol." These three styles will handle all the dimensioning requirements.

First, however, let's establish the correct text style. Data → Text Style → Type Romans <enter> → select the font file ROMANS.SHX and OK the dialog box → accept all defaults until the Command: line is reached. Romans (or roman simplex) is now the style.

Creating the centerline style and placing center lines on the drawing

First, let's create a dimension style for our center lines needed in the top view. Get the dimensioning toolbar: Tools → Toolbars → Dimensioning. The last icon is the Dimension styles. Select this icon and enter the dimension styles dialog box. There is always a standard style given. Where the style is listed next to the word "Name:" highlight the word STANDARD, type centerlines, then click the "Save" button. You should have a message: "Created CENTERLINES from STANDARD".

Centerlines will be a Parent style with no children. Note that there are three areas for setting: Geometry, Format, and Annotation. (These dialog box are shown in appendix D.) Enter Geometry. In the dialog box:

Center: "Line" should be on
Size: Should be .05
Leave all other values at their default
OK

Click on Save to save this setting and OK the dim styles dialog box.

Now, we will place the center lines on the circular features in the top view. Make sure the current layer is "Cen". Click on the center mark icon (the 8th icon). For **"Select arc or circle"** pick the largest circle, the counter bore. The centerlines appear.

Use the line command to create the vertical center lines required in the front and side views. Note that the lines must extend beyond the feature. Typically, I will draw a line selecting an appropriate line of the feature to use for mid point (in the front view, the hidden line representing the bottom of the counterbore works fine). Then, turn on ORTHO and stretch out the line. Use grips as appropriate to position and/or stretch the centerline. Then, copy this line to the side view to ensure compatibility of size and position.

You should have figure 1.

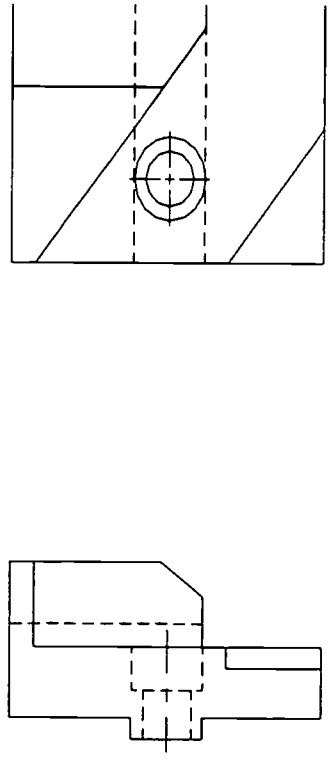

Figure 1

Creating the style Main and placing dimensions on the drawing

We will now create a parent dimension style called Main. In this parent style we will have three children: Linear, Diameter, and Angular.

Let's first set up the Parent style. Set the style STANDARD as the current style. Where the style is listed next to the word "Name:" Highlight the word STANDARD, type Main, then click the "Save" button. You should have a message: "Created MAIN from STANDARD".

Note that there are three areas for setting: Geometry, Format, and Annotation. Enter Geometry. In the dialog box:

Dimension Line: "Spacing" should be .625
Arrowheads: "Size" should be 5/32
Extension Line: "Origin Offset" should be .09
Leave all other values as their default.
OK

Some explanations, the dimension line spacing is the spacing of dimensions when baseline is used. The arrowhead and text size will be the ANSI preferred 5/32. Origin Offset is the gap between the extension line and the object. If a tangential edge is dimensioned, the .09 works better than the default .0625.

Next go into Format. In the dialog box:
Leave all values at their default
OK

Next, go into annotation. In the dialog box:
Primary Units: Click on "Units". A sub-dialog box comes up:
Units: Decimal
Dimension: "Precision" should be three decimal places.
Zero Suppression: "Leading" should be "x" indicating on.
Angles and tolerance will be set later
OK
Text: Style should be ROMANS
Height: 5/32
Gap: .05
Accept all other default values.
OK

Back at the first dialog box, Click on Save to save our settings for the dimension parent style of Main.

Creating the children: Linear, diameter, and angular

Return to the dimension style main dialog box if you are not already there. Make sure the style Main is current. ***For our linear child,*** simply click on "Linear" and then "Save". The settings that were used for the Parent all apply to linear dimensions without any other changes.

Return to the dimension style main dialog box if you are not already there. Make sure the style Main is current. ***For our diameter child,*** click on "Diameter".

Click on Geometry. In the dialog box:
Center Mark: Should be "None" (We will use a separate style to create center lines)

Leave all other values at their default
OK

Click on Format. In the dialog box:
Click on "User Defined"
Fit: Should be "Arrows only" (These settings allow us to dimension diameters as leaders)
OK

There is no need to enter Annotation. The settings will not change from the parent. From the main dimension styles dialog box, click on save to save our diameter child settings.

Return to the dimension style main dialog box if you are not already there. Make sure the style Main is current. ***For our angular child,*** click on "Angular".

There will be no changes to Geometry or Format.

Go into annotation. In the dialog box:
Primary Units: Click on "Units". A sub-dialog box comes up:
Angles: Decimal Degrees
Dimension: "Precision" should be no decimal places.
OK
Accept all other default values.

IMPORTANT: Do not confuse Tolerance precision with Dimension precision. Just because tolerance precision is under Angles, it is easy to enter the decimal precision in the wrong area. Again, Angle decimal places are set under Dimension precision NOT Tolerance precision.

OK

From the main dimension styles dialog box, click on save to save our angular child settings.

This parent child system works as follows. When the parent style "Main" is the current dimension style, any linear dimension placed on the drawing follows the settings for the linear child. When an angular dimension is placed on the drawing, the settings for the angular child are used automatically. And when a diameter dimension is placed on the drawing, the settings for the diameter child are used automatically. Make sure, in the dimension styles dialog box, MAIN is the current setting.

Let's go to work: Top view dimensions

Let's start by dimensioning the .750 height to the drill/counterbore centerline and the 2.5 overall.

In the dimension toolbar, click on the first icon (linear dimensions):

First extension line origin or RETURN to select: select the end point (or intersection) of the lower left corner
Second extension line origin: select the midpoint of the drill/counterbore centerline
Dimension line location (Text/Angle/Horizontal/Vertical/Rotated): Place the dimension in an appropriate position

We will use baseline to get the 2.500 overall. Select the baseline icon (the 6th icon):

Second extension line origin or RETURN to select: select the endpoint of the upper left corner of the object

The 2.500 dimension appears (the spacing of .625 from the first dimension was established in the dimension style).

<enter> twice to get back to the command line. You now have figure 2.

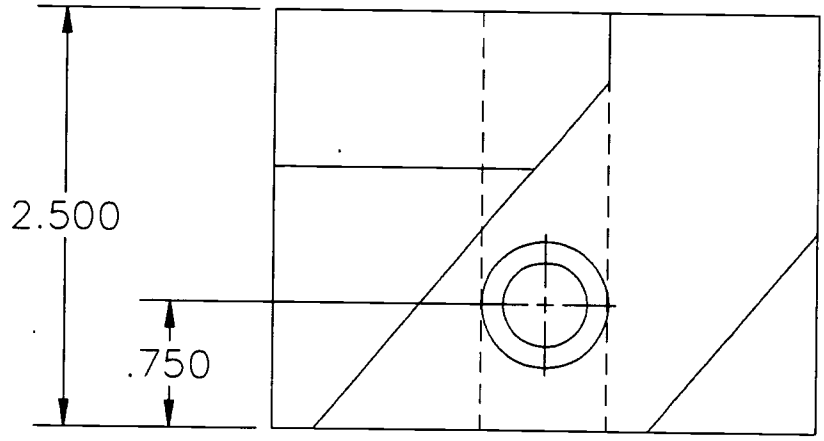

Figure 2

Note that there are visible gaps for the extension lines except for where the centerline is used. This was the reason for using "midpoint" when creating the .750 dimension.

Let us now continue with this view and add four more dimensions. Although the .250 and 1.000 dimensions would be in a plan view, there is no other view which shows these features on edge. Therefore, we will use the top view for both. Also, we will dimension the distance from edge to the center of the drill/counterbore and the 3.25 overall. The dimension style is already set so let's go. First, the .250. Select the linear icon (the 1st icon) from the dimension toolbar. Use the appropriate endpoints and place the .250 dimension in a reasonable location. Now the 1.630 for the drill/counterbore location. Select the baseline icon, and select the midpoint of the centerline. The 1.630 places itself. The baseline command is still active, therefore, select the endpoint of the object at the lower right corner and the 3.250 dimension appears. <enter> twice to end the command. For the 1.000 dimension, use the first icon (linear) and the appropriate endpoints to get this dimension. You should place the 1.000 dimension in line with the .250. You now have figure 3.

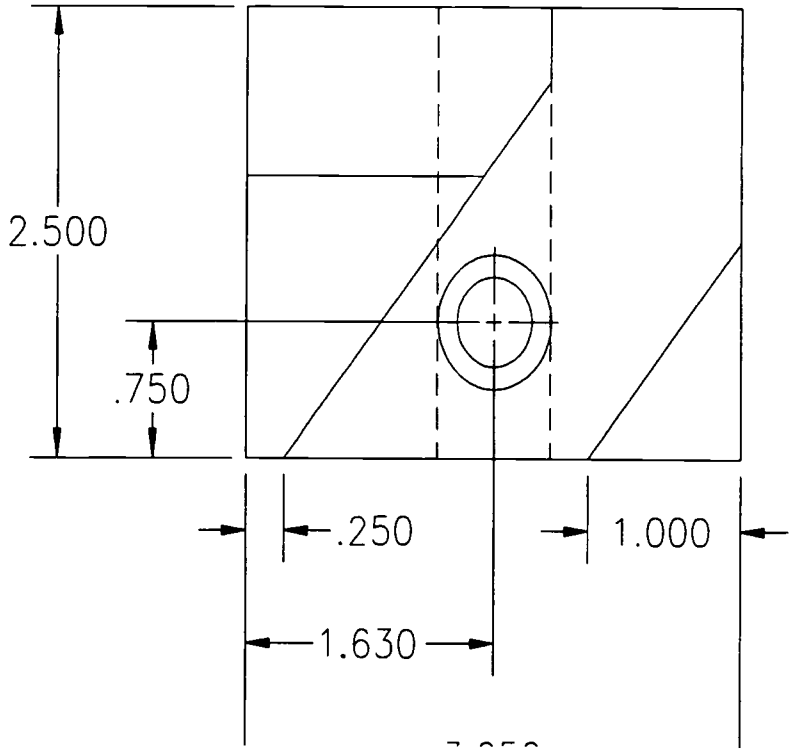

Figure 3

Let's now get the angles in place. Again, there is no need to disturb our dimension style setting. The parent Main is prepared to handle the child angular upon

placement of the dimension. Let's do the 50° angle first. Select the angle icon from the dimension toolbar (the 4th icon):

Select arc, circle, line, or RETURN:
Select the bottom horizontal line of the object.
Second line: select the angled line for the 50°
Dimension arc line location (Text/Angle): Place the text in an appropriate location OFF the part.

Repeat the procedure selecting the appropriate lines to generate the 40° angle. You now have figure 4.

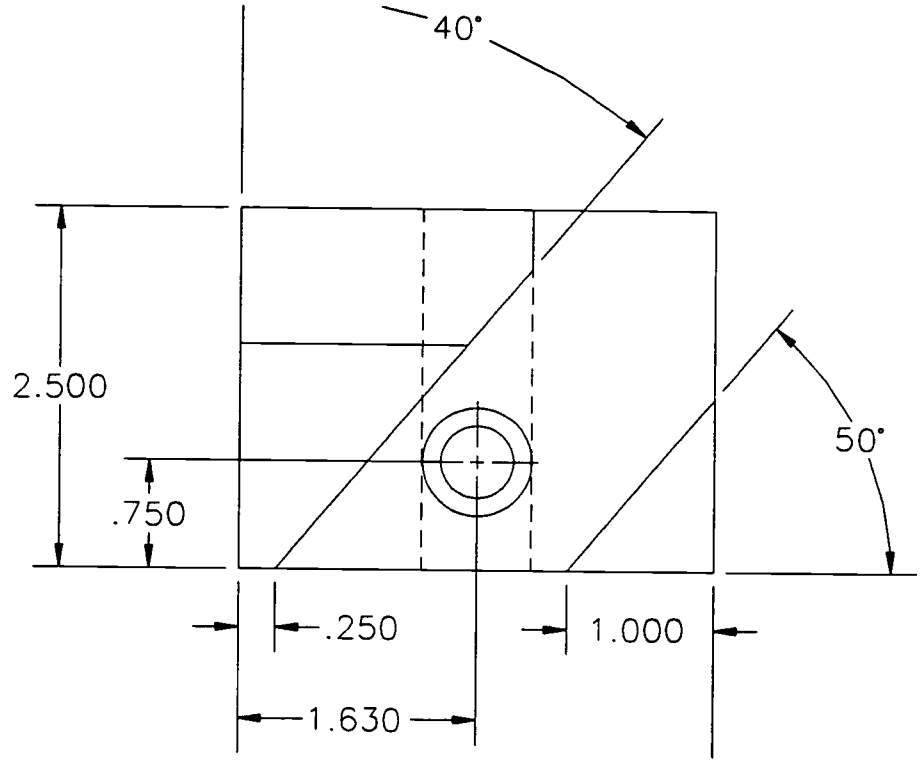

Figure 4

The top view is almost ready. We will now do the hole note. Our leader must point to the largest diameter even though the note begins with the hole diameter. This is best handled by initially dimensioning the counter bore as a diameter. This creates the leader with the proper orientation of pointing to the center of the feature. Then we will perform a text change to list the drill diameter first. We will then follow up with the DTEXT command to add the counterbore data.

Again, our MAIN dim style is prepared to handle the diameter dimensioning.

Select the diameter dimensioning icon from the dimensioning toolbar. The diameter dimensioning icon is a flyout of the radius dimensioning icon (the 3rd icon).

Select arc or circle: Select the counterbore circle

Dimension line location (Text/Angle): T <enter> and the MTEXT dialog box appears (shown in appendix D, last page). Delete the "<>" representing the default text and type in %%c.500

OK the dialog box.

Dimension line location (Text/Angle): Place in a reasonable location. Now, let's finish the note with the counterbore data. Select DTEXT from the Draw toolbar. It is a flyout of the TEXT icon (the last icon).

For Start point: Select a point to align with the hole data.

Height <0.2000>: 5/32

Rotation angle <0>: <enter>

Text: CBORE %%C.750 DEPTH .380 (Note: all capital letters are used).

Text: <enter> to finish the command. You now have figure 5.

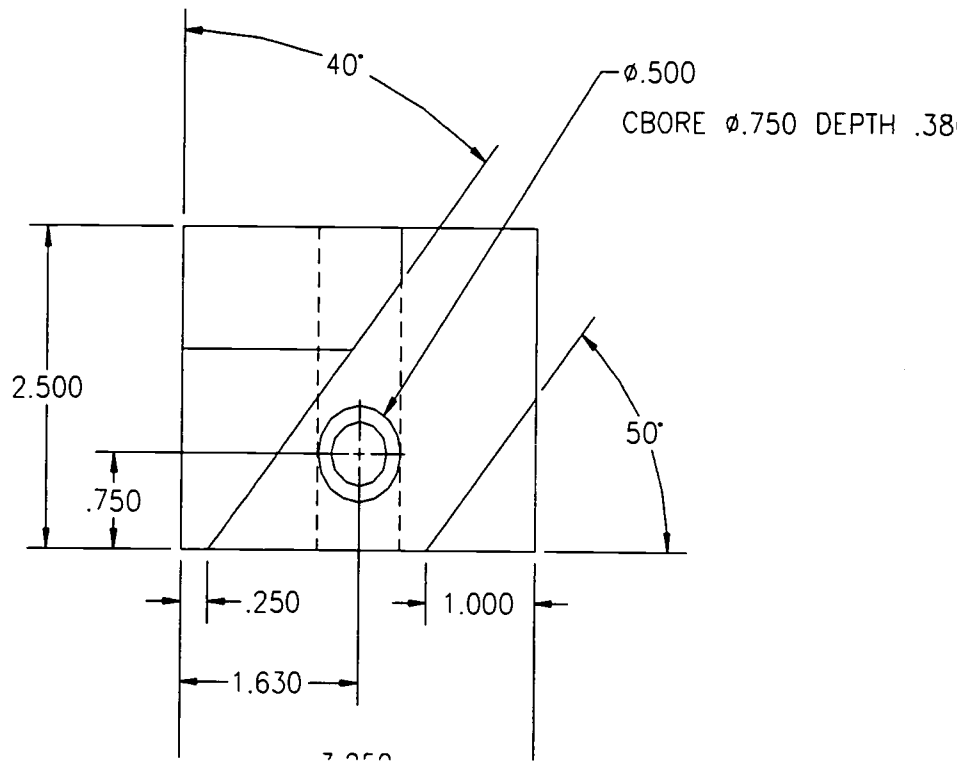

Figure 5

This completes the top view dimensioning. Note that the .940 representing the chamfer feature is not in the top view. This chamfer feature is shown on edge in the side view. The same can be said for the 1.25 dimension for the width of the chamfer feature. This width is shown on edge in the front view. So, let's move on to the front view.

Front view dimensions

Let's start with the vertical dimensions. The 1.560 overall and the .190 tab feature are shown nicely on edge. The same for the .620 feature. However, the depth of the 1.000 x 50° wedge is not shown on edge. But, we have no better option in the side view. So, let's get these four dimensions placed using our MAIN dim style.

We will use the baseline plan as done before to obtain the .19 followed by the 1.56 overall. Click on the linear dimension icon (the 1st icon)

First extension line origin or RETURN to select: use the line endpoint for the bottom of the tab.

Second extension line origin: use the appropriate endpoint
Dimension line location (Text/Angle/Horizontal/Vertical/Rotated): place the text, however, it will fall on the top of the dimension extension lines and into the part as shown in figure 6.

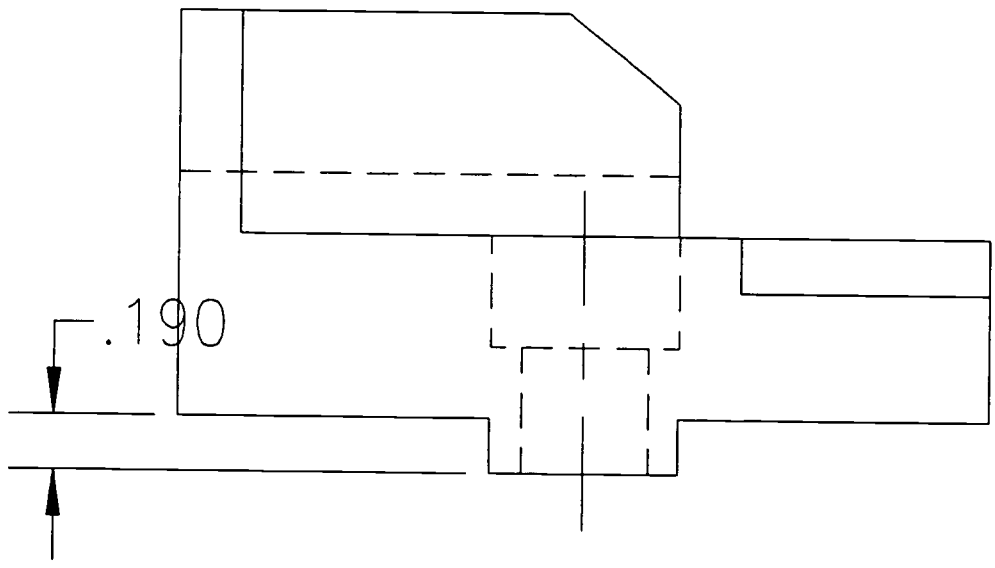

Figure 6

Don't worry, we will fix it later with grips. Now, click on the baseline icon and select the endpoint for the very top of the part. The 1.560 appears. Now, click on the .190 dimension. There is a cold grip in the center of the .190, select it and make it hot. Now, move it into a better position. The two dimensions are shown in figure 7.

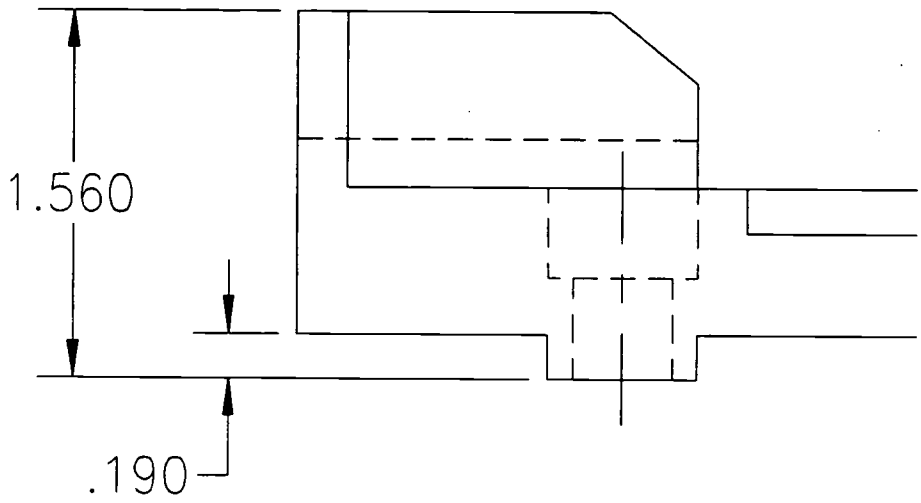

Figure 7

The reason for the placement problem is that AutoCAD will place a dimension based on which end point is picked first. We chose the bottom, then the upper endpoint. If we had chosen the upper first, then the bottom, the dimension would have been placed in the lower position. However, we would have ruined our ability to use baseline as our base point would be wrong. So, remember those grips when it comes to fixing dimensions!!

In a similar manner, place the .190 followed by the .620 dimensions. You will have to perform the same grip trick to obtain the proper placement. These dimensions are shown in figure 8.

There are two 1.250 dimensions to be placed next. The first one locates the tab relative to the left side of the part. The second one, locates the chamfered surface relative to the right side of the part. These are simply linear dimensions, using appropriate endpoints, and placed in a reasonable position. These dimensions are similar to other linear dimensions, therefore, the details will be omitted. You should now have figure 8.

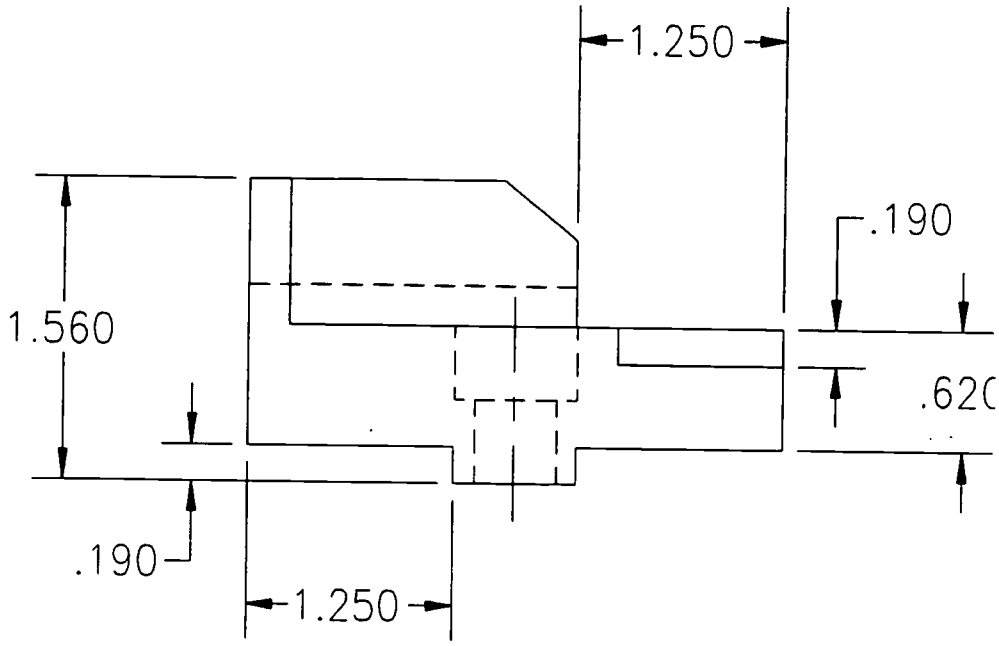

Figure 8

One last dimension remains for the front view, the toleranced .745-.750 dimension. We must create a new dimension style to set up our toleranced dimension.

Click on the Dimension style icon (the last icon in the dimension toolbar). Set the style MAIN as the current style. Where the style is listed next to the word "Name:" Hilight the word MAIN, type 745-750-tol, then click the "Save" button. You should have a message:

"Created 745-750-TOL from MAIN".

Note that there are three areas for setting: Geometry, Format, and Annotation. Because we are creating this style from MAIN, we will only need to enter the Annotation section in order to establish our tolerancing parameters. Click on Annotation. In the dialog box:

Primary Units: Click on "Units". A sub-dialog box comes up:
- Units: Decimal
- Tolerance: "Precision" should be three decimal places.
- Zero Suppression: "Leading" should be "x" indicating on.
- OK

Tolerance: Method should be "Limits".
- Upper Value: Should be .000
- Lower Value: Should be .005

Text: Style should be ROMANS

Height: 5/32
Gap: .05
Accept all other default values.
OK

Back at the first dialog box, Click on Save to save our settings for the dimension parent style of 745-750-TOL.

Some explanations:

The line representing the bottom of the tab was drawn at .750. Therefore, for proper tolerancing, we must subtract .005 from .750 (the lower value) and we must add .000 (the upper value) to .750. This data will yield the proper tolerance.

Also, notice that this has been created as a Parent dimension style. Due to the nature of this toleranced dimension, there would be no changes to make if we created a linear child. Therefore, the parent will do the job fine.

Finally, when setting units, notice that "Dimension Precision" is NOT used. For tolerancing we use "Tolerance Precision"!!

Now, let's create the dimension. Click on the linear dimension icon.

First extension line origin or RETURN to select: <enter> to go into select mode.

Select object to dimension: Simply pick the line (bottom of the tab) representing our .750 length. This is faster than selected two endpoints!

Dimension line location (Text/Angle/Horizontal/Vertical/Rotated): use intersection of the arrow head and extension line of the 1.250 dimension so that this toleranced dimension is inline with the 1.250 dimension.

The front view dimensions are now complete and are shown in figure 9.

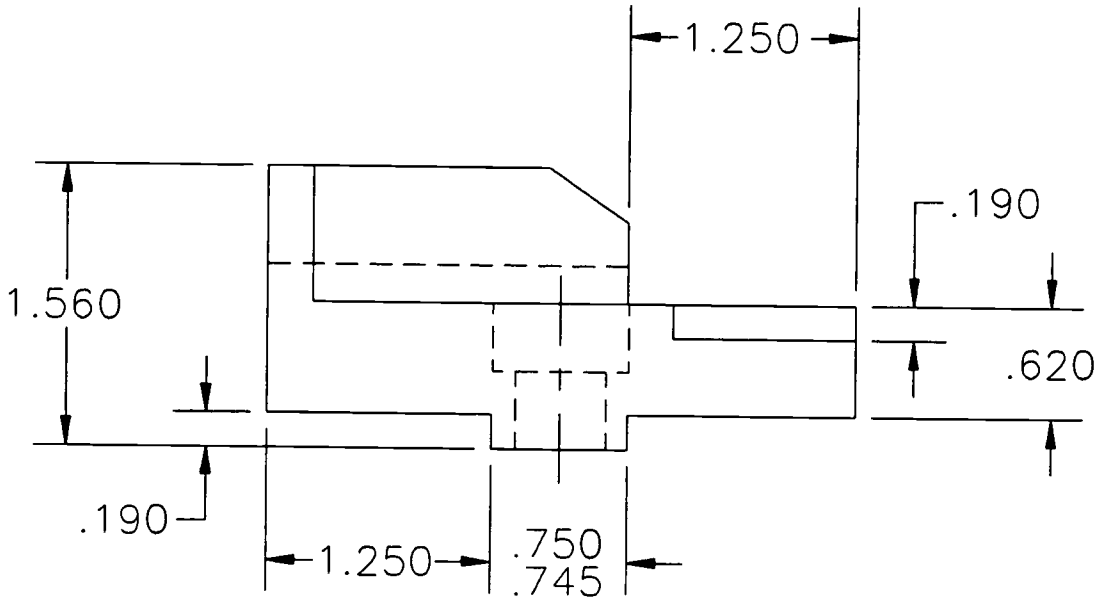

Figure 9

Side view dimensions:

Let's now turn our attention to the side view. The only dimensions remaining are the two necessary to define the chamfered feature, .940 and 30°. First, let's set our dimension style Main as our current style.

Click on the Dimension Style icon (the last one in the dimensioning toolbar). Set MAIN as the current style. Click on OK.

Zoom in on the side view.

Click on the angular dimension icon (the 4th icon).

Select arc, circle, line, or RETURN: select line labeled "Pick this line first" as shown in Figure 10.

Second line: select line labeled "Pick this line second" as shown in fig. 10

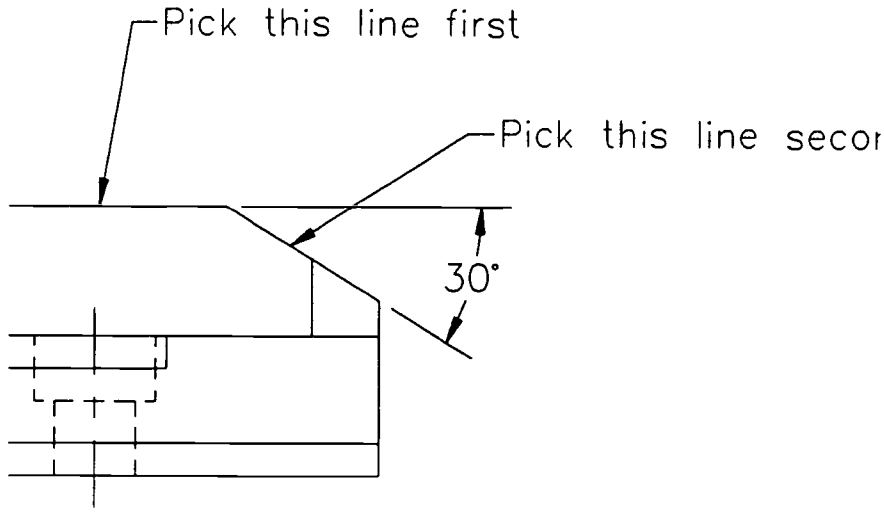

Figure 10

Dimension arc line location (Text/Angle): Place the dimension as appropriate.

Now, for the .940: Click on the linear dimension icon and use endpoints to obtain the .940 dimension and place the dimension in a reasonable space.

This finishes our dimensioning. The final version is shown in Appendix A.

Alternative method for toleranced dimensions:

Here's an alternative to using a tolerance dimension style. With the dimension style MAIN set as current we would have created the 1.250 dimension first. Then use "continue dimension" (the 6th icon). When the continue dimension icon is selected, you are prompted to "select second origin point". Select the appropriate endpoint for the .745-.750 dimension. The dimension is placed automatically inline with the 1.250. Naturally, the dimension reads ".750". End the continue dimension command with a couple of <enter>'s. Now we click on the change property icon. (The letter A in the Object Properties toolbar. Select the .750 dimension and <enter>. In the dialog box, click on annotation and fill in the appropriate areas as described previously. The toleranced dimension is now created.

An important reminder: GRIPS is the best command to use to move dimension text, stretch or shrink extension lines, adjust dimension gap origin size, or rotate diameter or radial dimensions.

LSR-H13-LE
Perform Advanced Dimensioning
Attachment 4: **MASTER** Laboratory Exercise

Successful completion of this technical module will be based on the students' successful completion of the following components:

a. Create and use Dimension Styles (DDIM); and,
b. Apply geometric dimensioning from ANSI Y14.5.

LSR-H14-HO
Use and Manipulate Blocks
Attachment 1: **MASTER** Handout

Objective(s):

Upon completion of this unit the student will be able to:

a. Create a block (BLOCK);
b. Insert blocks into the drawing (INSERT, DDINSERT);
c. Make a block available outside the current drawing (WBLOCK);
d. Assign attributes to blocks (DDATTDEF); and,
e. Edit attribute information (DDATTE).

Note: AutoCAD commands are in caps.

Module Outline:

I. Use and Manipulate Blocks
   A. Create a block (BLOCK)
   B. Insert blocks into the drawing (INSERT, DDINSERT)
   C. Make a block available outside the current drawing (WBLOCK)
   D. Assign attributes to blocks (DDATTDEF)
   E. Edit attribute information (DDATTE)

LSR-H14-LE
Use and Manipulate Blocks
Attachment 2: **MASTER** Laboratory Exercise

Successful completion of this technical module will be based on the students' successful completion of the following components:

a. Demonstrate the ability to create a BLOCK;
b. Demonstrate the ability to insert blocks into the drawing (INSERT, DDINSERT);
c. Demonstrate the ability to make a block available outside the current drawing by creating a WBLOCK;
d. Demonstrate the ability to assign attributes to blocks (DDATTDEF); and,
e. Demonstrate the ability to edit attribute information (DDATTE).

LSR-H15-HO
Use Blocks to Automate the Drawing Process
Attachment 1: MASTER Handout

Objective(s):

Upon completion of this unit the student will be able to:

a. Use blocks to create a bill of materials; and,
b. Create a standard parts library.

Note: AutoCAD commands are in caps.

Module Outline:

I. Use Blocks to Automate the Drawing Process
   A. Create a standard parts library
   B. Use attributes to create a bill of materials and parts list

ERIC

Successful completion of this technical module will be based on the students' successful completion of the following components:

a. Demonstrate the ability to create and use a standard parts library; and,
b. Demonstrate the ability to create and use attributes in the creation of bills of materials.

Library Blocks

In order to simplify the use of common symbology, we will create a library of blocks that are frequently used. In addition, our library will contain the means for an automated parts list in which attributes are assigned to a block in order to allow for variable text.

Starting with a blank AutoCAD drawing, create the following symbols on layer 0 (zero), then block with a convenient name. The length of your block name can be any number of characters. You can use letters or numbers, however, you cannot use a space (space bar input). Instead of a space, you can use a dash (-) to separate words (e.g., FINISH-MARK). By drawing all blocks on layer zero, the inserted block will assume the layer properties of the current layer at the time of insertion. Save this library drawing with an appropriate name (e.g., GMLIB.dwg).

The "H" in the balloon, flag, and finish mark will be an attribute to allow for variable text.

"H" IN THE FOLLOWING BLOCKS IS 1 INCH

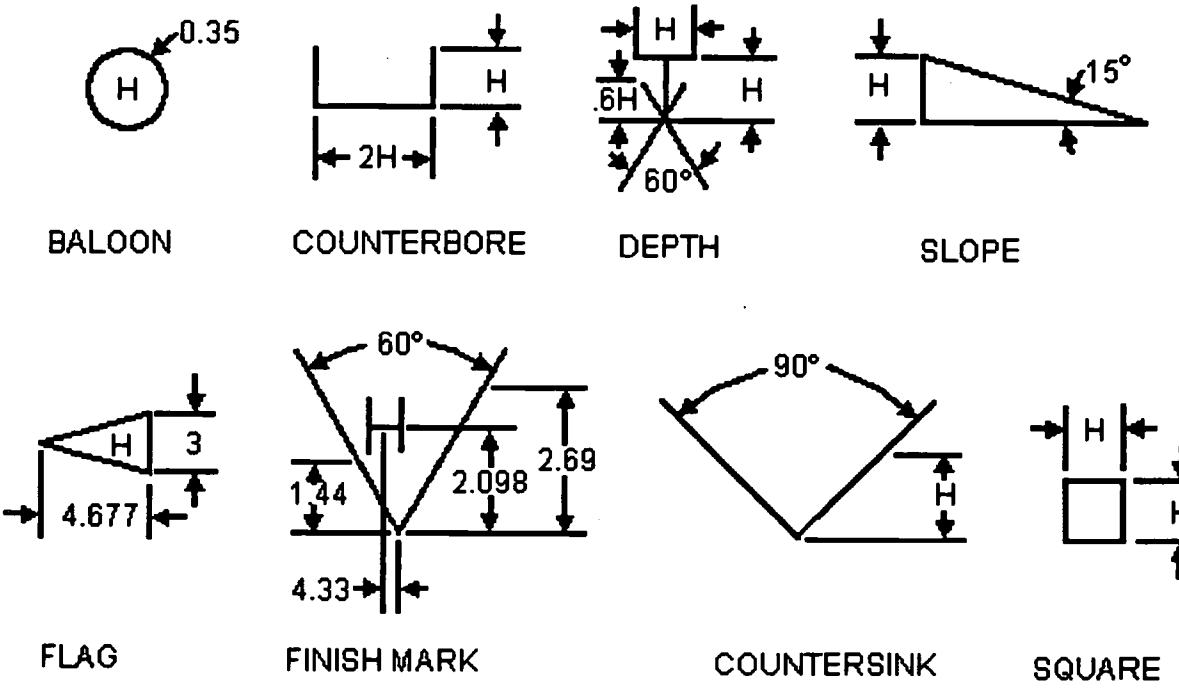

BALOON COUNTERBORE DEPTH SLOPE

FLAG FINISH MARK COUNTERSINK SQUARE

The parts list header appears below. Draw the header, including the text shown ,then block with an appropriate name. On an assembly drawing, this header will be placed at the top of the drawing to begin the parts list. Underneath the header, will appear each item in the parts assembly. Therefore, we need a second block to serve for each item. Using the frame size given in the header, create a "parts list item line" by assigning attributes to each column in the frame. As each parts list item line is inserted, the user will be prompted for information to fill the line. The user continues to insert these parts list item lines, until all parts in the assembly have been listed.

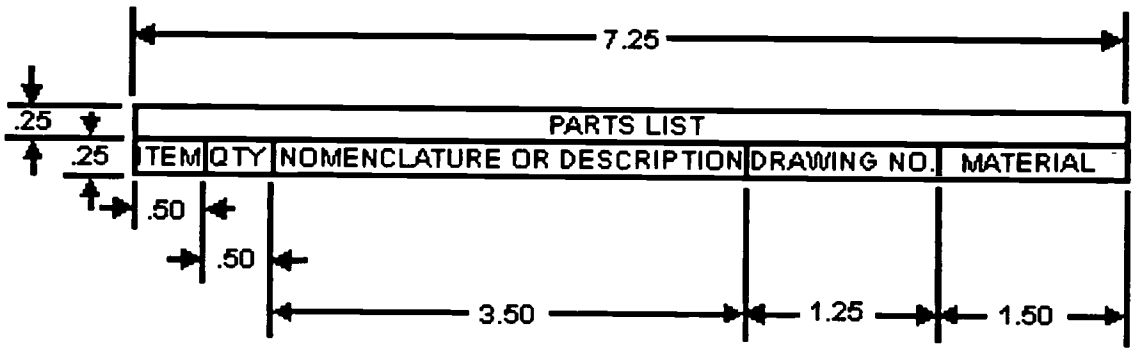

Laser Machinist .... apply the principles of electronics, lasers, optics, materials, engineering documentation, CAD/CAM, and systems integration to manufacture products following current industry and company standards.

Duties	Tasks												
A Practice Laser Safety	A-1 Discuss laser safety standards	A-2 Discuss basic laser principles	A-3 Discuss laser hazards	A-4 Discuss control measures									
B Apply Mathematical Concepts	B-1 Perform basic mathematical functions	B-2 Perform algebraic functions	B-3 Study exponents and right triangle geometry	B-4 Study elements of plane and solid geometry	B-5 Perform data evaluation and statistical analysis	B-6 Perform proportioning and interpolation	B-7 Perform basic trigonometric calculations	B-8 Investigate vectors and vector systems	B-9 Investigate the Cartesian Coordiante System				
C Perform Measurement and Inspection	C-1 Study basics of metrology	C-2 Select instruments used for measurement	C-3 Study datums and the three plane concept	C-4 Select gauging tools	C-5 Use CMM for location of features	C-6 Perform measurements for orientation tolerances	C-7 Perform measurment by optical comparison	C-8 Perform measurements for circularity, concentricity, runout, and straightness tolerances	C-9 Investigate advanced metrology topics				
D Troubleshoot Industrial Electronics and Control	D-1 Perform DC voltage, current, and power measurements	D-2 Perform AC voltage, current, and power measurements	D-3 Investigate digital logic systems	D-4 Investigate diode applications	D-5 Investigate transistors and thyristors	D-6 Investigate operational amplifiers	D-7 Investigate power supply circuits						
E Apply Concepts of Modern Optics	E-1 Study reflection and refraction at plane surfaces	E-2 Perform imaging with a single lens	E-3 Perform imaging with multiple lenses	E-4 Study F-stops and apertures	E-5 Use laser beam-expanding collimators	E-6 Study interference	E-7 Study diffraction	E-8 Study polarization	E-9 Investigate radiometry and photometry				
F Perform CNC Machining	F-1 Apply machine specific nomenclature and terminology	F-2 Investigate the Cartesian coordinate system as applied to a CNC mill or laser	F-3 Apply CNC programming language	F-4 Perform start up, tool changing, and ending of programs	F-5 Perform positioning and basic drilling	F-6 Create a sub-program	F-7 Perform contouring	F-8 Apply tool radius compensation	F-9 Perform program preparation	F-10 Apply special laser coding parameters			
G Investigate Industrial Laser Systems	G-1 Review characteristics of light	G-2 Investigate emission and absorption of light	G-3 Discuss optical cavities and laser modes	G-4 Discuss temporal characteristics of lasers	G-5 Investigate spatial characteristics of lasers	G-6 Discuss laser classifications and characteristics							
H Perform Computer-Aided Drafting (CAD)	H-1 Discuss and understand PC basics	H-2 Discuss CAD basics and file management	H-3 Use drawing settings	H-4 Perform basic editing commands	H-5 Create drawings with accuracy	H-6 Organize drawing information	H-7 Control the display of drawings	H-8 Use intermediate drawing commands	H-9 Perform intermediate editing commands	H-10 Create multi view drawings	H-11 Create sectioned drawings	H-12 Investigate basic dimensioning	H-13 Perform advanced dimensioning
	H-14 Use and manipulate blocks	H-15 Use blocks to automate the drawing process											
I Perform Laser Materials Processing	I-1 Review laser safety standards	I-2 Discuss lasers used for materials processing	I-3 Discuss laser optics and beam characteristics	I-4 Investigate absorption of laser energy	I-5 Use lasers for welding and surface treatment	I-6 Use lasers for material removal							
J Perform Computer-Aided Manufacturing (CAM)	J-1 Discuss and understand the basics of a PC based CAM system	J-2 Discuss basic CAM operations	J-3 Set up cutting tools	J-4 Create simple part profiles	J-5 Create and edit complex part profiles	J-6 Perform roughing, drilling, and counterboring	J-7 Advanced editing of part profiles	J-8 Edit tool paths	J-9 Use construction layers in SmartCAM	J-10 Perform user commands and machine events	J-11 Create families of parts	J-12 Perform CAD/CAM integration	J-13 Perform code generation

LSR PM4
040698

LSR-I1-HO
Review Laser Safety Standards
Attachment 1: MASTER Handout

Objective(s):

Upon completion of this unit the student will be able to:

a. Discuss ANSI-Z136.1 ***Safe Use of Lasers***;
b. Discuss the LIA ***Laser Safety Guide***; and,
c. Discuss LIA ***Guide for the Selection of Laser Eye Protection***.

Module Outline:

I. Discuss Laser Safety Basics
   A. Discuss the type of lasers used at (organization name)
   B. Provide a brief explanation of the ANSI standards for laser safety
   C. Discuss the LIA ***Laser Safety Guide***
   D. Discuss LIA ***Guide for the Selection of Laser Eye Protection***
   E. Show video ***Laser Safety Comes to Light***

LSR-I1-LE
Review Laser Safety Standards
Attachment 2: **MASTER** Laboratory Exercise

Successful completion of this technical module will be based on the students' successful completion of the following components:

1. Describe the type of lasers used at (organization name);
2. Provide a brief explanation of the ANSI standards for laser safety;
3. Discuss the LIA ***Laser Safety Guide***; and,
4. Discuss LIA ***Guide for the Selection of Laser Eye Protection.***

LSR-I2-HO
Discuss Lasers Used for Materials Processing
Attachment 1: **MASTER** Handout

Objective(s):

Upon completion of this unit the student will be able to:

a. Discuss basic elements of a laser;
b. Discuss laser characteristics;
c. Discuss current laser availability; and,
d. Discuss high-power materials processing lasers.

Module Outline:

I. Discuss Lasers Used for Materials Processing
  A. Discuss basic elements of a laser
    1. Electromagnetic radiation
    2. Generation of coherent optical energy
    3. Laser subsystems
  B. Discuss laser characteristics
    1. Laser operating parameters
    2. Temporal characteristics of lasers
    3. Spatial characteristics of lasers
  C. Discuss current laser availability
    1. Survey of commercially available lasers
    2. R&D lasers
  D. Discuss high-power materials processing lasers
    1. CO_2 lasers
      a. Resonator
      b. Excitation power source
      c. Beam power
      d. Beam quality
      e. Cost
    2. Nd:YAG lasers
      a. Resonator
      b. Excitation power source
      c. Beam power
      d. Beam quality
    3. Excimer lasers
      a. Resonator
      b. Excitation power source
      c. Beam power
      d. Beam quality

LSR-I2-LE
Discuss Lasers Used for Materials Processing
Attachment 2: **MASTER** Laboratory Exercise

Successful completion of this technical module will be based on the students' successful completion of the following components:

I. Discuss Lasers Used for Materials Processing
  A. Discuss basic elements of a laser
    1. Electromagnetic radiation
    2. Generation of coherent optical energy
    3. Laser subsystems
  B. Discuss laser characteristics
    1. Laser operating parameters
    2. Temporal characteristics of lasers
    3. Spatial characteristics of lasers
  C. Discuss current laser availability
    1. Survey of commercially available lasers
    2. R&D lasers
  D. Discuss high-power materials processing lasers
    1. CO_2 lasers
      a. Resonator
      b. Excitation power source
      c. Beam power
      d. Beam quality
      e. Cost
    2. Nd:YAG lasers
      a. Resonator
      b. Excitation power source
      c. Beam power
      d. Beam quality
    3. Excimer lasers
      a. Resonator
      b. Excitation power source
      c. Beam power
      d. Beam quality

LSR-I3-HO
Discuss Laser Optics and Beam Characteristics
Attachment 1: **MASTER** Handout

Objective(s):

Upon completion of this unit the student will be able to:

a. Discuss the nature of laser beams;
b. Discuss transverse modes;
c. Discuss Gaussian beams;
d. Demonstrate an understanding of higher-order mode;
e. Demonstrate an understanding of focusing and depth of focus;
f. Demonstrate an understanding of focusing optics; and,
g. Discuss optical materials and beam delivery systems.

Module Outline:

I. Discuss Laser Optics and Beam Characteristics
   A. Discuss the nature of laser beams
   B. Discuss transverse modes
   C. Discuss Gaussian beams
   D. Demonstrate an understanding of higher-order mode
   E. Demonstrate an understanding of focusing and depth of focus
   F. Demonstrate an understanding of focusing optics
   G. Discuss optical materials and beam delivery systems

LSR-I3-LE
Discuss Laser Optics and Beam Characteristics
Attachment 2: **MASTER** Laboratory Exercise

Successful completion of this technical module will be based on the students' successful completion of the following components:

I. Discuss Laser Optics and Beam Characteristics;
   1. Demonstrate an understanding of nature of laser beams;
   2. Demonstrate an understanding of transverse modes;
   3. Demonstrate an understanding of Gaussian beams;
   4. Demonstrate an understanding of higher-order mode;
   5. Demonstrate an understanding of focusing and depth of focus;
   6. Demonstrate an understanding of focusing optics; and,
   7. Demonstrate an understanding of optical materials and beam delivery systems.

LSR-I4-HO
Investigate Absorption of Laser Energy
Attachment 1: **MASTER** Handout

Objective(s):

Upon completion of this unit the student will be able to:

a. Discuss the absorption process;
b. Discuss thermal properties of materials;
c. Discuss Thermodynamic properties of materials;
d. Discuss melting and vaporization;
e. Discuss plasma effects;
f. Discuss the effects of surface reflectivity; and,
g. Investigate the regimes of laser parameters for specific applications.

Module Outline:

I. Discuss the Absorption of Laser Energy
  A. Discuss the absorption process
    1. Irradiance
    2. Exponential absorption law
    3. Absorption coefficient
  B. Discuss thermal properties of materials
    1. Heat flow into a material
    2. Specific heat of a material
    3. Thermal diffusivity
    4. Depth of penetration
    5. Thermal time constant
  C. Discuss Thermodynamic properties of materials
    1. Heat capacity
    2. Latent heat of fusion
    3. Latent heat of vaporization
    4. Thermodynamic properties of metals
    5. Melting and vaporization approximation using the energy balance model
  D. Discuss melting and vaporization
  E. Discuss plasma effects
  F. Discuss the effects of surface reflectivity
  G. Investigate the regimes of laser parameters for specific applications
    1. Melting
    2. Vaporization
    3. LSA wave generation
    4. Plasma collective effects

ERIC

Successful completion of this technical module will be based on the students' successful completion of the following components:

I. Discuss the Absorption of Laser Energy
   - A. Discuss the absorption process
     1. Irradiance
     2. Exponential absorption law
     3. Absorption coefficient
   - B. Discuss thermal properties of materials
     1. Heat flow into a material
     2. Specific heat of a material
     3. Thermal diffusivity
     4. Depth of penetration
     5. Thermal time constant
   - C. Discuss Thermodynamic properties of materials
     1. Heat capacity
     2. Latent heat of fusion
     3. Latent heat of vaporization
     4. Thermodynamic properties of metals
     5. Melting and vaporization approximation using the energy balance model
   - D. Discuss melting and vaporization
   - E. Discuss plasma effects
   - F. Discuss the effects of surface reflectivity
   - G. Investigate the regimes of laser parameters for specific applications
     1. Melting
     2. Vaporization
     3. LSA wave generation
     4. Plasma collective effects

LSR-I5-HO
Use Lasers for Welding and Surface Treatment
Attachment 1: **MASTER** Handout

Objective(s):

Upon completion of this unit the student will be able to:

a. Discuss the advantages and limitations of laser welding;
b. List typical lasers suitable for welding;
c. Discuss elements of a laser welding system;
d. Determine the spot size and irradiance of a typical laser focusing system;
e. Describe the importance of thermal diffusivity and reflectivity of the workpiece;
f. Calculate the depth of penetration of heat into a metal;
g. Discuss the relative laser weldability of various materials; and,
h. Describe laser surface heat treating.

Module Outline:

I. Discuss Laser Welding and Surface Modification
   A. Discuss the advantages and limitations of laser welding
   B. List typical lasers suitable for welding
   C. Discuss elements of a laser welding system
   D. Determine the spot size and irradiance of a typical laser focusing system
   E. Describe the importance of thermal diffusivity and reflectivity of the workpiece
   F. Calculate the depth of penetration of heat into a metal
   G. Discuss the relative laser weldability of various materials
   H. Describe laser surface heat treating
   I. Discuss Rockwell Hardness testing

LSR-I5-LE
Use Lasers for Welding and Surface Treatment
Attachment 2: **MASTER** Laboratory Exercise

Successful completion of this technical module will be based on the students' successful completion of the following components:

I. Discuss Laser Welding and Surface Modification
   - A. Discuss the advantages and limitations of laser welding
   - B. List typical lasers suitable for welding
   - C. Discuss elements of a laser welding system
   - D. Determine the spot size and irradiance of a typical laser focusing system
   - E. Describe the importance of thermal diffusivity and reflectivity of the workpiece
   - F. Calculate the depth of penetration of heat into a metal
   - G. Discuss the relative laser weldability of various materials
   - H. Describe laser surface heat treating
   - I. Discuss Rockwell Hardness testing

LSR-I6-HO
Use Lasers for Material Removal
Attachment 1: **MASTER** Handout

Objective(s):

Upon completion of this unit the student will be able to:

a. Calculate power density of a focused laser beam;
b. Discuss typical laser systems used for material removal;
c. Determine thermal properties of workpiece material necessary for vaporization;
d. Discuss practical applications of laser hole drilling;
e. Discuss practical applications of laser cutting;
f. Discuss practical applications of laser scribing; and,
g. Discuss practical applications of laser marking.

Module Outline:

I. Discuss Laser Welding and Surface Modification
   A. Calculate power density of a focused laser beam
   B. Discuss typical laser systems used for material removal
      1. Ruby
      2. Nd:YAG (pulsed and CW)
      3. Nd:glass
      4. CO_2 (pulsed and CW)
   C. Determine thermal properties of workpiece material necessary for vaporization
      1. Vaporization time for various metals
      2. Vaporization depth vs. exposure time
      3. Relationship between hole depth and number of pulses
   D. Discuss practical applications of laser hole drilling
   E. Discuss practical applications of laser cutting
   F. Discuss practical applications of laser scribing
   G. Discuss practical applications of laser marking

Successful completion of this technical module will be based on the students' successful completion of the following components:

I. Discuss Laser Welding and Surface Modification
   - A. Calculate power density of a focused laser beam
   - B. Discuss typical laser systems used for material removal
     1. Ruby
     2. Nd:YAG (pulsed and CW)
     3. Nd:glass
     4. CO_2 (pulsed and CW)
   - C. Determine thermal properties of workpiece material necessary for vaporization
     1. Vaporization time for various metals
     2. Vaporization depth vs. exposure time
     3. Relationship between hole depth and number of pulses
   - D. Discuss practical applications of laser hole drilling
   - E. Discuss practical applications of laser cutting
   - F. Discuss practical applications of laser scribing
   - G. Discuss practical applications of laser marking

Laser Machinist .... apply the principles of electronics, lasers, optics, materials, engineering documentation, CAD/CAM, and systems integration to manufacture products following current industry and company standards.

Duties	Tasks												
A Practice Laser Safety	A-1 Discuss laser safety standards	A-2 Discuss basic laser principles	A-3 Discuss laser hazards	A-4 Discuss control measures									
B Apply Mathematical Concepts	B-1 Perform basic mathematical functions	B-2 Perform algebraic functions	B-3 Study exponents and right triangle geometry	B-4 Study elements of plane and solid geometry	B-5 Perform data evaluation and statistical analysis	B-6 Perform proportioning and interpolation	B-7 Perform basic trigonometric calculations	B-8 Investigate vectors and vector systems	B-9 Investigate the Cartesian Coordiante System				
C Perform Measurement and Inspection	C-1 Study basics of metrology	C-2 Select instruments used for measurement	C-3 Study datums and the three plane concept	C-4 Select gauging tools	C-5 Use CMM for location of features	C-6 Perform measurements for orientation tolerances	C-7 Perform measurment by optical comparison	C-8 Perform measurements for circularity, concentricity, runout, and straightness tolerances	C-9 Investigate advanced metrology topics				
D Troubleshoot Industrial Electronics and Control	D-1 Perform DC voltage, current, and power measurements	D-2 Perform AC voltage, current, and power measurements	D-3 Investigate digital logic systems	D-4 Investigate diode applications	D-5 Investigate transistors and thyristors	D-6 Investigate operational amplifiers	D-7 Investigate power supply circuits						
E Apply Concepts of Modern Optics	E-1 Study reflection and refraction at plane surfaces	E-2 Perform imaging with a single lens	E-3 Perform imaging with multiple lenses	E-4 Study F-stops and apertures	E-5 Use laser beam-expanding collimators	E-6 Study interference	E-7 Study diffraction	E-8 Study polarization	E-9 Investigate radiometry and photometry				
F Perform CNC Machining	F-1 Apply machine specific nomenclature and terminology	F-2 Investigate the Cartesian coordinate system as applied to a CNC mill or laser	F-3 Apply CNC programming language	F-4 Perform start up, tool changing, and ending of programs	F-5 Perform positioning and basic drilling	F-6 Create a sub-program	F-7 Perform contouring	F-8 Apply tool radius compensation	F-9 Perform program preparation	F-10 Apply special laser coding parameters			
G Investigate Industrial Laser Systems	G-1 Review characteristics of light	G-2 Investigate emission and absorption of light	G-3 Discuss optical cavities and laser modes	G-4 Discuss temporal characteristics of lasers	G-5 Investigate spatial characteristics of lasers	G-6 Discuss laser classifications and characteristics							
H Perform Computer-Aided Drafting (CAD)	H-1 Discuss and understand PC basics	H-2 Discuss CAD basics and file management	H-3 Use drawing settings	H-4 Perform basic editing commands	H-5 Create drawings with accuracy	H-6 Organize drawing information	H-7 Control the display of drawings	H-8 Use intermediate drawing commands	H-9 Perform intermediate editing commands	H-10 Create multi view drawings	H-11 Create sectioned drawings	H-12 Investigate basic dimensioning	H-13 Perform advanced dimensioning
	H-14 Use and manipulate blocks	H-15 Use blocks to automate the drawing process											
I Perform Laser Materials Processing	I-1 Review laser safety standards	I-2 Discuss lasers used for materials processing	I-3 Discuss laser optics and beam characteristics	I-4 Investigate absorption of laser energy	I-5 Use lasers for welding and surface treatment	I-6 Use lasers for material removal							
J Perform Computer-Aided Manufacturing (CAM)	J-1 Discuss and understand the basics of a PC based CAM system	J-2 Discuss basic CAM operations	J-3 Set up cutting tools	J-4 Create simple part profiles	J-5 Create and edit complex part profiles	J-6 Perform roughing, drilling, and counterboring	J-7 Advanced editing of part profiles	J-8 Edit tool paths	J-9 Use construction layers in SmartCAM	J-10 Perform user commands and machine events	J-11 Create families of parts	J-12 Perform CAD/CAM integration	J-13 Perform code generation

LSR PM6
040698

BEST COPY AVAILABLE

LSR-J1-HO1
Discuss and Understand the Basics of a PC Based CAM System
Attachment 1: MASTER Handout No. 1

Objective(s):

Upon completion of this unit the student will be able to:

a. Demonstrate an understanding of the SmartCAM® graphical users interface (GUI); and,
b. Discuss how CNC and CAM relate.

Module Outline:

I. Discuss and Understand the Basics of a PC Based CAM System
   A. Discuss CNC basics
   B. Study SmartCAM® screen layout
   C. Change the screen layout
   D. Determine how CNC and CAM relate
   E. Investigate basic SmartCAM® features

LSR-J1-HO2
Discuss and Understand the Basics of a PC Based CAM System
Attachment 2: MASTER Handout No. 2

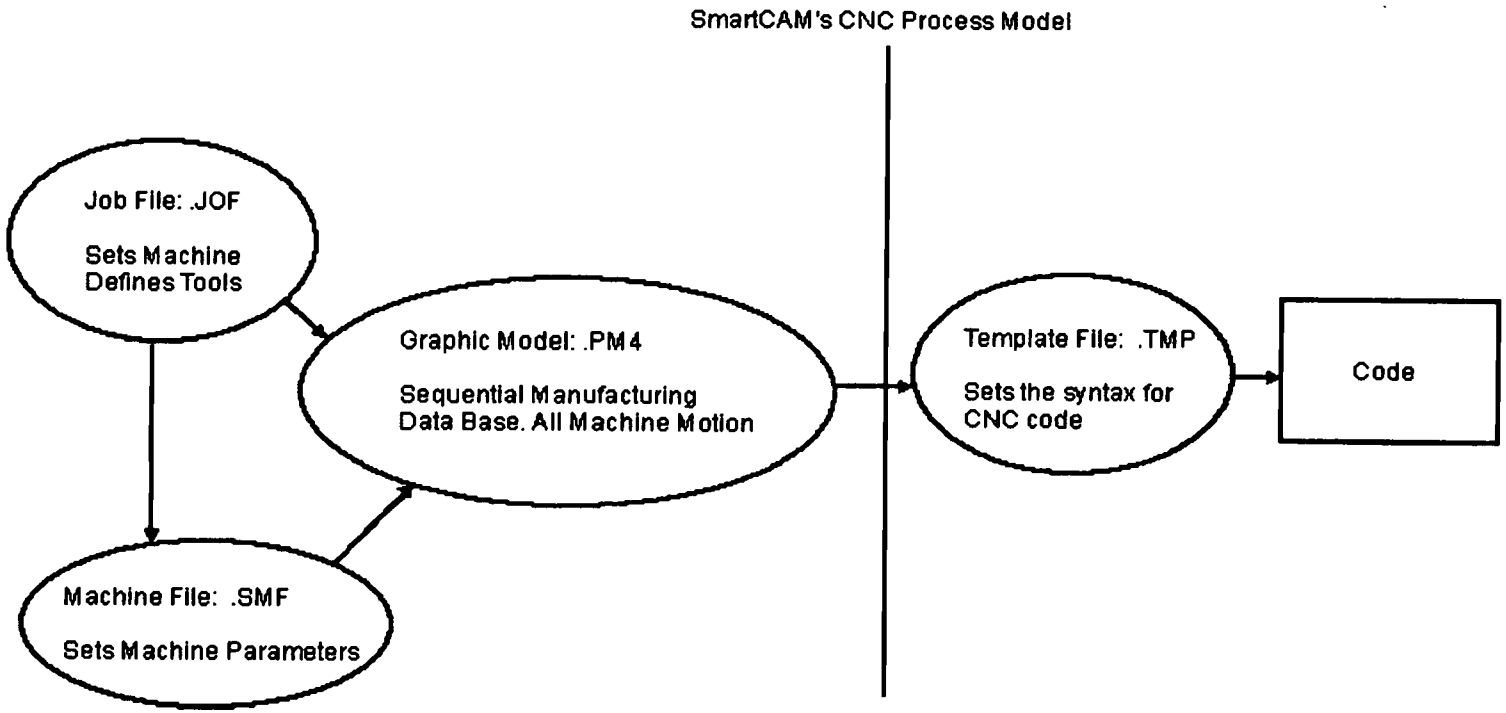

LSR-J1-LE
Discuss and Understand the Basics of a PC Based CAM System
Attachment 3: **MASTER** Laboratory Exercise

Successful completion of this technical module will be based on the students' successful completion of the following components:

a. Discuss CNC basics;
b. Discuss and use the SmartCAM screen layout;
c. Discuss how to change the screen layout;
d. Discuss how CNC and CAM relate; and,
e. Perform basic SmartCAM commands.

LSR-J2-HO
Discuss Basic CAM Operations
Attachment 1: **MASTER** Handout

Objective(s):

Upon completion of this unit the student will be able to:

a. Demonstrate an understanding of the SmartCAM® job plan concept;
b. Discuss the file structure in SmartCAM®; and,
c. Discuss the difference between tools and layers.

Module Outline:

I. Discuss Basic CAM Operations
   A. Study job plan creation
   B. Study the file structure in CAM
   C. Discuss the difference between tools and layers

LSR-J2-LE
Discuss Basic CAM Operations
Attachment 2: **MASTER** Laboratory Exercise

Successful completion of this technical module will be based on the students' successful completion of the following components:

a. Create a job plan in SmartCAM;
b. Discuss the file structure in SmartCAM; and,
c. Discuss the difference between tools and layers.

LSR-J3-HO
Set Up Cutting Tools
Attachment 1: **MASTER** Handout

Objective(s):

Upon completion of this unit the student will be able to:

a. Demonstrate an understanding of the Z axis positions of **Level**, **Profile Top**, and **Clearance**;
b. Demonstrate how to set tool offsets; and,
c. Discuss how to sequence data using Insert operations.

Note: SmartCAM® commands are shown in bold.

Module Outline:

I. Set Up Cutting Tools
   A. Determine how to sequence elements
   B. Perform tool offset (OFFSET)
   C. Determine Z-axis positions (LEVEL & PROF_TOP)
   D. Determine how set clearance for cutting tools (CLEAR)

Note: SmartCAM® commands are shown in caps.

LSR-J3-LE
Set Up Cutting Tools
Attachment 2: **MASTER** Laboratory Exercise

Successful completion of this technical module will be based on the students' successful completion of the following components:

a. Demonstrate how to sequence elements;
b. Demonstrate how to set tool offset (OFFSET);
c. Demonstrate how to enter Z-axis positions (LEVEL & PROF_TOP); and,
d. Demonstrate how to set clearance for cutting tools (CLEAR).

LSR-J4-HO1
Create Simple Part Profiles
Attachment 1: **MASTER** Handout No. 1

Objective(s):

Upon completion of this unit the student will be able to:

a. Demonstrate how to input basic geometry in SmartCAM;
b. Demonstrate some fundamental editing commands;
c. Demonstrate how to change the view of the part profile; and,
d. Discuss how SmartCAM creates CNC code.

Module Outline:

I. Create Simple Part Profiles
   A. Discuss how to input lines, arcs, and circles
   B. Use WALL_OFFSET for roughing cuts
   C. Create blend radii
   D. Create lead in and out moves
   E. Change the view of the part profile (ZOOM, VIEW_ANGLE, Etc.)

Note: SmartCAM® commands are shown in caps.

LSR-J4-HO2
Create Simple Part Profiles
Attachment 2: **MASTER** Handout No. 2

Doing the SHOULDER BLOCK step by step

Before we begin, let's think about how we are to machine this part. This block is a 2 x 2 square with a shoulder pattern on the top. We will cut this from 2.5 x 2.5 x 1.5 inch stock. The stock has been faced and squared and will be held in a vise. Z0 (Z zero) will be taken as the top of the part. X0 (X zero) and Y0 (Y zero) will be the lower left corner of the stock.

Two tools will be used: ϕ1.00 endmill for roughing and ϕ.500 endmill for finishing. Both tools are HSS, center cuttting and four (4) teeth.

This part will be machined as follows:

1. Step 1: using tool 1, takes a ***roughing*** path around 2 x 2 perimeter leaving .020 on the sides for finish. Tool 1 then takes a roughing path around .25 deep shoulder leaving .020 for finish on sides **and bottom.**
2. Step 2: using tool 2, takes a finishing path around 2 x 2 perimeter removing .020 from side. Then tool 2 takes path around .25 deep shoulder removing .020 from side and bottom.
3. Lead in and outs are provided for all cuts!! No plunging into material allowed.

Following machining, the part will be inverted and fly cut to remove the remainder of the stock. This is a separate operation.

First, let's get into SmartCAM. From Window's main menu:
Double click on the SmartCAM icon
→ Double click on Advanced 3D Machining.
SmartCAM's graphic screen and menu appears.

STEP 1: Create job file

1. File → New. You get a dialogue box asking for the name of the job file to be used. However, we have not as yet made one, so, click on "New JOF" to open the Edit Job Info dialog box. In the dialog box:
   Created by: Enter your name
   Machine File: TMC1000
   Part Description: Shoulder block
   Material Desc: AISI 1018

Notes: Whatever seems appropriate.
Close

You have only created Job Information. We must now create the steps with their tools.

2. File → Job File → Add/Edit step. The Add/Edit dialog box appears. Notice "Step" defaults to Step 1 and we are in New_Step mode. There are two key areas for defining a step. **TI ID** (Tooling Identification) and **Op ID** (Operation identification). TI defines the type of tool (endmill, drill, etc.), diameter, length, and so on. Op ID defines the type of operation (milling, drilling, etc.), roughing or finishing, speeds and feeds.

Click on TI ID. Now click on "Edit Page". The Add Tooling Page appears. In the dialog box:

Mill Tool: Click on
In the box: Click on "End Mill"
Accept.

Now the Tooling dialog box appears. "Tooling ID" defaults to ENDMILL.1, this is OK. In the dialog box:

Description: 1.00 dia endmill
Comment: Roughing
Tool Diameter: 1.0
Overall Length: 4.0
Center Cutting: ON
Number of Flutes: 4
Tool_Matl: HSS
Leave all others to their defaults.
Close

Now, let's deal with operation ID. Click on Op ID, then click on Edit Page. The Operation dialog box appears.

The part material is 1018 steel. Checking Machinery's Handbook, or suitable source, indicates that for roughing low carbon steel with a 1.0 dia HSS endmill a speed of 80 Surface Feet per Min. and a feed of .005 inches per tooth are recommended. For finishing with a .5 dia HSS endmill use a speed of 140 Surface Feet per Min. and a feed of .001 inches per tooth. So, In the dialog box:

Speed SFPM: 80 RPM: see note
Primary Feed IPR: see note IPM: see note IPT: .005

Note: RPM (revolutions per minute), IPR (inches per revolution) and IPM (inches per minute) all update automatically following entry of SFPM and IPT data.

Accept defaults for Width of Cut, Depth of Cut, Finish and Floor allowances, life, and coolant.
Close.

You are now back to the Add/Edit step dialogue box. Click on "New Step". Step 2 registers. Repeat the same procedure as above for the finish tool.

Following completion of the second step, save your work. File → Save as. In the dialog box:

P.M. file: a:\demo1 (P.M. means process model, your graphics)
Job File: a:\demo1
Make sure "both" is ON. This will save graphics and job file together

STEP 2: Setting up view screen

1. Let's set the screen size to be compatible with our drawing dimensions:
   VIEW → ENVELOPE In the dialog box:
   MINIMUM: X -1 Y -1 Z -1
   MAXIMUM: X 3 Y 3 Z 1

Remember: Use mouse to click on any value to enter or change.

Note that min values need a negative sign !!

When all values are entered, hit ACCEPT.

2. Let's establish this envelope as the base view, then give the view a name to facilitate changing views. VIEW → BASE and VIEW → NAME VIEW → TOP2 <ENTER>

3. We will now set some display parameters. Utility → Display modes
In the dialog box, accept all defaults except:
   Thickness: turn on
   Draw tools: Set to 3D tools
   Accept

STEP 3: Cutting the perimeter (2 x 2 square)

In SmartCAM we draw the FINISH profiles first. In other words, simply draw the part as shown. Therefore, we need to call up the finish tool (step 2) and assign the appropriate properties. We will start by drawing the 2 x 2 square in a CCW direction. Note that the depth of this square is .75. In other words, the bottom of the end mill should be at

Z = -.75 when cutting or profiling this 2 x 2 square.

1. INSERT → With Step → Click on step 2 (in lower right of screen)
   Note: The Sequence segment (Before/After) is meaningless when we are entering the first elements. So, we simply accepted the default of After element 0

   In the dialog box, enter the properties:
   OFFSET: RIGHT
   LEVEL: -.75
   CLEAR: .25
   PROF_TOP: -.25 (Click it on first)

   Offset, is where we want the tool with respect to the geometry. We are machining in a CCW direction, therefore, with respect to that direction, we want the tool to the right of the geometry. Remember, we will draw this as it appears on the print. Level, is the Z position representing the bottom of the geometry, -.75 in this case. Prof_top is the Z position representing the top of the geometry. In our case it is at Z = -.25. Remember, all Z positions are referenced from Z0 which is the top of the part.

2. Now it's time for geometry. CREATE → GEOMETRY → LINE

   Remember, the dialog box is mouse active. You can click anywhere to enter data in any order you wish. Note that the Z has already been defaulted to -.75 This was set at Level during the Insert command.

   Enter.. Start Point : X 0 Y 0
   End Point : X2 Y 0

   The first line is drawn as shown in figure 1. The circle represents the .5 diameter finish endmill shown with an offset of right.

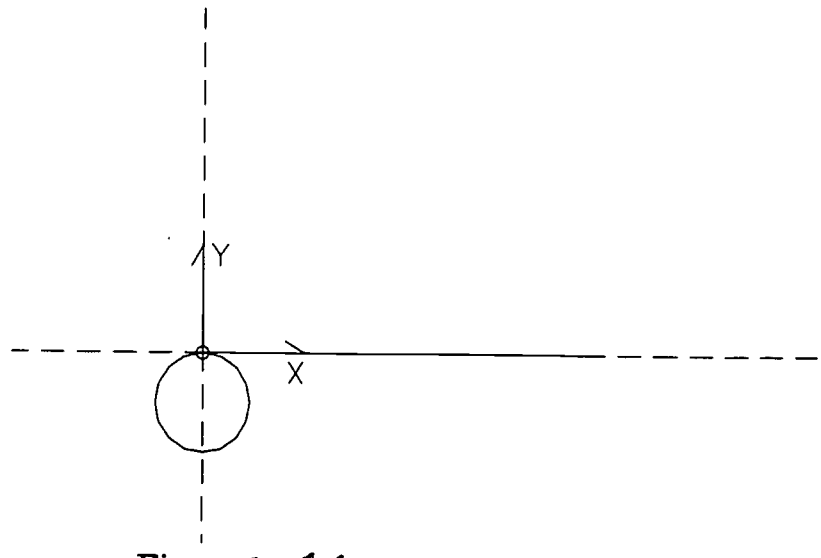

Figure 1

In the dialog box, notice that when SC is close to drawing your line, an asterisk (*) appears. This means that one more piece of data will trigger a line.

3. For the second line, we'll take advantage of SC's snap ability. You can snap to a line's endpoint or midpoint, to a circle or arc's center, or to the intersection of two lines.

We are already in the line dialog box, so click on the words "Start Point". Notice that Start Point lights up, this places the cursor in coordinate mode, meaning that when we snap to an endpoint, we get the X, Y, and Z values. Use the mouse to click on the end of the first line in the graphic view. Notice X 2 Y 0 Z -.75, which is the endpoint of the line, fills the "start point" in the dialog box.

Now, for the End Point, simply click on the "X" in the dialog box and enter 2, click on the "Y" and enter 2 and you've got the second line. (The Z should remain -.75.)
Complete the last two lines returning to X 0 Y0. Your screen should look like figure 2.

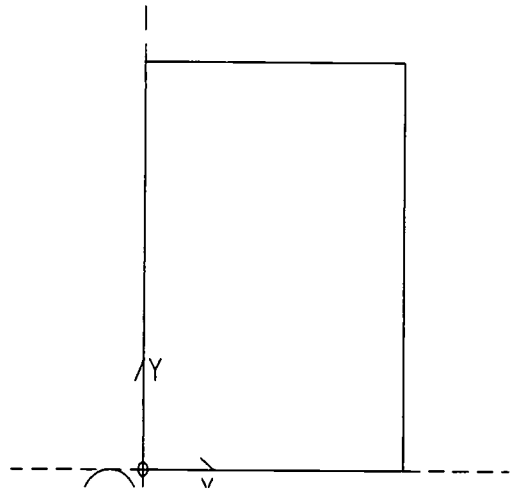

Figure 2

Caution: Be careful if you try to snap near the origin! You probably will grab 0,0,0 when you really wanted 0, 0, -.75. Therefore, you are better off typing in the data.

STEP 4: Cutting the shoulder

In order to cut the shoulder, we must first go through the Insert command in order to set the Z level to the shoulder depth of .25

1. Click on INSERT. Notice you now have a Before/After option. We want the shoulder to be machined after the perimeter. Therefore:

   After → Element_Seq → either pick the last element in the data base (For me it was 4), or enter the number in the dialog box. Remember, this first part of this insert command deals with sequence (Notice the Seq!). In other words, where in the data base do we want to put the geometry we are about to enter. This is important because, the order in the data base is the order of machining !!!

   Finish the dialog box settings: Make sure you have with step 2, offset right, prof_top is now at 0, clearance at .25 and set the Level at -.25

2. Geometry → Line. "Start Point" is X.25 Y.25, Z should be defaulted to -.25 If it isn't, you must go back to Insert to fix. "End Point" is X1 Y.25 Upon entering the Y, the line triggers. You now have figure 3.

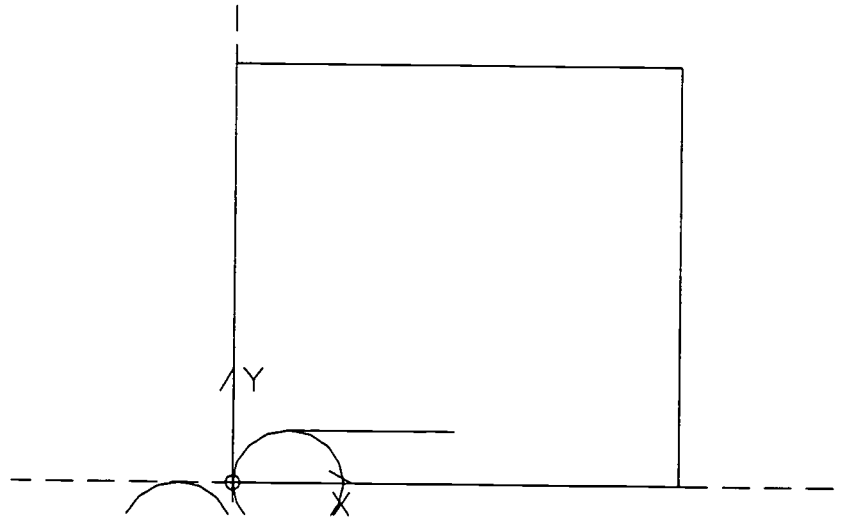

Figure 3

The next line is at a 35 deg angle. For Start Point, click on the words "Start Point" then snap to the end of the last line we drew. SmartCAM now thinks you will be entering a co-ordinate for end point as we notice the words "End Point" are lit up and an asterisk is present. We don't know both coordinates, but we know an angle and the end X. Click on "Line Angle" and enter 35. Notice a dotted line appears. Click on the "X" next to End point and enter 1.75. The line is drawn.

Hit the "Reset" button to clear your line dialog box. This is critical because SmartCAM is now set up to draw 35 degree lines for the rest of your life !!

We will now square off the shoulder and blend the radius later. Remember to Snap to existing values whenever possible !! The start and end points for the next two lines are:

Start Point:	X 1.75	Y .775	Z -.25
End Point:	X 1.75	Y 1.75	Z -.25

and

Start Point	X 1.75	Y 1.75	Z -.25
End Point	X .75	Y 1.75	Z -.25

Note: Using coordinate mode, I snapped to the endpoint of the 35° line. I DID NOT enter the value .775. How would you know this anyway? It is a trig resultant!

Now we must draw a line whose length is known. Click on "Start Point" and snap to the appropriate end point. Now click on "Length" and enter .75. Click on "X" next to "End point" and enter .25. The line goes up! How come? Notice that there are two possible solutions to the info given. Hit the "Undo" button. SmartCAM gives you a pop up dialog box indicating that there is more that one solution. Hit the "next" key until what you want appears on the screen. Hit accept and you've got it! Reset the line dialog box to clear the entered length of .75!!

I'm sure you can draw the last line to X.25 Y.25 Z-.25 to finish the shoulder. You now have figure 4.

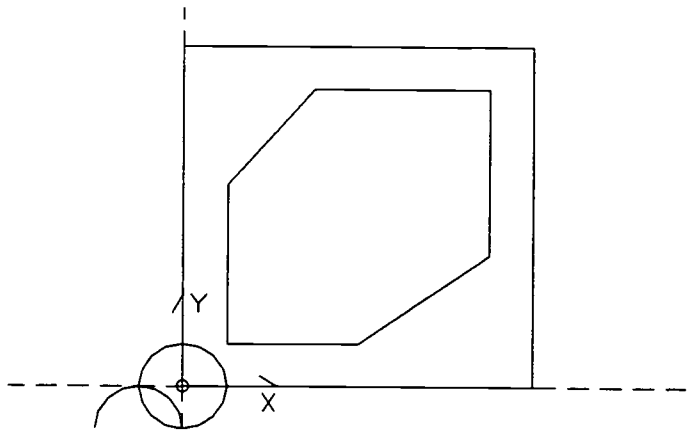

Figure 4

Let's get that radius in there:

Edit → Geo_edit → Blend. Click on "inside radius" and enter .25. The default may already be .25 but get in the habit of checking. Now notice your cursor, you are being asked to pick the two elements for the blend. For "Select first element":, pick one of the two lines. The cursor automatically jumps to "Select 2nd Element", so now pick the second line. (It does not matter which line you pick first.) The radius appears.

3. Finish geometry is now complete. Let's examine our part from other viewpoints:

   View → Get_View → Iso. You may View → Window to improve viewing. We now see the completed finish profiles in an isometric view (Figure 5). You may also see a front view by: View → Get_View → Front (Figure 6).

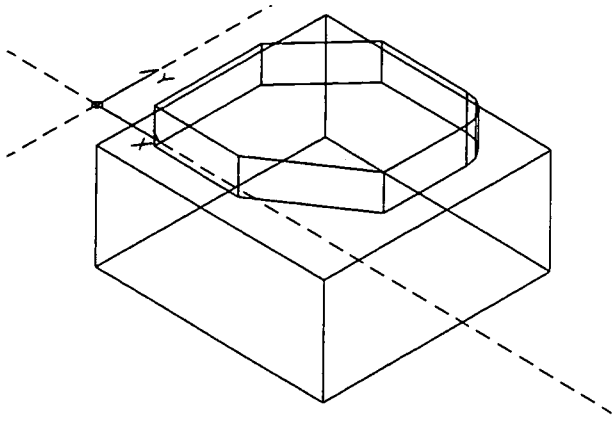

Figure 5

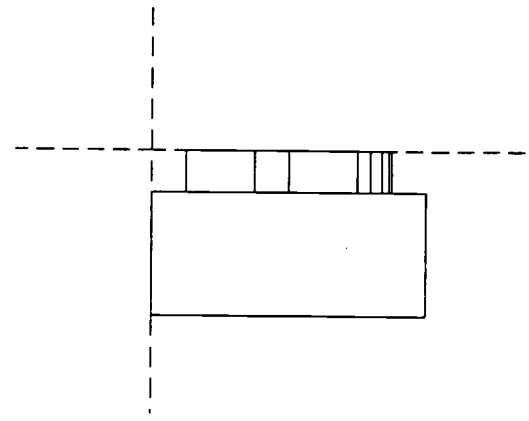

Figure 6

To return to the top view View → Get_View → top2.

At any time, you may perform a Show Path to view how the part will be cut. You can do this in any view. Simply, View → Show Path Pick a "Speed" and hit "Start"! You may cancel your show path by hitting the "Esc" key. You may also change speeds anytime by simply hitting a new number. (You must use the keyboard, not the mouse.)

Notice that the tools are not shown in my figures 5 & 6. As geometry increases, the tools clutter the screen. These may be shut off with Utilities → Display modes.

In the Dialog box, set "Draw Tools" to read "no tools". Accept.

STEP 4B: What if I made a mistake??

Any values you mistakenly or forgot to enter during the INSERT command (Offset, Tool, Level, Clearance, or Prof_top) may be corrected using a Property_Chg command. Property Change is accessed from Edit off the top menu bar. Notice that this is dimmed. The reason is, you must first GROUP the element(s) that need to be changed.

The GROUP is listed under the INSERT command. When you select GROUP, seven selection possibilities are available. You may form a group by:

Element: Selects one element at a time
Box: similar to window in most CAD packages
Range: Selects a range of elements (e.g. start range 2, end range 5)
Profile: Selects a series of sequential elements (e.g. our 2 x 2 perimeter or the .25 deep shoulder)
Step, Tool or Layer: Selects all elements associated with the step, tool or layer
Select All: Selects **everything** on the screen

Whatever the method for grouping (and there are always numerous), you will know a group exists by the little arrows placed at the mid-point of the elements. Also, the elements in the view window will be checked. Once the group is made:

Edit → Property_Chg → Toolpath

You are now looking at a dialogue box. You only have to change what you want to fix. You don't have to enter all the data! For example, if you wanted to change Level, click on "Level" and enter the new value. The N/C means "No Change". So, for example, if you wanted to change "Prof_top", first click the "N/C", turn it "On" and enter the value. The same is true for "Clearance". For offset, clicking the N/C brings up a sub-menu to chose Right, Left, or None. Notice you can even change the step that is cutting the profile!! You have a lot of power here. When done, hit "Accept". Then, you must click on Group → New Group to **cancel** the group. You ***must*** clear the group, it does not clear itself!!

Dimensional values of part geometry can be corrected with: Edit → Geo_Edit → Modify. The modify command works on one element at a time, therefore, no group is needed. Arcs, lines, or points are some of the elements that may be modified. You may change geometry data such as X, Y, or Z coordinates, angle, radius values, points of tangency, etc.

Machine sequence errors are corrected with the Order Path command. This will be discussed later.

STEP 5: Inserting the stock and centering the part

Let's draw the stock for this part. Stock is non-toolpath data. We will use the On Layer option of Insert to set up a layer to draw the stock. Let's go !

1. Insert → After → Element_Seq (either pick or enter the last element in your data base) → On Layer.

   In the dialog box, click on "Add Layer". Enter a number (I'll use 5) pick a color (I'll use green) and if you want, a line type. Accept. You now are working on layer 5. Just because it's non-toolpath doesn't mean there is no thickness! So, in the dialog box make sure you set a Level of -1.5 and turn on Prof_top and set it to 0. After all, our stock is 1.5" thick and already faced.

2. Rather than use the Geometry command, let's use the rectangle command to speed things up.

   Create → User_elements → Rectangle

   Enter X 0 Y0 as the "Rectangle corner" (Notice the Z is already -1.5). Length is 2.5 and the Width is 2.5 The angle is 0 and the corner radii are 0 Hit "Go". The rectangle (stock in our case) is drawn CCW. Figure 7. Notice SmartCAM leaves the rectangle in a Group when finished (See the arrows). You must click on Group → New Group to cancel this.

Enter X 0 Y0 as the "Rectangle corner" (Notice the Z is already -1.5). Length is 2.5 and the Width is 2.5 The angle is 0 and the corner radii are 0 Hit "Go". The rectangle (stock in our case) is drawn CCW. Figure 7. Notice SmartCAM leaves the rectangle in a Group when finished (See the arrows). You must click on Group → New Group to cancel this.

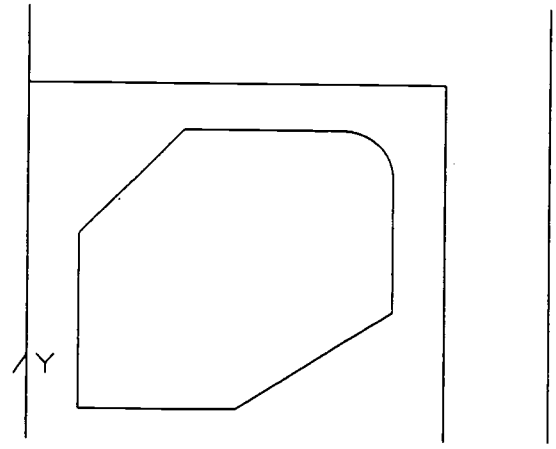

Figure 7

Let's now center the part in the stock. Group the part. The fastest way is to use the Step option of group and either pick step 2 from the view box or enter 2 in the dialog box.

Edit → Transform → Move

For "From point", the easiest thing to do is to click on "From 0". Notice, X0 Y0 Z0 fills in for "From point". For "To point": X .25 Y.25 Z0 will center the part. Notice there is no "GO" button. As soon as you enter sufficient data, the result triggers. We now have figure 8.

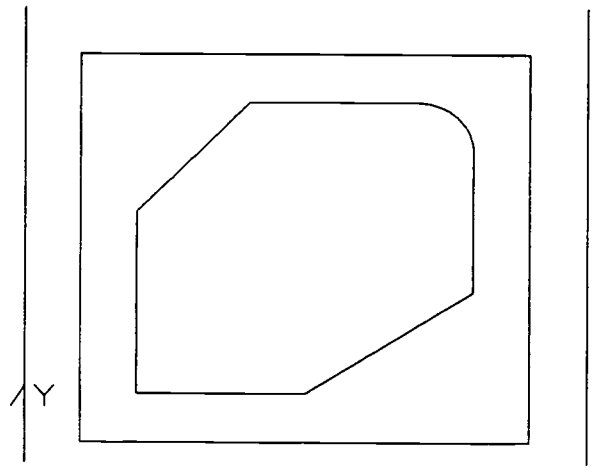

Figure 8

A comment on the numbers. The part is 2 x 2 and the stock is 2.5 x 2.5; so, to center the part from X0 Y0 we need to move .25 in both X and Y. What about the Z? If Z = 0 is the "From point", there will be NO Z movement providing that the "To point" for Z is also 0. In other words, if we made the "To point" Z = -.25, the part would move from Z0 to Z-.25, Not a good thing for this application. Group → New Group!

STEP 6: Roughing

Let's think about roughing this part. First, there is not much material to rough out. Two passes leaving a finish allowance (.020) will be the extent of the roughing. The two passes are: the 2 x 2 square (the perimeter) and the .25 deep shoulder. In addition to leaving .020 on the walls for a finish pass, we will take our pass for the shoulder at Z = -.23. This leaves .020 on the bottom surface.

1. Insert → Before → Step_Seq → 2
   This command will ensure that the roughing will occur before the finish.

There are other ways to set-up the insertion point.
Insert → After → Element_seq → 0
Obviously, if something occurs after element 0 (The origin) it will occur first.

Insert → Before → Element_seq → 1
Again, the roughing will occur first thing.

I don't care how you mark the insertion point as long as it is correct.

Now, let's set up the tool and its properties:
Click on "With step" and either enter 1 or pick step 1 from the view list.
Offset: right
Level: -.75 (we'll rough the perimeter first)
Prof_top: on and 0
Clear .25

A note on Profile top: This is now the roughing. The geometry for the roughing pass starts at Z 0, the top of the part.

2. If you like a lot of work, go into geometry and draw four lines to represent the roughing. But, there's an easier way:

Create → Geometry → Wall_offset In the dialogue box:

Enter the offset distance, which for us, is the finish allowance of .020. The cursor moves and prompts you to pick any element in the profile to be offset. Notice the offset side is set to mouse. Therefore, when you pick the 2 x 2 square DO NOT pick right on the lines, pick just to the side you want the offset to be. You only have to be close to the profile.

Now we have 4 new lines .020 from the finish pass at a Z_level of -.75.

Do a show_path and you will see the rough tool go into action first.

3. Now, let's rough the shoulder. For this we not only want to leave .020 on the sides, but .020 on the bottom as well.

Insert → After → step_seq → 1 (this ensures that the shoulder rough will occur after the perimeter rough)

Enter tool properties: step 1 , offset: right, Level: -.230 (notice the .020 allowance for finish on the shoulder bottom!) Clear and Prof_top are as before.

Create → Geometry → Wall offset

Enter the .020 wall distance and pick the shoulder. Again, pick near any one of the elements representing the shoulder profile, but on the side you want the offset to go. Figure 9 shows the offsets (roughing) completed.

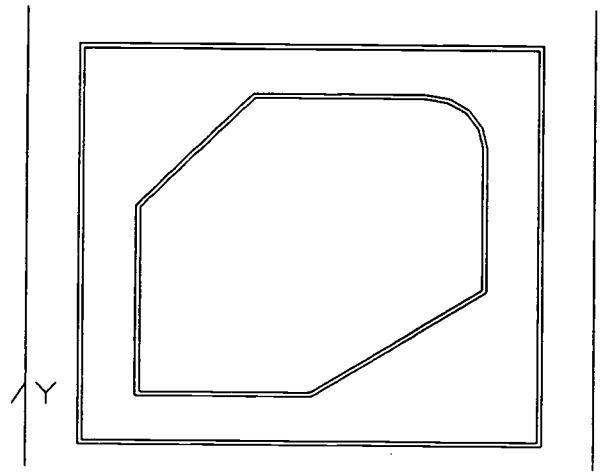

Figure 9

STEP 7: Lead in/out

Lead in/out is an edit command. They are performed using Geo_edit which lives under the Edit command of the top menu bar. Because this is an edit command we do not have to go through Insert to set up sequencing and tool properties. Also, angle 0 is no longer at the 3:00 position, rather, it varies depending on the profile.

Let's add a lead in and out to the roughing passes.

Edit → Geo_edit → Lead in/out

Notice you can perform a lead-in alone, a lead-out alone, or both simultaneously. Because the angle 0 is unique, we can do both at once. In the dialogue box:

Click on "Both"
Click on "Line"
Angle: 0 This means the lead in and out will follow the corresponding elements in the profile. For example, if the first element (which lead-in will follow) is horizontal, the lead-in will be horizontal.
Length: 1
Click on "Offset Match"

SmartCAM now has enough info and an * appears at "Select element in profile". So, first pick the square representing the roughing profile (any element will do) and the lead in and out appear. Then, pick the roughing profile representing the shoulder.

Now, let's perform the lead in and out for the finish profiles. For finish, we do not want offset match (explanation to follow). Therefore, turn off "offset match" and repeat the above selections for the two finish profiles. Lead in/out is now complete. Notice that the same length and angle values apply to the shoulder as to the perimeter. Why not!! You now have figure 10.

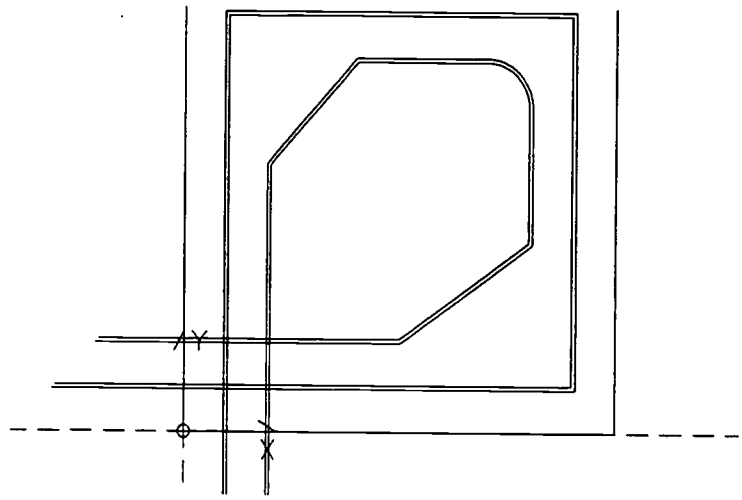

Figure 10

Important note on length and offset match. Be careful when assigning a length value. First, length controls whether or not the tool plunges into material. Therefore, the length must be sufficient to avoid plunging into material. Second, when lines are used for lead ins and lead outs, they are drawn with an offset of NONE. This causes the tool to angle into (or out of) the profile to break any corner burrs. If the lead in or out line is too short, the break will be too large, causing a chamfer. When we are roughing, there is no concern for deburring seeing that a finish pass is to follow. Therefore, we turn on "offset match" for the lead in and out for our roughing step. When we perform the lead in and out for the finish passes, we turn off "offset match". So, make sure you always review your work with Show_path.

Let's do it! First, get a closer look. View → Window to zoom in on the lead in/out areas (Figure 11). Now, perform a show path at a speed of 2. You will notice that the lead in and out for the roughing passes do not plunge into the stock and do not break edge. The lead in and out for the finish passes do not plunge into material, but do break edge and thus deburr the corners. Also notice that the break is resonable.

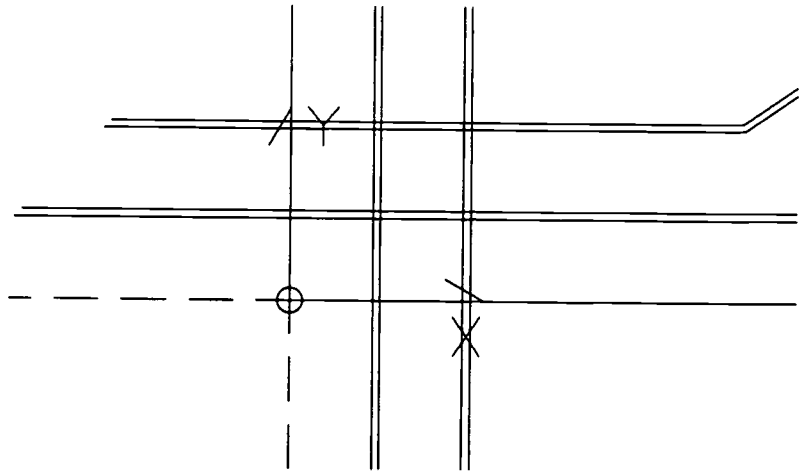

Figure 11

For the record, to lead in or out with an arc. Start by clicking on Arc. For angle, 45 works well and a radius of 1 will give decent results. You can play around with these values (using Undo) until you are happy. Also, lead in and outs using arcs are always drawn with an offset *matching the profile*. Therefore, arcs are good for blending surfaces.

STEP 8: Insert home point for step 1

Our TMC1000 locates 0,0,0 from the first tool. Therefore, seeing that step 1 uses tool 1, we must locate the first step in the correct start position. Tool changing after tool 1 does not have to be done from any specific point. So, don't worry about it.

Let's put in the home point for step 1. We will use X -1 Y 2.5 Z .5 for the home point.

Insert → After Element_seq 0

I hope this is making sense by now: After element 0 ensures the home point is first. Also note that this pushes the roughing down in the data base. That's O K, our sequence of events will come out correct: Tool home, rough, then finish!

Enter properties: with step 1, Level .5, clear .25
offset and prof_top are not applicable for points, so ignore the settings.

Create Geometry Point/Rapid

Enter an X of -1, notice you are being asked for a Y. Also, notice that an * appears next to the Y. Once you enter a Y value the point will trigger. Once the point

triggers, the Y clears but the X doesn't. So before you go ahead a re-enter your Y value, check your elements and see if you now have a point as element 1!!

STEP 9: Code

If you made it this far, the worst is over. Coding is the easiest but most important part of the job, as this is the instruction to a computer driven machine tool to cut your part.

From the top menu bar, Process Code

In the dialog box: For "Code file", use your graphics name with an extension of .NC For example, if I am working on DEMO1.PM4, and I have a job file called DEMO1.JOF, I would call my code output file DEMO1.NC

You need to enter the proper machine and template files:
For "Smf File" enter H:\tmc1000
For "Tmp File" enter H:\tmc1000

Hit start and the code file is created. This file is created automatically and therefore is saved. Be careful with your directories! Make sure all three files .PM4, .JOF, and .NC all go to the same directory, such as a:\ .

The only place where you can look at your code is in the Edit_Plus section from the main SmartCAM menu.

We're done! However, if you noticed, the finish pass on the shoulder bottom does not clean. The .5 dia endmill is not wide enough. Any thoughts on how you would fix this?

Successful completion of this technical module will be based on the students' successful completion of the following components:

a. Demonstrate how to input lines, arcs, and circles;
b. Demonstrate how to create roughing passes using (OFFSET);
c. Demonstrate how to create blend radii;
d. Demonstrate how to create lead-in lead-out moves; and,
e. Domonstrate how to change the view of the SmartCAM screen.

LSR-J4-LW1
Create Simple Part Profiles
Attachment 4: **MASTER** Laboratory Worksheet No. 1

Use SmartCAM to create the necessary tool paths to obtain CNC code required for manufacturing the part shown below. The material is aluminum.

1. You will need three steps using three tools:
   a. one .375 diameter endmill for roughing: 4 flute, 400 SFPM, .006 IPT
   b. one .375 diameter endmill for finishing: 4 flute, 800 SFPM, .001 IPT
   c. one .125 diameter endmill for cutting the "S": 2 flute, 600 SFPM, .003 IPT

   All tools are HSS. All endmills are center cutting. Use 1 inch for each tool's preset length. Use your judgement for all other data.

2. Cut the part from 2.5 x 2.5 x 1.0 stock. Center the part in the stock.

3. Step one starts at the home position: X -1.0, Y 2.5, Z .5
   X0, Y0 is the lower left corner of the stock, Z0 is the top of the stock.

4. Perform roughing by taking one pass around the 2 x 2 square and one pass around the shoulder. Leave .020 on all sides AND .020 on the surface of the shoulder for the finish passes. No roughing pass is needed for the "S".

5. Provide a lead-in and lead-out for all finish passes. However, a lead in/out is NOT required for the "S". Plunging into material is not allowed. However, plunging into material IS allowed for machining the "S".

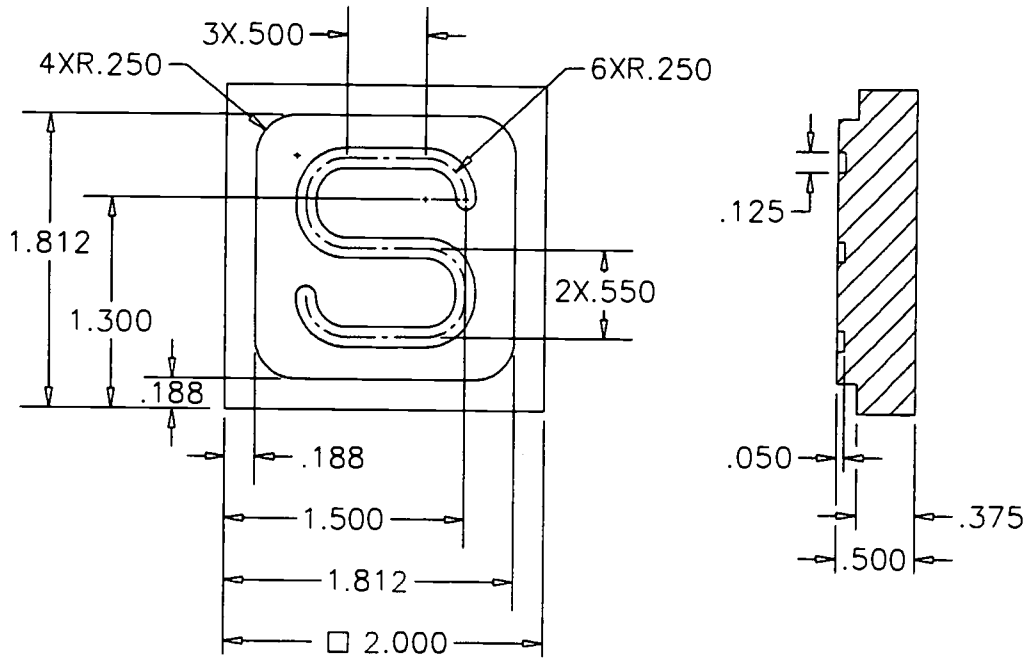

Hand in: This paper and graphic printout of part in isometric. Also, graphics file, job file, and code on a diskette.

LSR-J4-LW2
Create Simple Part Profiles
Attachment 5: **MASTER** Laboratory Worksheet No. 2

Use SmartCAM to create the necessary tool paths to obtain CNC code required for manufacturing the part shown below. The material is aluminum.

1. You will need four steps using four tools:
   a. one 1.000 diameter endmill for roughing: 4 flute, 400 SFPM, .008 IPT
   b. one .500 diameter endmill for finishing: 4 flute, 800 SFPM, .002 IPT
   c. one .250 diameter drill: 2 flute, 118° included angle, 225 SFPM, .004 IPR
   d. one .500 diameter counterbore: 2 flute, 225 SFPM, .006 IPR

   All tools are HSS. All endmills are centercutting. Set 1 inch for present length. Use your judgement for all other values.

2. Cut the part from 4.5 x 3.0 x 1.0 stock. Center the part in the stock.
3. Step one starts at the home position: X -1.0, Y 2.5, Z .5
   X0, Y0 is the lower left corner of the stock, Z0 is the top of the stock.
4. Leave .020 on the sides of the part for the finish pass.
5. Provide a lead-in and lead-out for all finish passes. Do not plunge into material.

Suggestion: Create the part in the 2nd quadrant (this makes the dimensions easier to use), using the lower right corner of the part as X0, Y0 and proceed CLOCKWISE. Then, create the stock in the first quadrant as is our usual procedure. Finally, move the part into the 1st quadrant, centering in the stock.

Hand in this paper and graphic printout of part in isometric. Also, graphics file, job file, and code on a diskette.

EXTRA CREDIT: The one inch mill will not fully clean the upper right corner of the part. Create the necessary tool pass(es) to complete the job. DO NOT waste machine time.

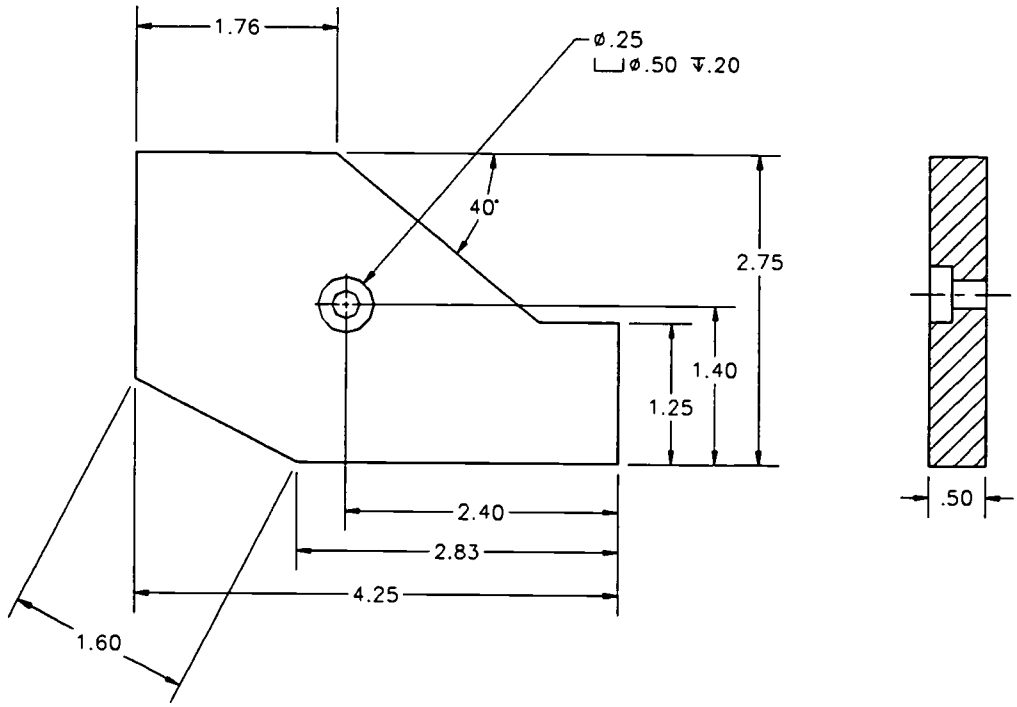
1.76
ø.25
⌴ø.50 ↧.20
40°
2.75
1.40
1.25
2.40
2.83
4.25
1.60
.50

LSR-J5-HO1
Create and Edit Complex Part Profiles
Attachment 1: **MASTER** Handout No. 1

Objective(s):

Upon completion of this unit the student will be able to:

a. Demonstrate how to input free form geometry in SmartCAM;
b. Demonstrate group editing commands;
c. Demonstrate how to change the path order of the part profile; and,
d. Discuss how SmartCAM creates CNC code.

Module Outline:

I. Create and Edit Complex Part Profiles
   A. Use trim profiles (GROUP_TRIM & PROFILE_TRIM)
   B. Clean up disconnected elements to an intersection (TRIM_EXTEND)
   C. Change tool properties
   D. Change geometry values (MODIFY)
   E. Arrange elements sequentially (CHAIN)
   F. Create chamfers
   G. Split elements in segments

Note: SmartCAM® commands are shown in caps.

Step by Step

The part we must produce involves using free form geometry in its creation. We will draw this outline much like a CAD drawing, then, trim the profile to the required configuration. We will need four tools for this job: Φ.75 endmill for roughing, Φ.500 endmill for finishing, Φ.25 drill, and Φ.375 counterbore. All tools are HSS. The endmills are center cutting and have four teeth. The part will be cut from 9 x 8 x 1 6061-T6 aluminum stock.

The machining of this part will be performed as follows:

Step 1: Using tool 1: Rough outside (face rough), then, rough Φ2.50 hole (pocket rough) leaving .020 as a finish allowance.
Step 2: Using tool 2: Finish outside perimeter and Φ2.50 hole profiles.
Step 3: Using tool 3: Drill hole.
Step 4: Using tool 4: Counterbore.

Enter SmartCAM graphic area and let's start.

STEP 1: Create job file

1. File → New You get a dialogue box asking for the name of the job file to be used. However, we have not as yet made one, so, click on "New JOF" to open the Edit Job Info dialogue box. In the dialogue box, leave all defaults except:
   Created by: Enter your name
   Machine File: MATSUURA
   Part Description: Free form geometry
   Material Desc: 6061-T6 Aluminum
   Notes: Up to you, whatever seems appropriate.
   Close → Save info before closing? → Yes

   You have only created Job Information. We must now create the steps with their tools.

   Refer back to demo 1 for information on creating the endmills. I will leave that part to you. Speed and feed data for .75 diameter endmill (roughing) is 400 SFPM and .005 IPT; for the .5 diameter endmill, 800 SFPM and .002 IPT. Additional data for the endmills (and hole tools) can be found in the job file printout following this narrative.

The following information creates the drill and counterbore tools.

2. File → Job File → Add/Edit step. The "Add/Edit Step" dialogue box appears. Notice "Step" defaults to step 3 and we are in New_Step mode. There are two key areas for defining a step. **TI ID** (Tooling Identification) and **Op ID** (Operation identification). TI defines the type of tool (endmill, drill, etc.), diameter, length, and so on. Op ID defines the type of operation (milling, drilling, etc.), roughing or finishing, speeds and feeds.

Click on "TI ID". Now click on "Edit Page". The "Add Tooling Page" appears. In the dialogue box:

Hole Tools: Click on
TI Section: Click on "Twist Drill"
Accept

Now the "Tooling" dialogue box appears. "Tooling ID" defaults to Twist Drill.1, this is OK. In the dialogue box:

Description: .25 dia drill
Comment: Drill
Tool Diameter: .25
Overall Length: 3.0
Number of Flutes: 2
Tool_Matl: HSS
Flute length: 2
Tool Point Angle: 118°
Leave all others with either
no entry or as defaulted
Close → Save info before closing → Yes

Back at the Add/edit step dialogue box, enter a "Present Length" of 1.5

Now, let's deal with operation ID. Click on "Op ID", then click on "Edit Page". The "Add Operation Page" appears. In the dialogue box:

Hole Processes: ON
Op Section: Drilling
Accept

Now, the "Operation" dialogue box appears. "Operation ID" defaults to DRILLING.1, this is OK. Before we proceed, we must make speed and feed decisions. The part material is 6061-T6 Aluminum. Checking Machinery's Handbook, or suitable source, indicates that for drilling aluminum with a .250 dia HSS drill, a speed of 220 Surface Feet per Min. and a feed of .001 inches per revolution are recommended. So, In the dialogue box:

Speed SFPM: 220 RPM: see note
Primary Feed IPR: .001 IPM: see note IPT: see note

Note: RPM (revolutions per minute), IPT (inches per tooth) and IPM (inches per minute) all update automatically following entry of SFPM and IPR data.

All other items, accept as defaulted.
Close. → Save info before closing? → Yes

You are now back to the "Add/Edit step" dialogue box. Click on "New Step". Step 4 registers. Repeat the same procedure as above for the counterbore step. The counterbore step includes the following data: In the "Add Tooling Page", TI Section = Counterbore; Tool diameter = .375, Overall length = 3.0, Preset length = 1.5, Pilot diameter = .125, Pilot length = .25, 2 Flutes; in the "Add Operation Page", Op Section = counterboring; For counterboring with a .375 dia HSS tool use a speed of 220 Surface Feet per Min. and a feed of .003 inches per revolution.

Following completion of the fourth step, save your work. File → Save as. In the dialogue box:
P.M. file: a:\demo2 (P.M. means process model, your graphics)
Job File: a:\demo2
Make sure "both" is ON. This will save graphics and job file together.

A print out of the Job file can be found at the end of this narrative.

STEP 2: Setting up view screen

1. Let's set the screen size to be compatible with our drawing dimensions:

   VIEW → ENVELOPE In the dialogue box:
   MINIMUM: X -1 Y -1 Z -1
   MAXIMUM: X 9.5 Y 8.5 Z 1 (Stock size is 9 x 8 x 1)

   Remember: Use mouse to click on any value to enter or change.
   Note that min values need a negative sign !!

   When all values are entered, hit ACCEPT.

2. Let's establish this envelope as the base view, then give the view a name to facilitate changing views. VIEW → BASE. Then, VIEW → NAME VIEW → TOP2 <ENTER>

3. We will now set some display parameters. Utility → Display modes
In the dialogue box, accept all defaults except:
Thickness: turn on
Draw tools: Set to "no tools"
Accept.

STEP 3: Free form geometry for perimeter

1. In SmartCAM we draw the FINISH profiles first. In other words, simply draw the part as shown. Therefore, we need to call up the finish step (step 2 using tool 2) and assign the appropriate properties.

   You will note that the geometry has many undefined points of tangency. We will draw the part in free form style, then trim to the required configuration.

   When performing free form geometry, showing the tool on each geometry is confusing. This is why we turned off the display of tools using display modes.

   The part will be cut in a clockwise direction. Note that the thickness of the part is .500.

   INSERT → With Step → Click on step 2 (in lower right of screen)
   Enter the properties: OFFSET: Left
   LEVEL: -.50
   CLEAR: .25
   PROF_TOP: 0 (Click it on first)

   Note: The Sequence segment (Before/After) is meaningless when we are entering the first elements. So, we simply accepted the default of After element 0

2. Now it's time for geometry. CREATE → GEOMETRY → LINE

   Remember, the dialogue box is mouse active. You can click on any blank to enter data. Note that the Z has already been defaulted to -.50 This was set at Level during Insert.
   Enter: Start Point: X 0 Y 0
   End Point : X 0 Y 4

   The first line is drawn. Notice that when SC is close to drawing your line, an asterisk (*) appears. This means that one more piece of data will trigger a line.

3. For the second element, an arc, the end point is not defined! The arc starts tangent to a line (the one we just drew) and ends tangent to another line. Therefore, we can draw a circle and trim later. A good rule of thumb is, if a center of an arc is defined, create a circle and trim later. This arc's center is at X .38 and Y 4

   Geometry → Arc
   In the dialogue box:

Direction: CW
Radius: .38
Center point: X .38 Y 4
Click on "Full Arc" to draw the circle
Reset

Whenever you create an arc (circle) make sure you RESET the dialogue box. If not, you remain in the Full Arc mode forever!

4. The next element is a line which is tangent to two arcs. We can not draw the line without the second arc. So, seeing that the center of the second arc is defined at X 4.25 Y 4.75 let's make another circle:

The arc dialogue box is already present:

In the dialogue box:
Direction: CW
Radius: .75
Center point: X 4.25 Y 4.75 (you can enter 5.5 - .75 and SmartCAM will calculate the answer)
Click on "Full Arc" to draw the circle.
Reset

The screen now looks like fig. 1

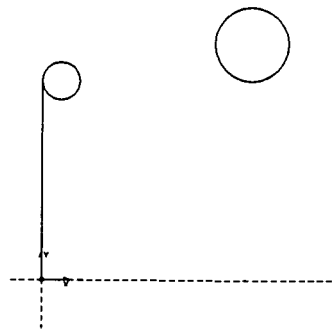

Figure 1

5. Now the tangent line.

Geometry → line:

In the dialogue box, find the words "Tan Arc" . Under Tan Arc you will see Start: and End: What this means, is, you may draw a line which STARTS

tangent to an arc or circle and/or ENDS tangent to an arc or circle. In our case the line starts tangent to the .38 R and ends tangent to the .75 R.

In the dialogue box:

Under the Tan Arc, click on the word "Start:"
Select the .38 R circle. (Pick the circle in the area where the line is tangent. That is, the 12:00 quadrant of the circle.
Click on the work "End:" (It probably will default anyway)
Select the .75 R circle. (Pick the circle in the area where the line is tangent. That is, the 12:00 quadrant of the circle.)

The line is now drawn. See fig 2

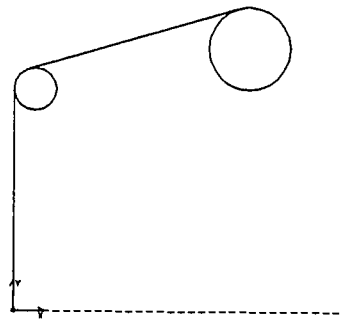

Figure 2

6. The next element is another .75 R arc, but, the direction is CCW. Again, a center is defined so we will draw a circle.

Geometry → Arc

In the dialogue box:

Direction: CCW (Remember our cut direction)
Radius: .75
Center point: X 5.75 Y 4.75 (you can enter 5.5 - .75 and SmartCAM will calculate the answer)
Click on "Full Arc" to draw the circle
Reset

7. The next arc is a 1.50 Radius. It starts tangent to the previous arc and ends tangent to a vertical line. The center X is known, but the center Y is not defined. If only the vertical line was there, we could slap in the arc using start tan and end tan. So, let's put the line in:

Geometry → line

Start point: X 8.0 Y 5.0
End point: X 8.0 Y 0

The line is shown in fig 3

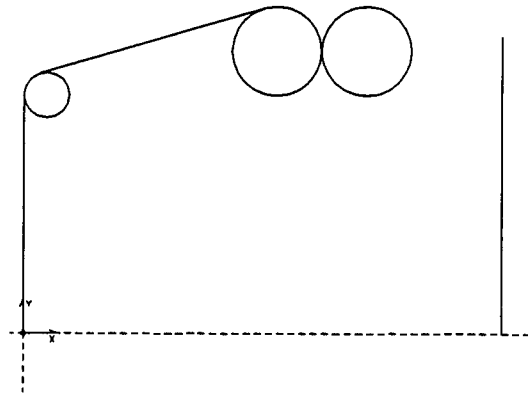

Figure 3

Note that we have drawn the line keeping our cut direction the same. We don't know the exact start point in Y, but we can trim later.

8. Now the 1.5 R

Geometry - arc

In the dialogue box:
Direction: CW
Radius: 1.5
Under "Tangent El" -- Click on S: and pick the .75 R circle
Click on E: and pick the vertical line drawn in step 7
The arc is drawn.

The arc is shown in fig. 4

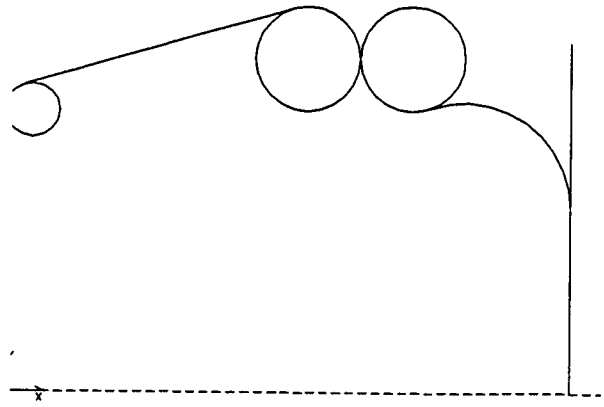

Figure 4

For the record, this works similar to the line command. The "Tangent El" (tangent to an element) section is for drawing arcs tangent to existing geometry. The S: means the Start of the arc, the E: means the end of the arc, and the I: is if an intermediate point is known. Using all three S,E,I you could draw an arc tangent to three lines.

Always remember, data in these dialogue boxes can be entered in any order. Just click on the info you know and enter data. For example, you may know an arc with a know R and direction. It may start tangent to either an arc, circle or line, but it may end at a known End Point (X,Y) It DOES NOT HAVE TO END TANGENT TO SOMETHING!! So, study your geometry well. DON'T let SmartCAM force you into putting in data you do not know.

9. Need a line from X 8, Y 0 back to origin.

Geometry - Line

In the dialogue box:

Start point: Click on words "start point" and pick end of the last line.
(The coordinates appear: X8 Y0)
End Point: Enter X 0 and Y 0

10. Need 1.75 R circle

Geometry - Arc

In the dialogue box:

Direction: CW (Remember our cut direction)
Radius: 1.75

Center point: X 2.75 Y 0.75
Click on "Full Arc" to draw the circle
Reset

11. Need fillet R of .5

Edit → Geo_edit → Blend

In dialogue box:
Set inside Radius to .5
Click on first element
Click on second element

The free form geometry for the outside perimeter is complete. See fig. 5

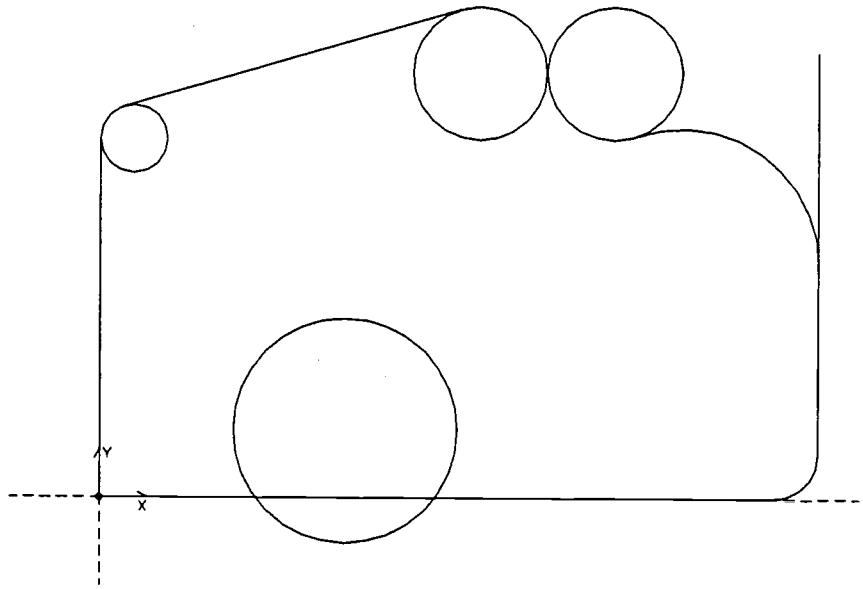

Figure 5

STEP 4: Trimming the outside profile

Now is the time to trim the outside profile. SmartCAM has two commands for trimming: Profile_trim and Trim/Extend.

Let's do **Profile_trim** first.

Profile trim acts upon a range of elements, therefore, a group is required. The command then decides if the profile is to be trimmed to the left or the right, then trims the profile into a continuous path. This command is more powerful than

trim/extend command. The trim/extend command works on only two elements at a time and may take two or even three iterations to trim completely.

However, profile trim has a few pit falls. As you can only trim to the left or right, you must trim your path in stages.

In addition, possible trim failures can occur if:

a. The elements are not grouped correctly;
b. Z levels vary among the elements; or
c, The direction of cut varies among the elements.

However, because it is a great time saver, it is always the first choice. If the frustration level gets too high, go to Trim/Extend.

Let's look at our first group of elements to trim. Starting from the first vertical line, we notice the .38 R must be trimmed to the right. The tangent line follows which is OK. Then we have a .75 R CW arc which needs to be trimmed to the right of the profile. Next is the .75 R CCW arc, but, this needs to be trimmed to the **left** of the profile. Therefore, we must stop here to perform our first trim group.

Group - Element

My rule of thumb is to pick one element before the first trimmable and continue picking elements up to one beyond the last trimmable. Therefore, pick the vertical line, .38 R, Tangent line, .75 R CW, and the .75 R CCW. See fig 6

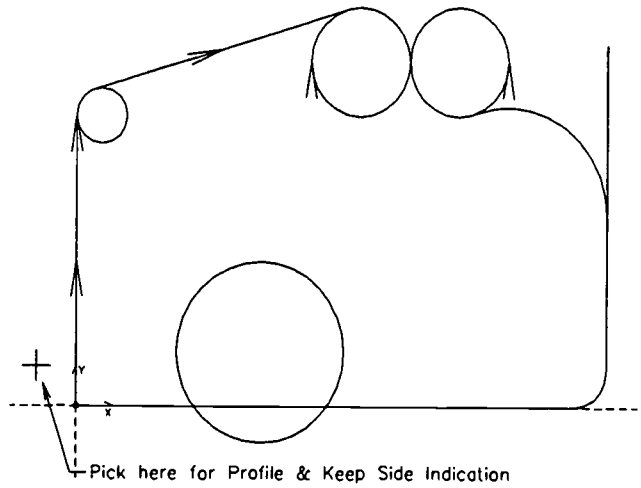

Figure 6

Edit - Geo_edit - Profile_trim

In the dialogue box:

Click on "Profile and keep side indication". Turn Snap Off and pick a point near the beginning of the vertical line and to the left of it. (See note which follows. The pick point is shown in fig. 6)

Leave intersection tolerance at .001. (This is only used if your geometry has gaps such as a translated AutoCAD drawing).

GO

The trim occurs. See fig 7.

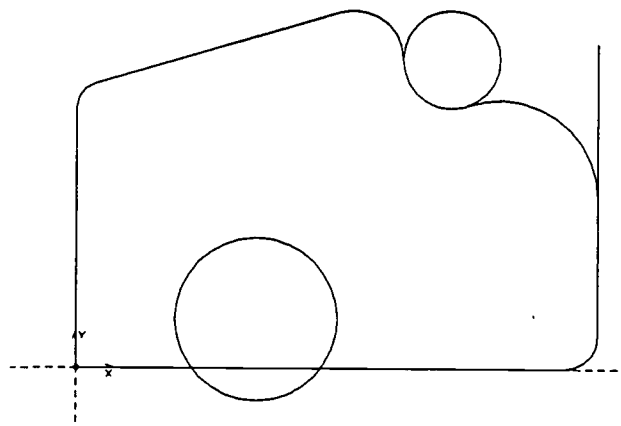

Figure 7

Note: Profile and keep side indication is doing two things. You are picking near the FIRST element in this trimmable group. That is, you are telling SmartCAM where to begin the profile. Second, you are telling SmartCAM what SIDE of the profile to KEEP. We want to trim to the inside or right of the profile, therefore, we wish to keep the outside or left of the profile.

Before you hit new group to cancel the group, note that the direction of the .75 R CCW arc has been changed as a result of the trimming!! If this was not corrected before the next profile trim was tried, you would fail miserably!! That is, the arc direction is no longer compatible with the direction of cut of the 1.5 R and next line.

So, Edit → Geo_edit → Modify

Pick the arc, a dialogue box appears. Change the arc's direction to CCW. Accept

Now we can group the next batch of trimmables:

Group → New Group → element

Pick the .75 R CW arc, the .75 R CCW arc, the 1.5 R, the vertical line, and the .5 blend Radius. Remember, one element before the first trimmable and one element beyond the last trimmable. The group is shown in fig. 8

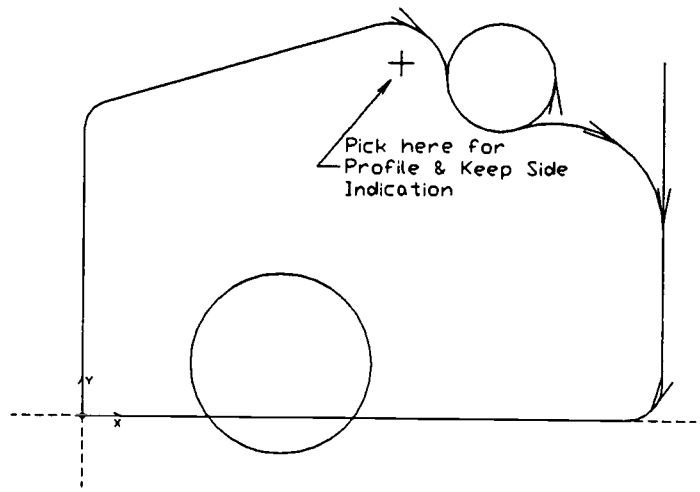

Figure 8

The 1.75 R and the last horizontal line must be trimmed to the left, and must be done as our next trimming.

Edit → Geo_edit → Profile_trim

In the dialogue box:

Click on the **words** "Profile and keep side indication" to get coordinate mode.

Make sure snap is off

Pick a point just under the .75 R CW element (see fig 8) [This indicates we will keep to the inside or right of the profile]

Leave intersection tolerance as .001

GO

We now have fig. 9

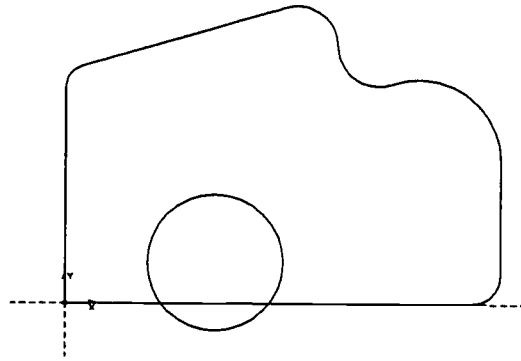

Figure 9

Finally, Group → New Group → element

Pick the .5 blend R, the 8 inch horizontal line, the 1.75 R circle, and the first vertical line.

Perform the profile trim, picking a point to the left or outside of the .5 R, indicating the profile is trimmed on the inside.

GO and the profile is trimmed. See fig. 10

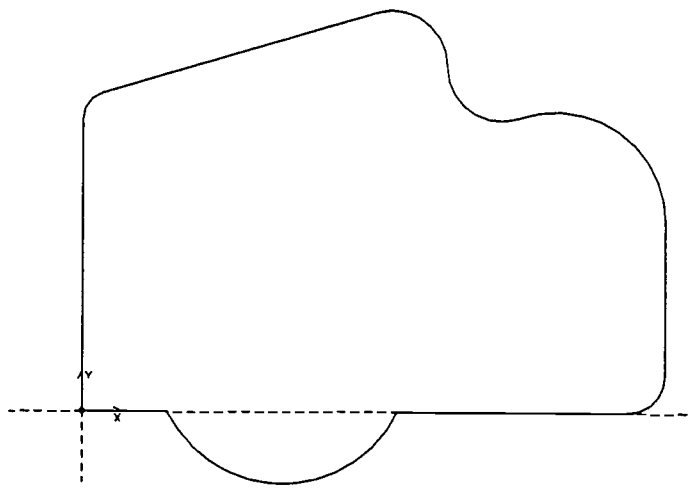

Figure 10

Trim/Extend Command --

A good alternative to profile trim is trim/extend. This command is performed by picking two elements. The first element trims with respect to the second. You may need several iterations to get the final geometry you want, but it may be less frustrating than profile trim.

Fig. 10A shows the pick points for trim/extend.

Edit → Geo_edit → Trim/extend

In the dialogue box, you see: Select First element, select second element, and the which solution box. Note also that the keep side is determined by the mouse. This means, that WHERE you pick an element, is WHAT gets kept!

Confusing? That is why there is a "which solutions" switch. Turn this on (x in the box) before you pick the two elements and SmartCAM will provide a which solution box. You may toggle through by hitting NEXT until the best solution appears. Remember, you may need to perform more than one trim to accomplish your task.

Let's do the .38 R

Make sure you have a cursor for select first element and pick the .38R arc as shown in fig. 11. Now, for select second element, pick the vertical line. The arc trims as shown in fig 11. Note that this is not complete, therefore, pick the arc again (same location as you just did) and now pick the tangent line. The trim occurs.

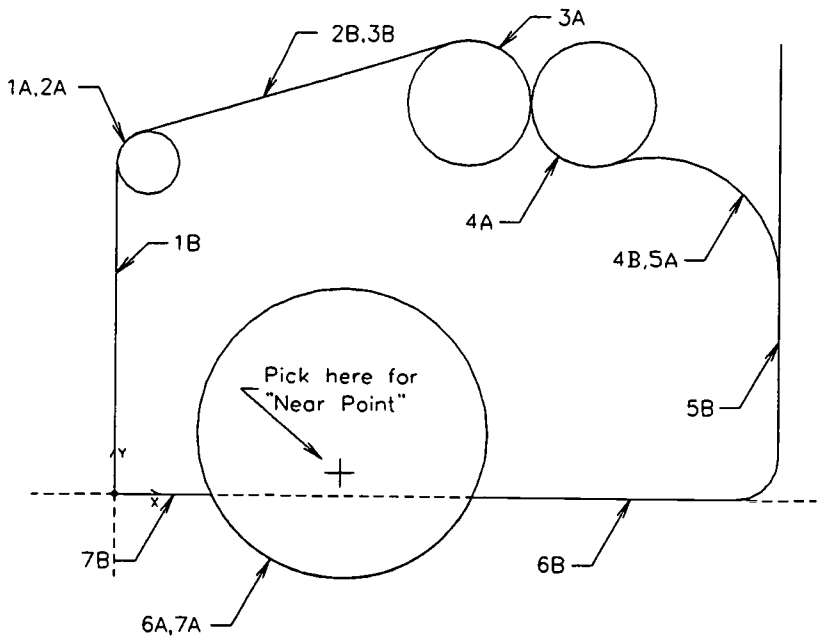

Figure 11

Figure 11 walks you through the entire part. Please note that *what to pick* as well as *where to pick* is documented.

Legend

1A,1B: The 1 means first pick group	The A means first element picked
	The B means second element picked
2A,2B: The 2 means second pick group	The A means first element picked
	The B means second element picked

Etc.

You will do fine until you reach the horizontal line going through the 1.75 R. No matter what you do, you will be forced to redraw part of the horizontal line, unless you split the line in two parts.

Edit - Geo_edit - Split

In the dialogue box:

Click on "Nearest point"
Click on the words "Near Point" to go into coordinate mode, shut off snap, and pick a point somewhere in the middle of the 1.75 R circle. (See fig. 11)
Click on "Select Split Element" and select the horizontal line.
The split occurs.

You may now proceed with trimming as shown in fig 11.

STEP 5: Checking the cutter path of the trimmed profile

If a Show path is performed, you may notice that your trimmed profile is out of sequence and/or the tool cuts on the wrong side (wrong offset).

SmartCAM's Order Path - chain command is the fastest way to link unsequenced elements into a continuous path.

Edit - Order Path - Chain

The dialogue box reads "select an element in profile". Simply pick the first vertical line we drew and the elements will be arranged in order. Perform a show path to verify.

You will find that Chain does not fix offset problems. This must be done using Property_chg.

Group → New Group → Profile Pick outside profile to form group. (Why waste time picking specific elements for change, when the whole profile wants the same offset.)

Edit → Property_chg → toolpath

In dialogue box:
Change offset to left
Accept

Perform show path to verify.

STEP 6: Cutting the 2.50 diameter hole

We will decide to cut the large hole in a CCW direction. Therefore, the tool and offset remain unchanged from the outside perimeter. The Z level is the same and we will keep Prof_top and clearance the same. Therefore, we can go right to the Geometry command.

Geometry → Arc

In the dialogue box:
Direction: CCW (Remember our cut direction)
Radius: 1.25
Center point: X 2.75 Y .75
Click on "Full Arc" to draw the circle
Reset

A word on full arcs (circles): SmartCAM will draw these starting at the 3 o'clock position. This is unchangeable! The significance of this will be realized when the Lead in/out is added.

STEP 7: Drill and Counterbore.

INSERT → After → Step_seq 2 → With Step 3
Enter the properties: LEVEL: 0
CLEAR: .25

For hole operations (e.g. drilling and counterboring), offset and prof-top are not used. With prof_top out of the picture, how does the system know where the drilling **begins**? The answer is, the Z level. The **depth** of the hole will be entered in the "hole" dialogue box.

Create → Geometry → Hole

In the dialogue box:

Level and Clearance should be as set during INSERT
Click on "Full_Depth" and enter .55 (.5 is the part thickness, and we add an extra .05 to ensure clearing)
Click on "Hole Point" and enter X = 6 and Y = 1.75
The hole element appears.

Please note, that the element (hole) is triggered when the coordinates are entered. So, be careful to watch your element listing for the hole element. Also, when full depth is used, SmartCAM will ensure that the full diameter of the drill goes the depth entered, while ensuring that the drill point clears.

Let's do the counterbore.

INSERT → After → Step_seq 3 With Step 4
Enter the properties: LEVEL: 0
CLEAR: .25

Create → Geometry → Hole

In the dialogue box:
Level and Clearance should be as set during INSERT
Click on "Tip_Depth" and enter .10.
Click on the words "Hole Point" and click on the hole element you just made!
The hole element (counterbore this time) appears.

Note that Full_Depth is **not** an option for Counterboring. A counterbore tool is flat. Therefore, the bottom of the tool, or tip, becomes the program point.

In the top view, the drill and counterbore appear simply as a "cross". If you look in your element listings, however, you will see that there are two hole elements, one for the drill and one for the counterbore. If you change your view to a front view, you will see a line showing the path the drill (and counterbore) will cut through the part. You will notice that the line extends beyond the bottom. This is SmartCAM compensating for the drill point. Do a show path! Also, perform a show path in the front view with Show Tool set at "Draw End". This will clearly show what the drill and counterbore are doing.

STEP 8: Inserting stock and centering the part

Let's draw the stock for this part. Stock is non-toolpath data. We will use the "on layer" option of Insert to set up a layer to draw the stock. Let's go!

Insert → After → Element_Seq (either pick or enter the last element in your data base).

Now click on "On Layer"

In the dialogue box, click on "Add Layer". Enter a number, I'll use 5, enter a color (I'll use white) and if you want, a line type. Accept. You now are working on layer 5. Just because it's non-toolpath doesn't mean there is no thickness! So, in the dialogue box make sure you set a Level of -1 and turn on Prof_top and set it to 0. After all, our stock is 1 inch thick.

Rather than use the Geometry command, let's use the rectangle command to speed things up.

Create → User_elements → Rectangle

Enter X 0 Y0 as the start corner (Notice the Z is already -1). Length is 9.0, the Width is 8.0, the angle is 0, and the corner radii are 0. Hit Go, the rectangle (stock in our case) is draw CCW.

Notice SmartCAM leaves the rectangle in a Group (See the arrows). You must hit Group → New Group to cancel the group.

Let's now center the part in the stock. Group the part. The fastest way is to use the Step option of group and pick steps 2, 3, and 4 individually from the view box.

Edit → Transform → Move

For from point, the easiest thing to do is to click on From 0. You now get From point: X0 Y0 Z0. For To point: X .50 Y1.75 Z0 will center the part. A comment on the numbers: the part is 8 x 6.5 (don't forget the 1.75 R on bottom) and the stock is 9.0 x 8.0; so, to center the part from X0 Y0 we need to move .5 in X. For Y, 8 minus 6.5 is 1.5. 1.5 divided by two is .75. We must move the part .75 plus the amount we are below zero. Therefore, 1 + .75 is the move.

The stock is shown centered in fig. 12.

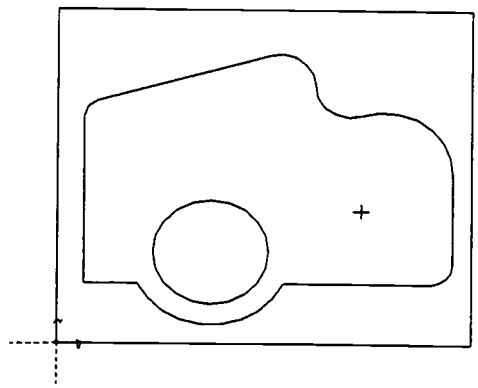

Figure 12

A comment about the Z. If Z = 0 is the From point, there will be NO Z movement providing that the To point for Z is also 0. In other words, if we made the to-point Z = -.25, the part would move from Z0 to Z-.25. Not a good thing for this application.

STEP 9: Roughing

Let's think about roughing this part. First, we must rough around the perimeter of the part. Then we must rough the 2.50 dia hole. The perimeter is a FACE roughing, and the 2.50 dia hole is a POCKET roughing. We will use SC's Process → rough for the job.

Insert → Before → Step_Seq 2

This command will ensure that the roughing step will occur before the finish step.

There are other ways to set-up the insertion point.

Insert → After → Element_seq 0

Obviously, if something occurs after element 0 (The origin) it will occur first.

Insert → Before → Element_seq 1

Again, the roughing will occur first thing.

I don't care how you mark the insertion point as long as it is correct.

Now, let's set up the step and its properties:

Click on "With step" and either enter 1 or pick step 1 from the view list. Offset and level are determined by SC during roughing, therefore, the setting is not read. Prof_top on and 0 Clear .25 (Offset and level are ignored during roughing, but prof_top and clearance are included)

Process → Rough → Face

Before we go to far, notice that our part is in the way of the face roughing and if not accounted for would be wiped out! Therefore, we must group the outside profile of the part as an island before we rough.

Group → Profile → Pick outside perimeter

Now, seeing that we have an island, we would like to include a semi-finish or "final island pass" as part of our roughing.

Click on "Linear Parameter". In the dialogue box:
Click on "Final pass"
Accept

Back to the face roughing dialogue box:

Face: Zig Zag	Outside Boundary: pick the stock	First pass level: -.25
Click on "Group Island"	Width of cut: .70	Depth of cut: .25
	Pass Angle: 0	Final pass level: -.5
	Finish Allowance: .020	
	Boundary Clearance: 0	
Leave all other parameters at their defaulted settings or values		
GO		

The roughing occurs.

Now let's rough the 2.50 diameter hole:

There is no island involved, so make sure you have no groups active. Group → New Group.

Also, Click on "Spiral parameters" and ensure that "Final island pass" is **off**.

Process → Rough → Pocket

In the dialogue box:

Pocket: Spiral	Outside Boundary: pick the profile	First pass level: -.25
	Width of cut: .70	Depth of cut: .25
	Pass Angle: 0	Final pass level: 0.5
	Finish Allowance: .020	
Leave all other parameters at their defaulted settings or values		
GO		

The roughing occurs. Make sure you check you views. The front view clearly shows the two pass for depth of cut.

STEP 10: Lead in/out

Lead in/out is an edit command. They are performed using Geo_edit which lives under the Edit command of the top menu bar. Because this is an edit command we do not have to go through Insert to set up sequencing and step properties. Also, angle 0 is no longer at 3:00, rather it is a function of the profile.

Edit → Geo_edit → Lead in/out

Notice you can perform a lead in alone, a lead out alone, or both simultaneously. Because the angle 0 is unique, we can do both at once. When do we use line and when do we use arc? A good rule of thumb is if the first element is a line, then lead in with a line. If the last element in the profile is a line, then lead out with a line. If the first element is an arc, then lead in with an arc. If the last element in the profile is an arc, then lead out with an arc. However, if a line is split in two and it is necessary to blend these two lines during lead in and lead out, you must use arcs. You will always know the first and last elements by either watching your show path or using Utilities → Element_data to find which element is which. For the outside profile, we can lead in and out with a line.

First, let's unclutter the screen by masking step 1. Utilities → Show/Mask.

In the dialogue box:
- Click on "hide"
- Click on "step"
- 1 <Enter>
- Accept

Edit → Geo_edit → lead in/out

In the dialogue box:
- Click on "line"
- Click on "both"
- Angle: 0. This means the lead in and/or out will follow the profile.
- Length: 1
- "line offset match" is OFF

Click on "Select element in profile" and select the outside perimeter. The lead in/out appears.

Repeat the procedure for the 2.50 diameter hole. However, we must lead in and out with arcs. Start by clicking on Arc. For angle, 45 works well. For radius, 1 will give decent results. You can play around with these values (using Undo) until you are happy. Figure 13 shows the results in a windowed view. Notice, for the large hole, the lead in and out occur at the 3:00 position.

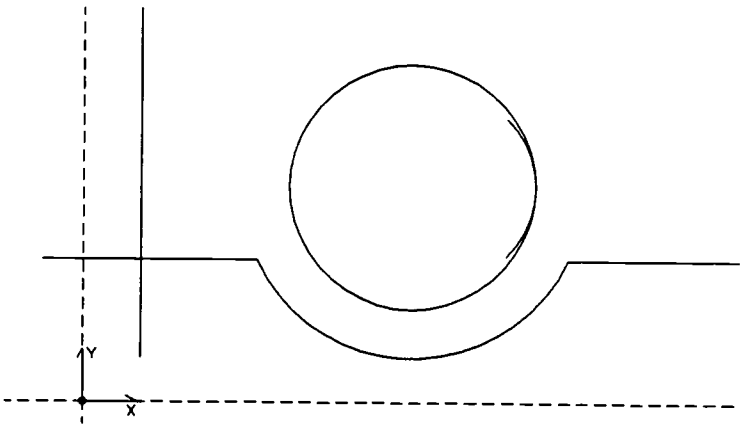

Figure 13 (Roughing step masked for clarity)

STEP 11: Insert tool home point for step 1

We will use X -1 Y 2.5 Z .5 for the tool home point.

Insert → After → Element_seq 0. I hope this is making sense by now--After element 0 ensures the tool home point is first. Also, note that this pushes the roughing down. That's O K, our sequence of events will come out correct. Tool home, rough, finish, drill, and counterbore!

Enter step properties: with step 1, Level .5, clear .25

Offset and prof_top are not applicable for points, so ignore the settings.

Create → Geometry → Point/Rapid

Enter an X of -1, notice you are being asked for a Y. Also, notice that an * appears next to the Y. Once you enter a Y value the point will trigger. Once the point triggers, the Y clears but the X doesn't. So before you go ahead a re-enter your Y value, check your elements and see if you now have a point as element 1!

STEP 12: Code

If you made it this far, the worst is over. Coding is the easiest but most important part as this is the instruction to a computer driven machine tool to cut your part.

Process → Code

For output file, when using the Matsuura, use your graphics name with no extension. For example, if I am working on A:\DEMO2.PM4, and I have a job file called A:\DEMO2.JOF, I would call my code output file A:\DEMO2

You need to enter the proper machine and template files.

For smf file enter H:\matsuura

for tmp file enter H:\matsuura

Hit start and the code file is created.

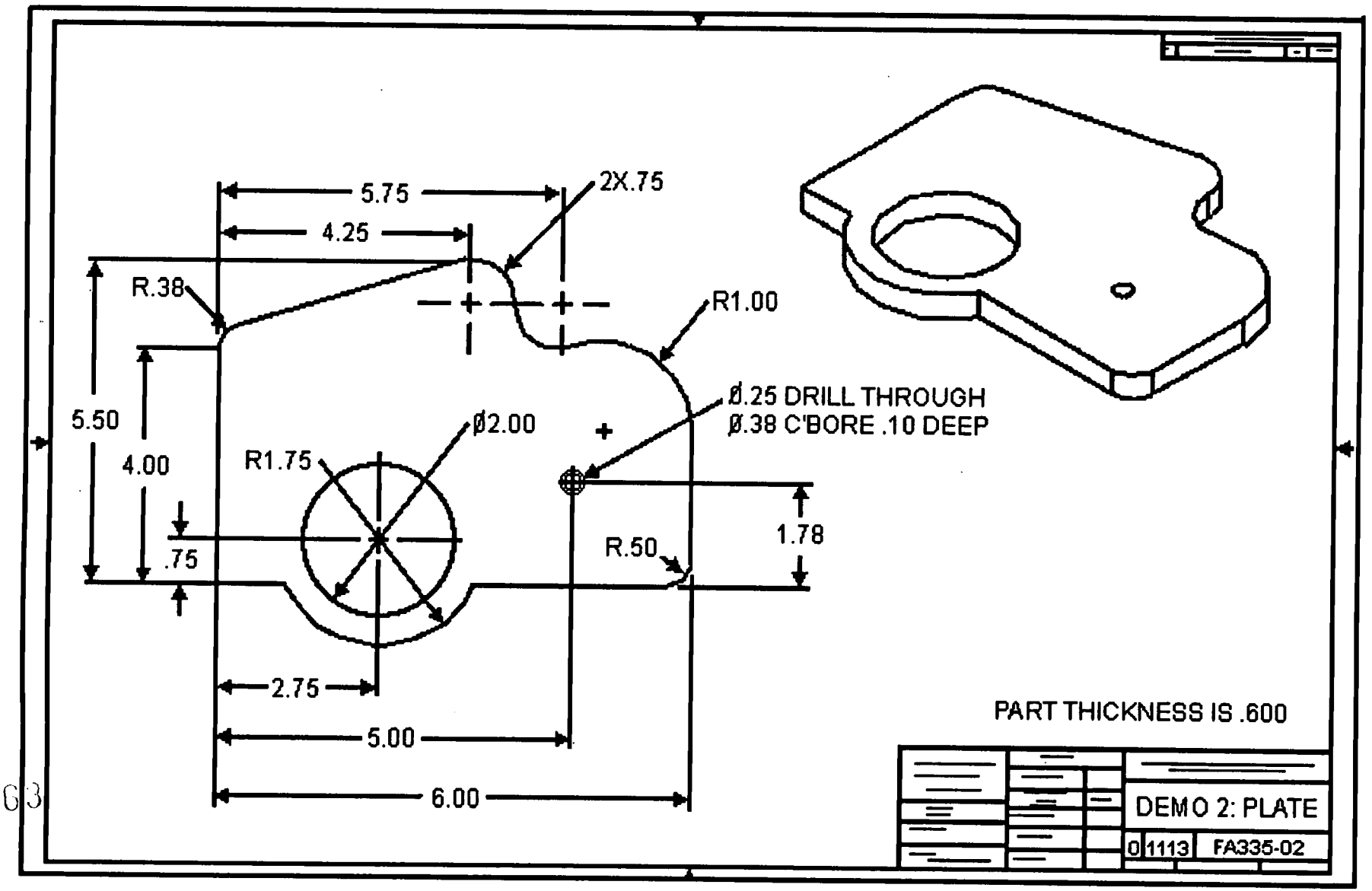
5.75
4.25
2X.75
R.38
R1.00
Ø.25 DRILL THROUGH
Ø.38 C'BORE .10 DEEP
5.50
4.00
Ø2.00
R1.75
.75
1.78
R.50
2.75
5.00
6.00
PART THICKNESS IS .600
DEMO 2: PLATE
0 1113 FA335-02

Successful completion of this technical module will be based on the students' successful completion of the following components:

a. Demonstrate how to use editing commands to trim profiles into continuous toolpaths;
b. Demonstrate how to modify geometry and tooling properties;
c. Demonstrate how to create a continuous profile using CHAIN;
d. Demonstrate how to split elements; and,
e. Demonstrate how to create chamfers.

Note: SmartCAM® commands are shown in caps.

ERIC

LSR-J5-LW1
Create and Edit Complex Part Profiles
Attachment 4: **MASTER** Laboratory Worksheet No. 1

Use SmartCAM to create the necessary tool paths to obtain CNC code required for manufacturing the part shown below. The part is .500 inches thick. The material is Aluminum.

1. You will need five steps using five tools:
   a. One .375 diameter endmill for outside roughing: 4 flute, 400 SFPM, .006 IPT;
   b. One 7/16 diameter drill for "roughing" the .5 dia hole: 2 flute, 118° included angle, 225 SFPM, .006 IPR;
   c. One .250 diameter endmill for finishing the outside profile and .5 dia hole: 4 flute, 800 SFPM, .001 IPT;
   d. One .156 diameter drill: 2 flute, 118° included angle, 225 SFPM, .004 IPR; and,
   e. One .375 diameter counterbore: 2 flute, 225 SFPM, .004 IPR.

   All tools are HSS. All endmills are center cutting. Use 1 inch for each tool's preset length. Use your judgment for all other data.

2. Cut the part from 3.0 x 3.0 x 1.0 stock. Center the part in the stock.

3. Step one starts at the home position: X -1.0, Y 2.5, Z .5
   X0, Y0 is the lower left corner of the stock, Z0 is the top of the stock.

4. Perform roughing in two depths of passes taking .250 depth per pass. Leave .020 for a finish allowance. For the .5 dia hole, simply rough by drilling through with the 7/16 dia drill.

5. Provide a lead-in and lead-out for all finish passes. No plunging into material is allowed.

Hand in: This paper and graphic printout of part in isometric. Also, graphics file, job file, and code on a diskette.

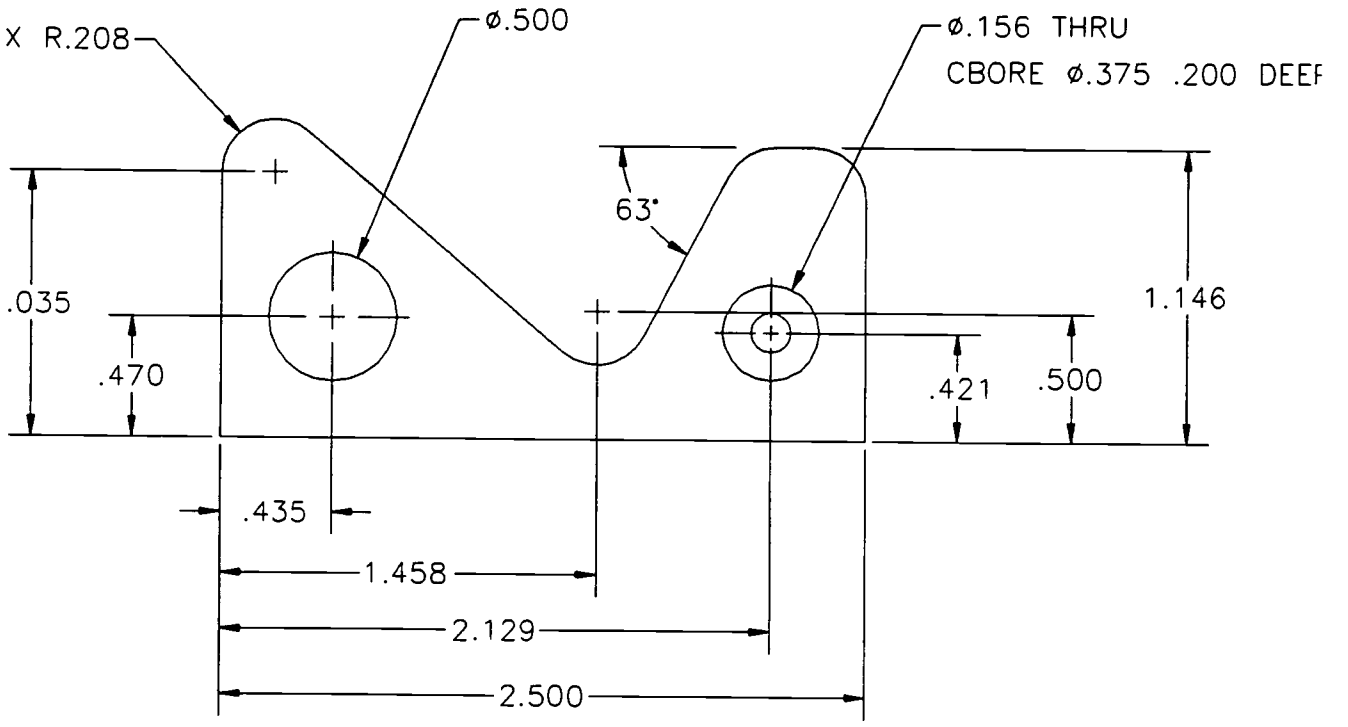

BEST COPY AVAILABLE

LSR-J5-LW2
Create and Edit Complex Part Profiles
Attachment 5: **MASTER** Laboratory Worksheet No. 2

Use SmartCAM to create the necessary tool paths to obtain CNC code required for manufacturing the part shown below. The material is 1018 steel.

1. You will need four steps using four tools:
   a. One .500 diameter endmill for roughing the outside and inside profiles: 4 flute, 80 SFPM, .003 IPT;
   b. One .250 diameter drill to prepare a hole in the .375 wide slot: 2 flute, 118° included angle, 70 SFPM, .002 IPR;
   c. One .500 diameter endmill for finishing the outside and inside profiles: 4 flute, 140 SFPM, .001 IPT; and,
   d. One .375 diameter endmill for cutting the slot: 2 flute, 80 SFPM, .002 IPT.

   All tools are HSS. All endmills are center cutting. Use 1 inch for each tool's preset length. Use your judgment for all other data.

2. Cut the part from 8.0 x 5.0 x .5 stock. Center the part in the stock.

3. Step one starts at the home position: X -1.0, Y 2.5, Z .5
   X0, Y0 is the lower left corner of the stock, Z0 is the top of the stock.

4. Perform roughing in one depth of pass taking the full .250 depth. Leave .020 on both the inside and outside profiles for the finish passes. For the .375 wide slot, drill through with the .250 dia drill to prepare a hole for the .375 dia endmill to plunge.

5. Provide a lead-in and lead-out for all finish passes.

Hand in: This paper and graphic printout of part in isometric. Also, graphics, job file, & code on disk.

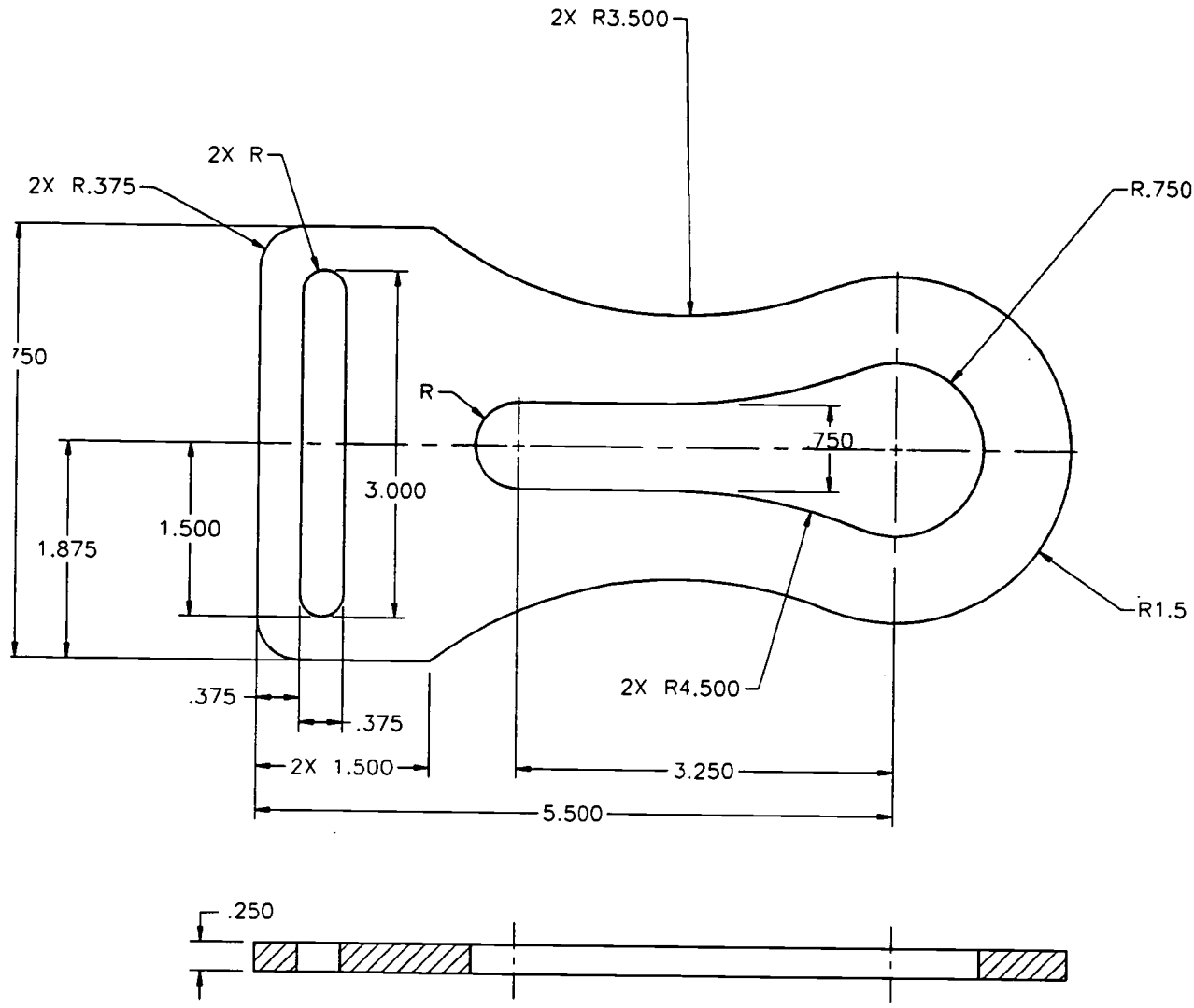
2X R3.500
2X R
2X R.375
R.750
750
R
.750
3.000
1.500
1.875
R1.5
2X R4.500
.375
.375
2X 1.500
3.250
5.500
.250

LSR-J6-HO
Perform Roughing, Drilling, and Counterboring
Attachment 1: **MASTER** Handout

Objective(s):

Upon completion of this unit the student will be able to:

a. Demonstrate how to perform face and pocket roughing;
b. Demonstrate how to perform island detection; and,
c. Demonstrate how to set hole tooling and properties.

Module Outline:

I. Perform Roughing, Drilling, and Counterboring
   A. Perform face roughing
   B. Perform pocket roughing
   C. Understand how to avoid islands in roughing
   D. Set up drills and counterbore tools
   E. Study the difference between full depth, tip depth, and spot diameter

---

Successful completion of this technical module will be based on the students' successful completion of the following components:

a. Demonstrate how to use the facing and pocket roughing commands;
b. Demonstrate how to set up for island detection;
c. Demonstrate how to set up drilling, counterboring, and spot drilling tools; and,
d. Demonstrate how to create hole geometry and determine when to use full, tip, and spot diameter depths.

LSR-J7-HO
Advanced Editing of Part Profiles
Attachment 1: **MASTER** Handout

Objective(s):

Upon completion of this unit the student will be able to:

a. Demonstrate how to move and copy elements;
b. Demonstrate how to rotate and rotate copy elements; and,
c. Demonstrate how to create symmetrical elements using mirror.

Module Outline:

I. Advanced Editing Of Part Profiles
   A. Move and copy elements
   B. Rotate and rotate copy elements
   C. Create symmetrical elements using mirror

ERIC

LSR-J7-LE
Advanced Editing of Part Profiles
Attachment 2: **MASTER** Laboratory Exercise

Successful completion of this technical module will be based on the students' successful completion of the following components:

1. Demonstrate how to use the move and move copy commands;
2. Demonstrate how to use the rotate and rotate copy commands; and,
3. Demonstrate how to use the mirror command.

LSR-J8-HO1
Edit Tool Paths
Attachment 1: **MASTER** Handout No. 1

Objective(s):

Upon completion of this unit the student will be able to:

a. Change tool path direction (REVERSE_ORDER);
b. Change where a profile begins. (PROF_START);
c. Change the order of machining events (SEQUENCE_MOVE); and,
d. Change the order of operation based on tooling (STEP_SORT).

Module Outline:

I. Edit Tool Paths
   A. Change tool path direction. (REVERSE_ORDER)
   B. Change the start of a profile (PROF_START)
   C. Change the order of machining events (SEQUENCE_MOVE)
   D. Arrange elements by tool. (STEP_SORT)

ERIC

LSR-J8-HO2
Edit Tool Paths
Attachment 2: **MASTER** Handout No. 2

Editing Practice

Create a job file with a .5 diameter endmill and work through the following exercise.

1. Use the **Rectangle** command to create the 6 X 4 Rectangle as shown in figure 1.

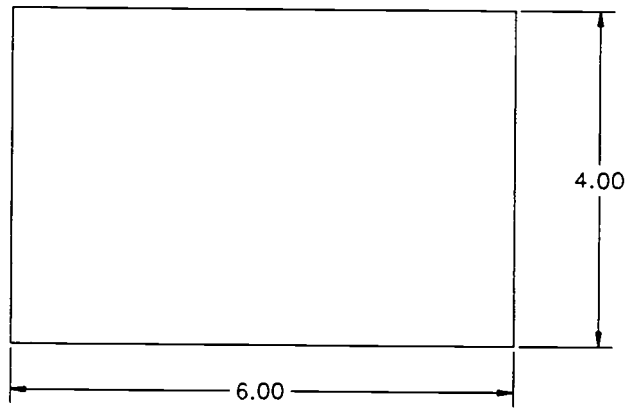

Figure 1

2. All a 1.00 diameter arc. First draw a full arc (i.e. circle), then use **Profile_Trim** to edit. Then, add chamfer as shown in figure 2.

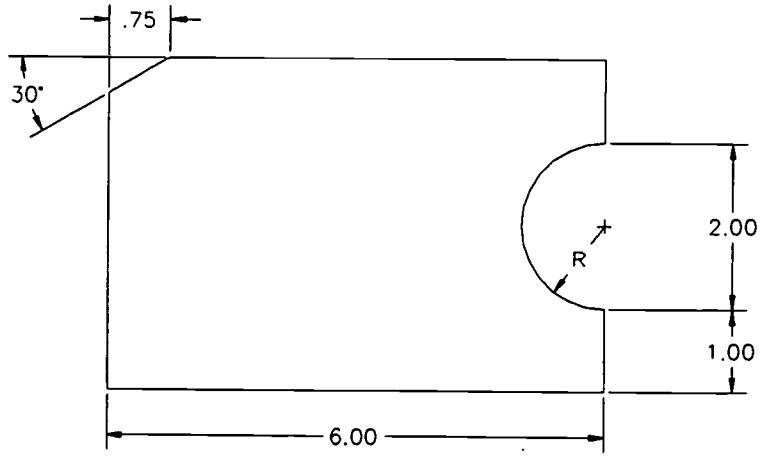

Figure 2

3. Use **Geo_Edit >> Modify** on two lines to create "house" as shown in figure 3.

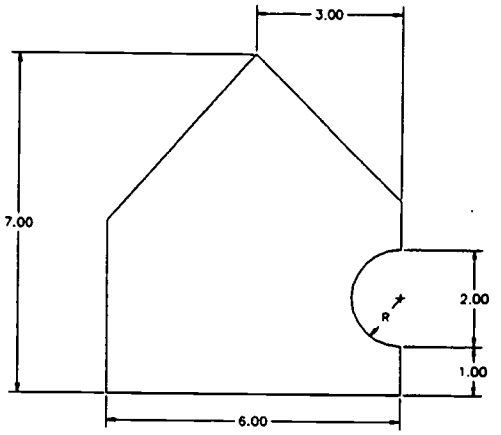

Figure 3

4. Mirror the object about X = 6.5 to create figure 4.

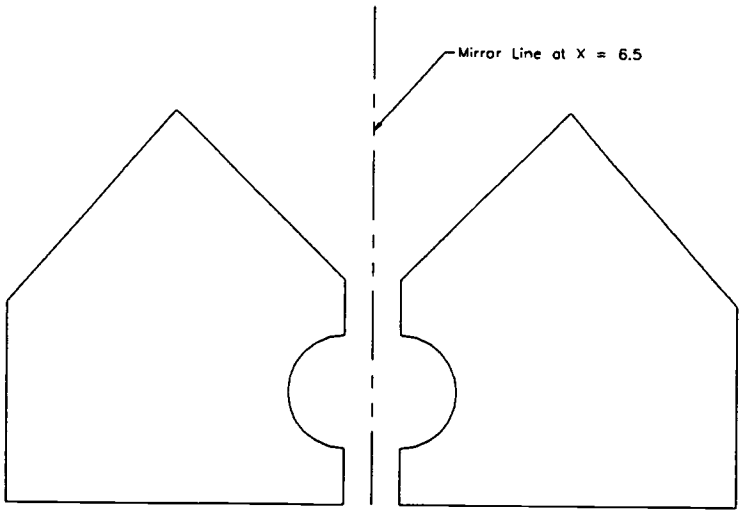

Figure 4

5. Use the **Rotate** command (making sure copy is on), then use **Move** to create figure 5.

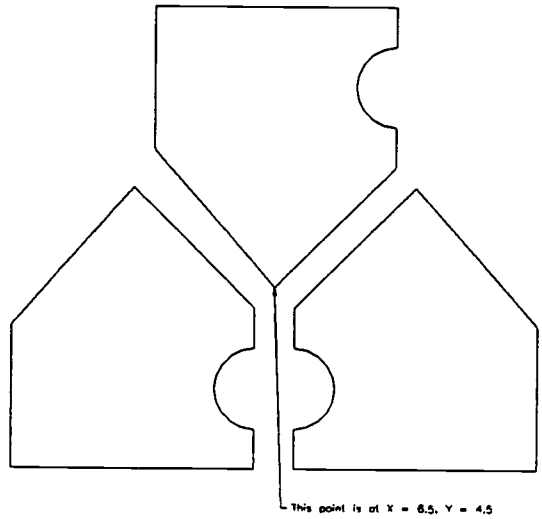

Figure 5

6. Note the current cut direction the three objects as shown in figure 6. Perform a **Show_Path** to verify.
   a. ***Make all objects go clockwise.*** Use **Edit >> Order Path >> Reverse Order.** Select any element in the object 1 profile to make this object go clockwise. Now, all three objects are going clockwise.
   b. ***Make object 3 go first, then 2, then 1.*** First Group all three objects. Now, **Edit >> Order Path >> Reverse Order.** Click on "Order Only" and click on "Group Reverse".

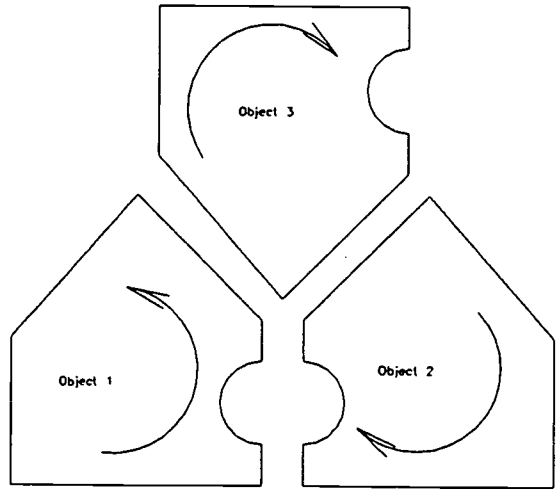

Figure 6

7. Move object 3 back to the peak of object 2 as shown in figure 7. Then,
   a. Use **Edit >> Order Path >> Prof_Start** and select the appropriate element such that the tool path for object 2 begins at the point shown in figure 7.
   b. Create the "figure 8" toolpath as shown in figure 7. First, group the elements in object 3 in the required order. Second, **Insert >> After >> element >>** select the appropriate element in object 2. Third, **Edit >> Order Path >> Sequence Move >> Go.**

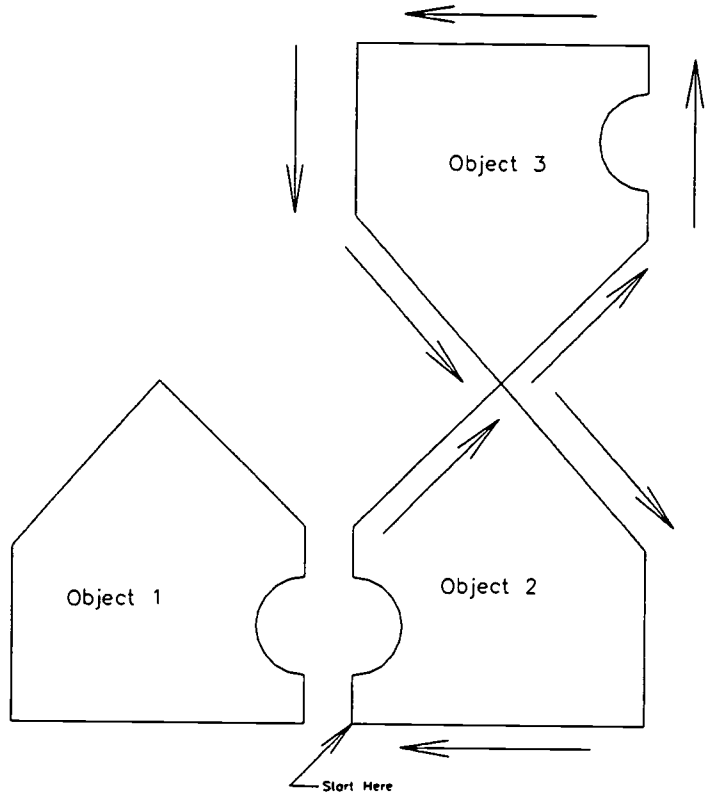

Figure 7

SmartCAM's Step_Sort command

(Printed from: Advanced 3-D Machining Reference Manual page 3-49)

Use Step Sort to resequence a group of elements or the entire database according to the steps or tools assigned to them. You can sort elements in the following ways:

1. Sort elements associated with a single step;
2. Sort elements associated with a single tool;
3. Sort all elements in the database according to the step order in the job operations setup;
4. Sort all elements in the database according to the tool order in the job operations setup;
5. Sort an active group according to the step order in the job operations setup; and,
6. Sort an active group according to the tool order in the job operations setup.

When you copy geometry to different locations, the order of events stays the same for each location. Use Step Sort to change the order of events so that one tool finishes all of its operations before SmartCAM indexes the next tool.

The following lists the different options from the Sort Step dialog box with an explanation as to how it works.

Sort Domain:

Active Group: Select Active Group to sequence only the active group.

Entire File: Select Entire File to resequence all elements in the database. Elements associated with layers will be sequenced before elements associated with steps.

Sort Single Step #:

Type the step number to sort, and press ENTER. All the occurrences of the step are sequenced after the first occurrence of the step in the database.

Sort Single Tool #:

Type the tool number to sort, and press ENTER. All the occurrences of the tool are sequenced after the first occurrence of the tool in the database.

All Steps:

Resequences all elements associated with steps, using the order of the steps in the job operations setup. All elements associated with a layer are sequenced at the start of the file.

All Tools:

Resequences all toolpath elements, using the order of the tools in the job operations setup. All elements associated with a layer are sequenced at the start of the file. Select the type of sequencing.

LSR-J8-LE
Edit Tool Paths
Attachment 4: **MASTER** Laboratory Exercise

Successful completion of this technical module will be based on the students' successful completion of the following components:

a. Demonstrate how to reverse the machining direction a profile;
b. Demonstrate how to change where a machining profile begins;
c. Demonstrate how to arrange the sequencing of machining events based on how the steps (tools) in the job file were created; and,
d. Demonstrate how to maneuver the sequencing of machining events by grouping, setting a new location in the data base, and initiating the Sequence Move command.

LSR-J9-HO1
Use Construction Layers in SmartCAM
Attachment 1: **MASTER** Handout No. 1

Objective(s):

Upon completion of this unit the student will be able to demonstrate how to establish and use construction layers to graphically create mathematical solutions for parts involving trigonometric measurements.

Module Outline:

I. Use Construction Layers in SmartCAM
   A. Discuss the use of layers in profile construction
      Note: Emphasis is placed on creating lines at an angle with known length
   B. Establish snap points using layers
   C. Trim profiles to "snapable" configurations

ERIC

Layers in SmartCAM

(Printed in part from: Advanced 3-D Machining Reference Manual)

The **On Layer** command appears in the **Insert** toolbox. **On Layer** indicates the layer with which the new geometry will be associated. SmartCAM will not generate code for geometry that is associated with a layer. Use On Layer to add graphic representation of material stock, fixtures, and other non-tool path geometry. In the case of construction geometry, you can build part geometry on a layer, and assign steps to it later. To assign step properties to layer geometry, place the geometry in the active group and use Property Change—Toolpath.

To create a new layer. Insert → On Layer → Click on "Add Layer".

Displays a dialog box enabling you to add a layer.

To create the new layer 5:

1. Enter the new Layer number, 5, and select a display Color for the layer. Select Line Style to change the default for Line Style.
2. Accept.

Any geometry now created will be assigned to layer 5.

Successful completion of this technical module will be based on the students' successful completion of the following components:

a. Demonstrate how to add a layer using **Insert**;
b. Demonstrate how to create lines at an angle with a known length;
c. Demonstrate how to use **Wall_Offset** to create profile construction; and,
d. Demonstrate how to use **Trim_Extend** as required to finalize geometry.

LSR-J9-LW
Use Construction Layers in SmartCAM
Attachment 4: **MASTER** Laboratory Worksheet

Use SmartCAM to create the necessary tool paths to obtain CNC code required for manufacturing the part shown below. The material is 1018 steel.

1. You will need four steps using four tools:
   a. One .375 diameter endmill for roughing: 2 flute, 80 SFPM, .002 IPT;
   b. One .250 diameter endmill for finishing: 4 flute, 140 SFPM, .001 IPT;
   c. One .125 diameter drill: 2 flute, 118° included angle, 70 SFPM, .005 IPR; and,
   d. One .250 diameter counterbore: 2 flute, 70 SFPM, .004 IPR.

   All tools are HSS. All endmills are center cutting. Use 1 inch for each tool's preset length. Use your judgment for all other data.

2. Cut the part from 2.7 x 2.7 x 1.0 stock. Center the part in the stock.

3. Step one starts at the home position: X -1.0, Y 2.5, Z .5
   X0, Y0 is the lower left corner of the stock, Z0 is the top of the stock.

4. Perform roughing in two depths of passes taking .250 depth per pass. Leave .020 for a finish allowance.

5. Provide a lead-in and lead-out for all finish passes. No plunging into material is allowed.

Hand in: This paper and graphic printout of part in isometric. Also, graphics file, job file, and code on a diskette.

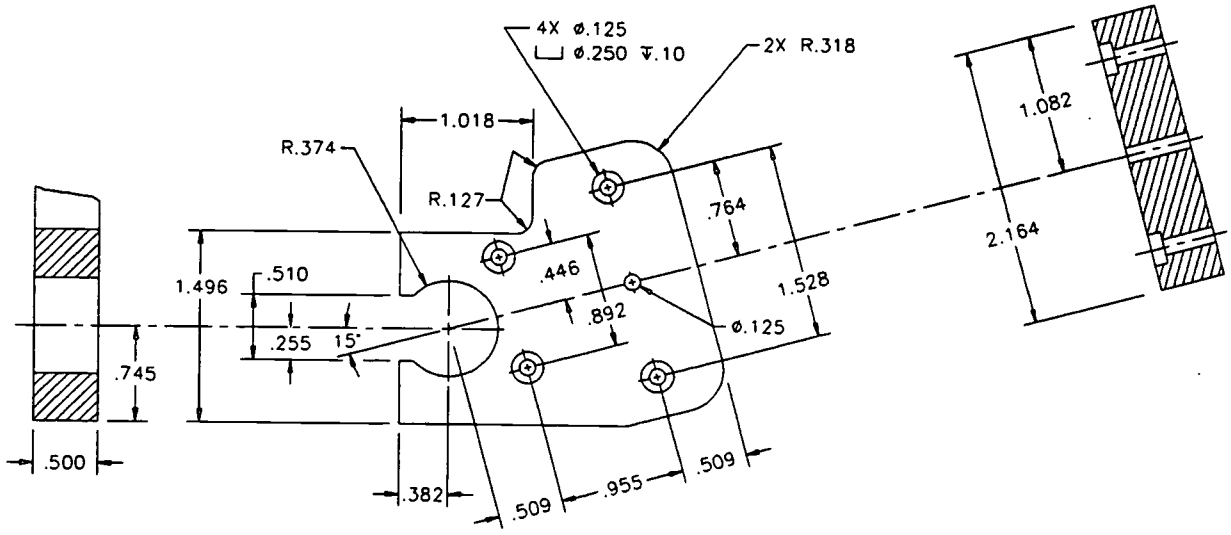
4X ø.125
⌴ ø.250 ↧.10
2X R.318
1.018
R.374
R.127
1.082
.764
2.164
1.496
.510
.446
.892
1.528
.255
15°
ø.125
.745
.500
.382
.509
.955
.509

LSR-J10-HO1
Perform User Commands and Machine Events
Attachment 1: **MASTER** Handout No. 1

Objective(s):

Upon completion of this unit the student will be able to:

a. Demonstrate how to utilize some of SmartCAM's built-in macros to facilitate the creation of multiple hole patterns; and,
b. Demonstrate how to change the feed rate of a tool.

Module Outline

I. Perform User Commands and Machine Events
   A. Create multiple hole patterns using line at angle (LAA)
   B. Create multiple hole patterns using GRID
   C. Change the tool feed rate (FEED_CHG)

Using GRID for Holes in a Grid Pattern

(Printed in part from SmartCAM Production Milling Reference Manual)

Use Grid to create a special user command for a grid-hole-pattern machine cycle. The machine cycle creates a series of holes in a defined row-and-column grid arrangement. The hole element that precedes the user command determines the properties of the grid holes. To produce accurate code, your machine must have grid machine cycle capabilities, and an @GRID section must exist in the template file for your machine. If the CNC machine does not have a special G-Code for handling a grid, use **Explode** to change the Grid user command into separate hole elements. SmartCAM inserts this new geometry in the database at the same location as the Grid user command and in the sequence it was created. Now, each hole will have a separate line of code, typically defined by G81 or equivalent.

Accessed from: Create → Machine Events → Grid. In the dialog box:

Field	How it works.
GRID Start Point	Entering the starting point to begin the hole pattern.
Level	Enter the position on the active work plane's Z axis to place the grid of holes. Available only when a hole-making tool is active or when you are inserting geometry associated with a layer.
Row Angle	Enter the absolute angle at which the pattern will be oriented.
Number of Holes in a Row	Enter the number of holes to place in each row.
Hole Spacing	Enter the incremental distance between the holes in each row.
Number of Rows	Specify how many rows to place within the model boundaries.
Row Spacing	Enter the number of rows to place in the grid.

Using LAA for Holes Equally Spaced along a Line

(Printed in part from SmartCAM Production Milling Reference Manual)

Use LAA to create a special user command for a line-at-angle (LAA) machine cycle. The machine cycle creates a series of holes equally spaced along a line. The hole element that precedes the user command determines the properties for the LAA holes. To produce accurate code, your machine must have LAA machine cycle capabilities and an @LAA section must exist in the template file for your machine.

If the CNC machine does not have a special G-Code for handling holes in a line, use **Explode** to change the LAA user command into separate hole elements. SmartCAM inserts this new geometry in the database at the same location as the LAA user command and in the sequence it was created. Now, each hole will have a separate line of code, typically defined by G81 or equivalent.

Accessed from: Create → Machine Events → LAA In the dialog box:

Field	How it works.
LAA Start Point	Enter the starting point to begin the hole pattern.
Level	Enter the position on the active work plane's Z axis to place the Line At Angle. Available only when a hole-making tool is active or when you are inserting geometry associated with a layer.
Angle	Enter the absolute angle of the hole pattern.
Number of Holes	Enter the number of holes on the line.
Hole Spacing	Enter the incremental distance between the holes.

Using Feed Change to Temporarily Change the Feed Rate of a Tool

(Printed in part from SmartCAM Production Milling Reference Manual)

Use Feed Change to create a feed-change user command in the database sequence you specify with the Insert toolbox. SmartCAM displays User Cmd in the list view and a leader pointing to the user command in the graphic view.

Enter a feed change at any appropriate database location. SmartCAM assigns the value you enter to the #FEED template word. You can modify the feed change user command (and other user commands that appear in the graphic view or list view) by using Modify.

Field	How it works.
Feed Change Point	Enter the location for the feed-change point in the model.
Level	Enter the position on the active work plane's Z axis to place the feed-change user command. Available only when a step is active.
Feedrate	Enter the feed rate to send to the machine.

Successful completion of this technical module will be based on the students' successful completion of the following components:

1. Demonstrate how to create patterns of holes using the LAA and GRID commands; and,
2. Demonstrate how to temporarily change the feed rate of a tool using FEED_CHG.

LSR-J10-LW
Perform User Commands and Machine Events
Attachment 6: **MASTER** Laboratory Worksheet

Use SmartCAM to create the necessary tool paths to obtain CNC code required for drilling the .250 diameter hole patterns shown below. The material is 1018 steel.

1. You will need one step using one tool:
   a. One .250 diameter drill: 2 flute, 118° included angle, 70 SFPM, .005 IPR.

      The tool is HSS. Use 1 inch for the tool's preset length. Use your judgment for all other data.

2. The 6 by 5 rectangle is the stock and requires no additional machining.

3. Step one starts at the home position: X -1.0, Y 2.5, Z .5
   X0, Y0 is the lower left corner of the stock, Z0 is the top of the stock.

Hand in: This paper and graphic printout of part in isometric. Also, graphics file, job file, and code on a diskette.

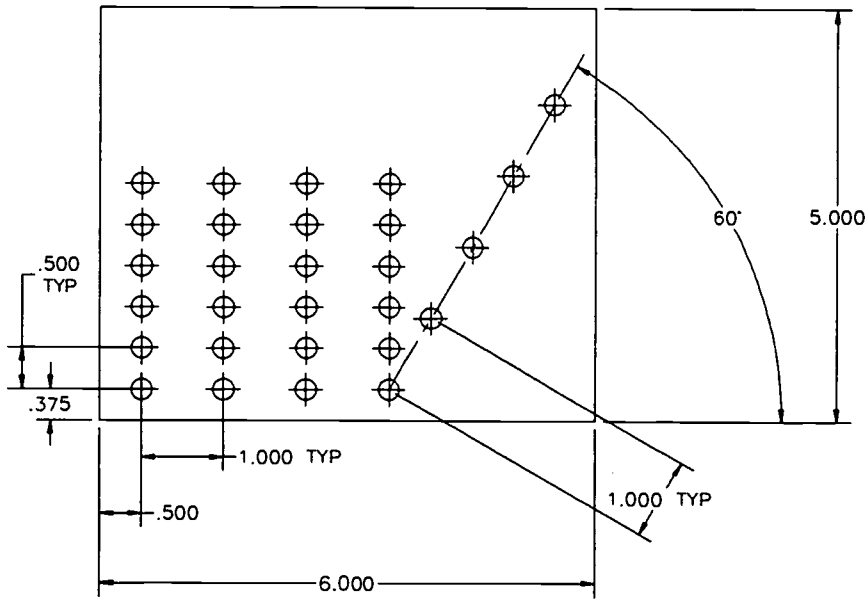

LSR-J11-HO
Create Families of Parts
Attachment 1: **MASTER** Handout

Objective(s):

Upon completion of this unit the student will be able to:

a. Demonstrate how to create part families utilizing the SmartCAM Macro command; and,
b. Demonstrate how to use and change variables in the macro program.

Module Outline:

I. Create Families of Parts
   A. Discuss the importance of macros
   B. Create variables to represent part geometry
   C. Record a macro
   D. Edit and use a macro

ERIC

LSR-J11-LE
Create Families of Parts
Attachment 2: **MASTER** Laboratory Exercise

Successful completion of this technical module will be based on the students' successful completion of the following components:

1. Demonstrate how to record a macro;
2. Demonstrate how to use variables within a macro; and,
3. Demonstrate how to edit and use a macro.

LSR-J11-LW
Create Families of Parts
Attachment 3: **MASTER** Laboratory Worksheet

Use SmartCAM to create two macros to serve for the family of parts as shown on the second page.

Macro 1 → Create the .MCL file to create the parts as shown.

Macro 2 → Create the .MCL file to create the parts as shown, except place the pocket designated by diameter "C" in the exact middle of the rectangle.

Each macro will begin with the job plan read in. That is, File ⇒ Load Job File (enter job plan name). Therefore, the first command will be "INSERT".

1. Make a job plan with the following tooling:
   a. One .375 endmill for roughing from outside stock;
   b. One .250 diameter endmill for roughing the pocket designated by diameter "C";
   c. One .250 diameter endmill for all finishing;
   d. One .250 diameter drill. Use a drill angle of 118°; and,
   e. Make each tool 1.5 inches long.

2. Set all speeds at 1700 RPM. Rough at 10 in/min, finish at 5 in/min, drill at 3 in/min.

3. Rough the part from stock which is .5 inches larger the rectangle dimensions A, B, and T. Center the part in the stock.

4. Do not include tool change points.

5. X0, Y0 is the lower left corner of the stock, Z0 is the top of the stock.

6. Perform roughing in two sets of passes taking T/2 per pass.

7. Leave .020 on all sides of the part for the finish pass. Do not allow for a finish on the bottom of the pocket.

8. Do not provide a lead-in and lead-out for the finish pass.

9. End the Macro with the part in ISO and a View Full.

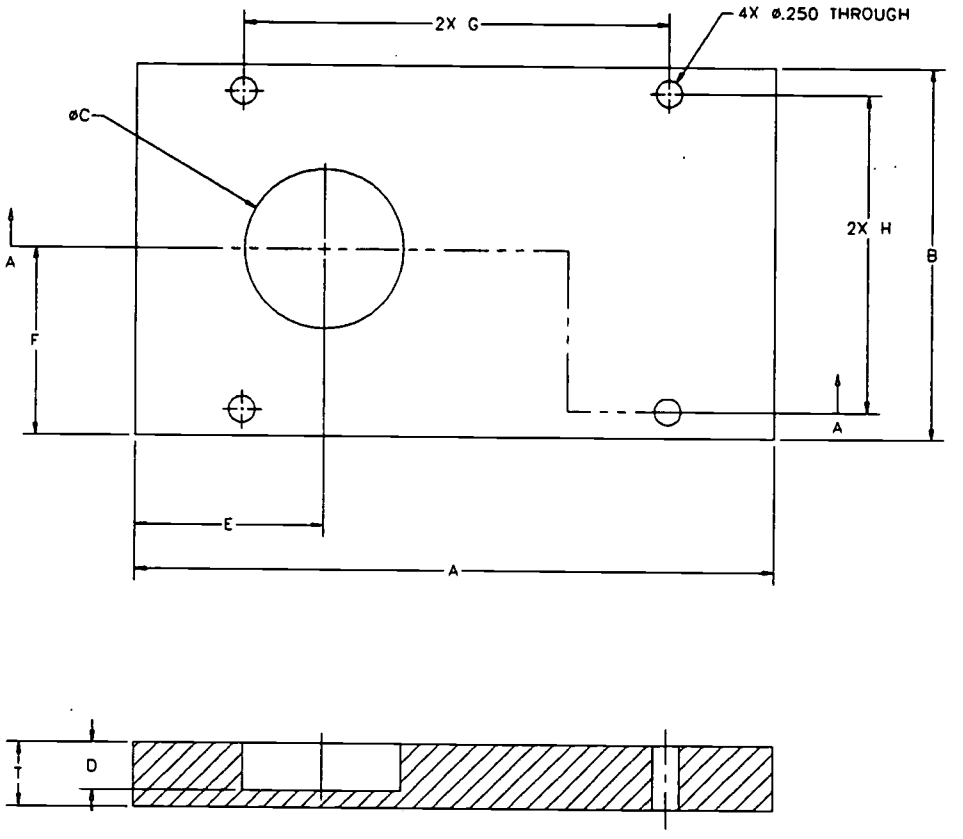

SECTION A–A

Note: Dimension G and H are centered to Dimensions A and B respectively.

Family of Parts Table

	T	A	B	C	D	E	F	G	H
Part 1	.60	6.00	3.5	1.5	.44	1.77	1.77	4.0	3.0
Part 2	.8	8.00	5.5	2.0	.60	2.36	2.95	5.0	4.5

LSR-J12-HO1
Perform CAD/CAM Integration
Attachment 1: **MASTER** Handout No. 1

Objective(s):

Upon completion of this unit the student will be able to:

a. Demonstrate how to create .DXF files in AutoCAD; and,
b. Demonstrate how to perform .DXF file translation into SmartCAM.

Module Outline:

I. Perform CAD/CAM Integration
   A. Create .DXF files in AutoCAD®
   B. Discuss the importance of layers in AutoCAD®
   C. Perform .DXF file translation in SmartCAM

ERIC

DXF Importing in SmartCAM .v9

From main SmartCAM icon cluster, enter **DXF CAM Connection.**

Click on **Settings** → **Conversion** → **Misc_Options**

For layers to be translated: Enter the desired layer numbers to be translated or leave as * (all layer will be transferred). You can separate layers numbers with commas, example: 1,2,4 would translated into AutoCAD layers 1 2 and 4.

Quit back to main DXF menu.

Select **From_CAD**

For AutoCAD DXF file name: Enter DXF file (you do not need to include the extension). Please note you can hit F3 to select the file name.

For Destination Shape file: Enter the name of the SmartCAM file you wish to create (example GMLAB6). Please note that SmartCAM will assign a .SH3 extension to the file name. ***DO NOT*** try to change this to a .PM4!!

For Job Plan file name: Type C:\SM9\SHARED\DEFAULT <enter>, the translation is performed. (Please note you can hit F3 to select the file name. Select the file then OK the dialog box, the translation is performed.)

Leave the cam connection menu.

Start a SmartCAM session by entering Advanced 3D machining in the ususal manner.

File → **Open** → in the dialog box: Change **File type** to (3-D .SH3) → enter the file name you used in step 7. *Note: You may use File Select.*

You will get an error message claiming the job file is not on file, do you want to continue processing? Just click on "Yes" and the file is drawn on the screen. You will notice that all geometry is on a layer!!

File → **Planner**. Create your job plan in the usual manner.

Do a **Save As**. This will save your files as .JOF and .PM4 as we are used to!!

Property change as required to produce the part.

LSR-J12-LE
Perform CAD/CAM Integration
Attachment 3: **MASTER** Laboratory Exercise

Successful completion of this technical module will be based on the students' successful completion of the following components:

1. Demonstrate how to Create .DXF files in AutoCAD®;
2. Demonstrate how to set up or modify AutoCAD® layers for successful file translation; and,
3. Perform .DXF file translation in SmartCAM®.

LSR-J12-LW
Perform CAD/CAM Integration
Attachment 4: **MASTER** Laboratory Worksheet

Using the figure provided to you by the instructor, create an AutoCAD drawing. Save the file in DXF format. Translate the DXF file into a SmartCAM SH3 file as outlined in LSR-J12-HO2. This figure may be created as a mill part in SmartCAM's Advanced 3D Machining Module or as a laser part using SmartCAM's Advanced Fabrication Module.

Once in SmartCAM's graphic screen, create an appropriate job file, edit the geometry as needed and create CNC code.

LSR-J13-HO1
Perform Code Generation
Attachment 1: **MASTER** Handout No. 1

Objective(s):

Upon completion of this unit the student will be able to:

a. Discuss how a code generator works;
b. Discuss the function of the Machine file (.SMF);
c. Discuss the function of the Template file (.TMP); and,
d. Modify code generators.

Module Outline:

I. Perform CAD/CAM Integration
   A. Study how a code generator works
   B. Study the Machine file (.SMF)
   C. Study the Template file (.TMP)
   D. Study how to modify code generators

ERIC

How SmartCAM Uses Four Files to Generate CNC Code

Job File: .JOF

Sets Machine
Defines Tools

Machine File: .SMF

Sets Machine Parameters

Graphic Model: .PM4

Sequential Manufacturing
Data Base: All Machine
Motion

Template File: .TMP

Sets the syntax for CNC Code

Code

LSR-J13-LE
Perform Code Generation
Attachment 3: **MASTER** Laboratory Exercise

Successful completion of this technical module will be based on the students' successful completion of the following components:

a. Discuss the four files SmartCAM uses to generate code;
b. Describe a machine file;
c. Describe a template file; and,
d. Demonstrate code file modifications for machine and template files.

U.S. DEPARTMENT OF EDUCATION
Office of Educational Research and Improvement (OERI)
Educational Resources Information Center (ERIC)

NOTICE

REPRODUCTION BASIS

☐ This document is covered by a signed "Reproduction Release (Blanket)" form (on file within the ERIC system), encompassing all or classes of documents from its source organization and, therefore, does not require a "Specific Document" Release form.

☒ This document is Federally-funded, or carries its own permission to reproduce, or is otherwise in the public domain and, therefore, may be reproduced by ERIC without a signed Reproduction Release form (either "Specific Document" or "Blanket").